6.4 MECHANICAL, ELECTRICAL, AND PLUMBING COMPONENTS

6.4.1 MECHANICAL EQUIPMENT

6.4.1.3 HVAC EQUIPMENT WITH VIBRATION ISOLATION

This includes HVAC equipment, typically of sheet metal construction, that is floor- mounted with vibration isolators to prevent the transmission of mechanical vibrations into the building. Current codes require anchorage for all equipment weighing over 400 pounds, equipment weighing over 100 pounds that are subject to overturning, and items weighing over 20 pounds that are mounted more than 4 feet above the floor.

TYPICAL CAUSES OF DAMAGE

- Vibration isolated equipment is particularly vulnerable to earthquake damage unless some type of snubbers, bumpers, or vendor-supplied restraints are used. Open and housed springs do not have adequate capacity to resist shear and uplift.
- Items can slide, tilt, overturn, or fall.
- Internal components may be damaged by shaking.
- Connections of fuel lines, electrical lines or ductwork may be damaged; machinery may cease to function due to misalignment, failure of the isolators, or internal damage.

Damage Examples

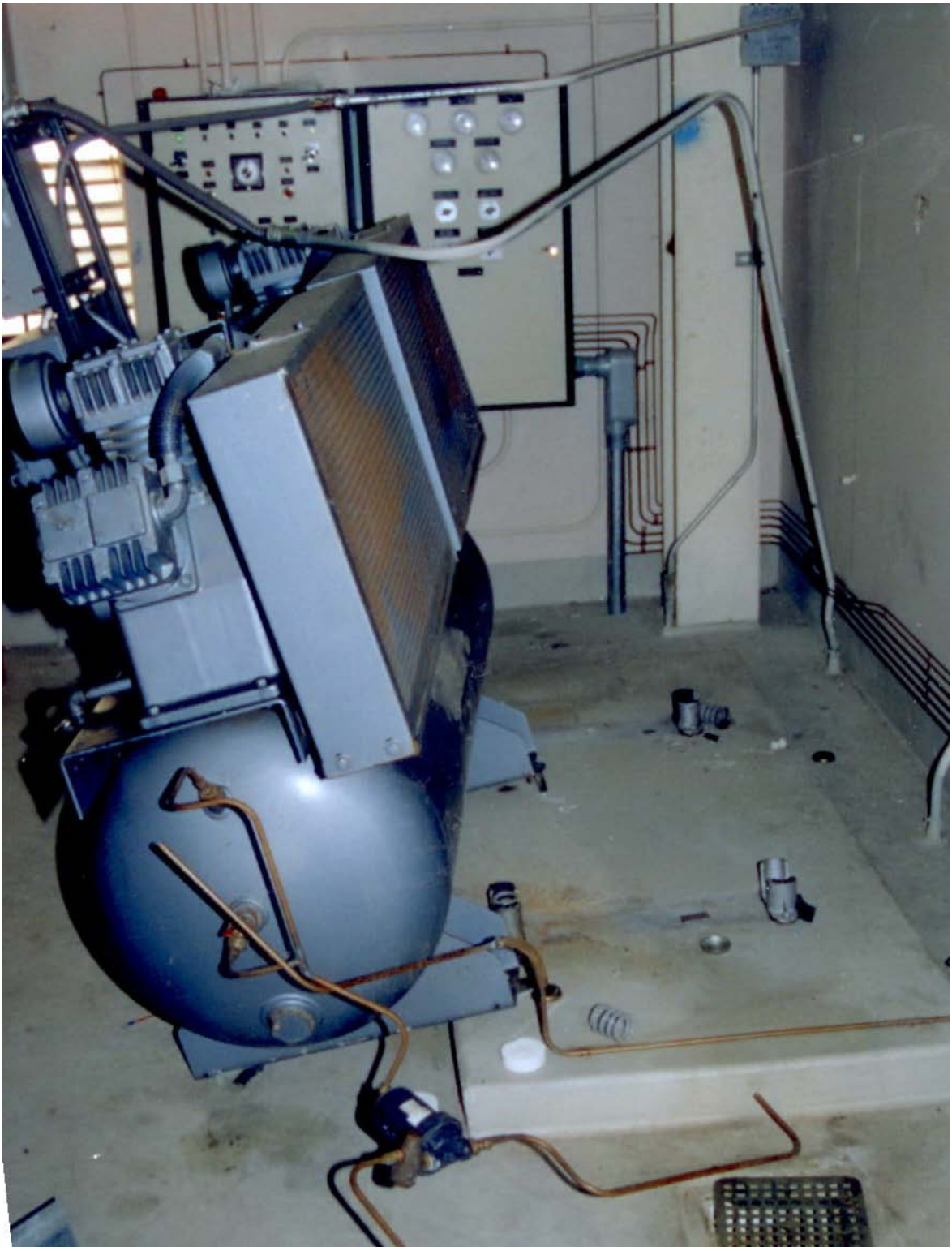

Figure 6.4.1.3-1 Failure of compressor mounted on vibration isolators in the 1994 Northridge Earthquake (Photo courtesy of Wiss, Jenney, Elstner Associates).

Figure 6.4.1.3-2 Failure of pump mounted on three vibration isolators and damage at wall penetration (Photo courtesy of Mason Industries).

Figure 6.4.1.3-3 Failure of an entire support assembly including vibration isolators (Photo courtesy of Mason Industries).

Figure 6.4.1.3-4 Rooftop equipment on isolators collapsed onto skid (Photo courtesy of Mason Industries).

SEISMIC MITIGATION CONSIDERATIONS

- Two methods are used for anchoring floor-mounted equipment on vibration isolators:
  1. Open springs used in conjunction with snubbers or bumpers.
  2. Restrained springs with rated capacity to resist the anticipated seismic shear and uplift.

- Rated housed springs with vertical travel limits should be used for seismic restraint applications.
- Flexible connections must be provided for fuel lines and piping.
- Refer to FEMA 412 *Installing Seismic Restraints for Mechanical Equipment* (2002) and FEMA 414 *Installing Seismic Restraints for Duct and Pipe* (2004) for additional information and details.
- HVAC equipment or other items required for use in a hospital or essential facility would be classified as designated seismic systems and may require engineering calculations, equipment certification and special inspections. Check with the jurisdiction for specific requirements.

Mitigation Examples

Figure 6.4.1.3-5 Restrained springs used to support heavy equipment (Photo courtesy of Mason Industries).

Figure 6.4.1.3-6 Open springs and snubbers used to support equipment (Photo courtesy of Mason Industries).

Figure 6.4.1.3-7 Seismic shake table testing of an air-handler unit and vibration isolation restraint system as part of the MCEER-ASHRAE project (Photos courtesy of André Filiatrault, MCEER).

Mitigation Details

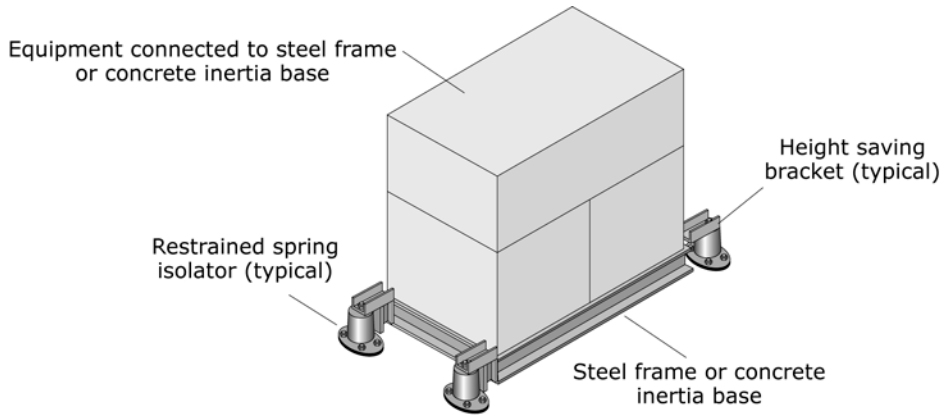

Supplemental base with restrained spring isolators

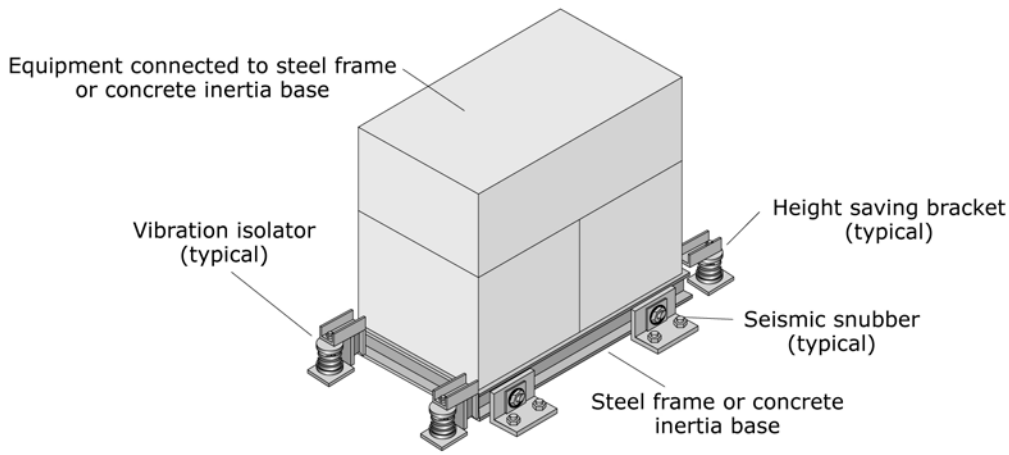

Supplemental base with open springs and all-directional snubbers

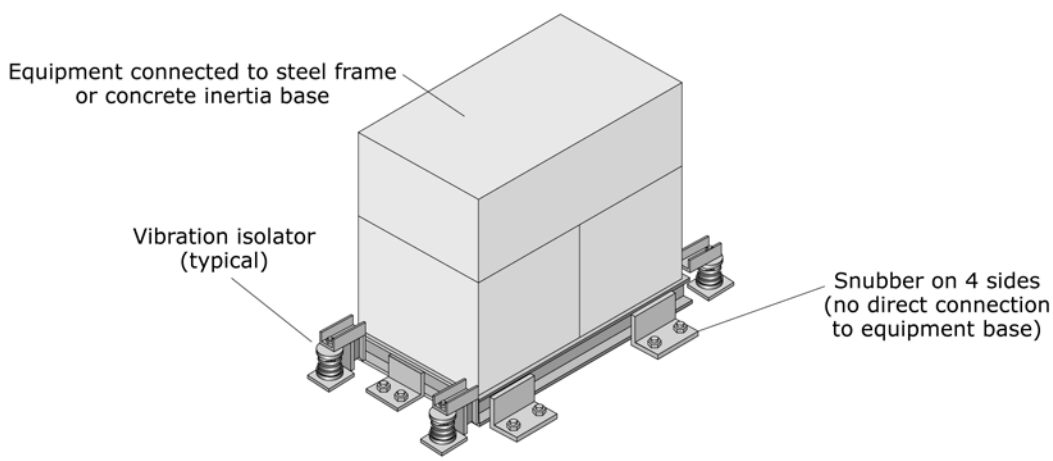

Supplemental base with open springs and one-directional snubbers

Figure 6.4.1.3-8 HVAC equipment with vibration isolation (ER).