Marshall Fire Mitigation Assessment Team: Wildfire-Resilient Detailing, Joint Systems, and Interfaces of Residential Building Components

June 2023

FEMA

DR-4634

This page intentionally left blank

Table of Contents

1. Introduction

On December 30, 2021, a wind-driven wildfire affected over 2,000 residential structures and several commercial facilities in unincorporated Boulder County, the City of Louisville, and the Town of Superior, Colorado. Data gathered after the fire highlighted several vulnerabilities at the interfaces and joints of exterior building components, that likely provided an avenue for embers, flames, and hot gases to penetrate the interior spaces of homes leading to significant damage or total loss. This document provides builders, contractors, and other design professionals with information on design strategies and construction practices to reduce the risk of home ignition due to vulnerabilities at the joints and interfaces of exterior building components.

Because of the unique nature of the incident, where extreme winds coupled with long term drought, high temperatures, and limited wildfire regulatory adoption, a fast-moving low-intensity grass fire became a highly destructive urban fire directly and indirectly impacting several communities and greater Boulder County area. The Federal Emergency Management Agency (FEMA) deployed its first-ever wildfire Mitigation Assessment Team (MAT) to evaluate building performance during the fire. The MAT was deployed to Louisville, Superior, and unincorporated areas in Boulder County, Colorado, to evaluate damaged homes and commercial structures. MAT members evaluated components and systems of primarily residential structures to determine the effectiveness of various building materials, design, and construction practices for wildfire resiliency. The MAT used the information gathered to evaluate how wildfire-urban interface (WUI) building codes and standards, as well as design, construction, and defensible space practices can be improved to increase community wildfire resilience. This is important as the landscape is continuously evolving due to climate change and putting more communities at risk.

2. Purpose

This document provides information on ways to reduce the vulnerability of residential structures to wildfire ignition due to windborne embers, hot gases, and flames penetrating common detailing joints and building component interfaces that exist throughout the exterior envelope of a building. This document provides information on measures that builders, contractors, and other design professionals can take to “seal” gaps at joints and retrofit building components and interfaces on the exterior surfaces. While the primary focus of this document is to provide guidance on retrofitting existing residential homes, many of the recommendations for increasing wildfire resiliency of common details, joint systems, and building component interfaces would also be applicable to new construction and commercial buildings.

3. Key Issues

Buildings are comprised of a combination of elements, components, and built-up assemblies (e.g., foundation, columns, walls, roofs, windows, doors, floor systems, façade systems) that, when connected, result in joints or spaces at the interfaces to accommodate construction tolerances and building movements. For interior building components, fire-resistive joint systems (such as blocking

in a wall cavity) are typically provided to protect the joints or spaces within or between components from interior fire and smoke spread. However, for most residential construction (e.g., single-family housing, low- and medium-density housing), the exterior envelope of the building is not typically required to achieve a fire-resistance rating unless the fire separation distance to an adjacent lot or building is five feet or less. Additional allowances are permitted where the residential buildings or subdivisions are (interior) sprinklered[1].

This section highlights key issues with current wildfire safety design and construction practices at the joints and interfaces of building components throughout the exterior building envelope.

3.1. Presence of Gaps at Joints and Interfaces

Detailing at joints and interfaces of building components throughout the exterior envelope of a building or residence (e.g., foundation-to-wall siding interface, window-to-wall joints, skylight-to-roof joints, chimney-to-roof joints, joints at roof valleys) often have gaps or spaces at the interfaces between them, leaving these areas vulnerable to ember accumulation or intrusion.

Gaps in the exterior envelope of the building can lead to embers penetrating into combustible interstitial spaces of exterior walls and roof systems (see Figure 1). These spaces do not typically contain any kind of fire detection to notify building occupants of a fire or suppression systems to extinguish a fire. As such, a fire in combustible interstitial spaces due to ember intrusion can go unnoticed for long periods, allowing the fire to grow to uncontrollable levels before being detected.

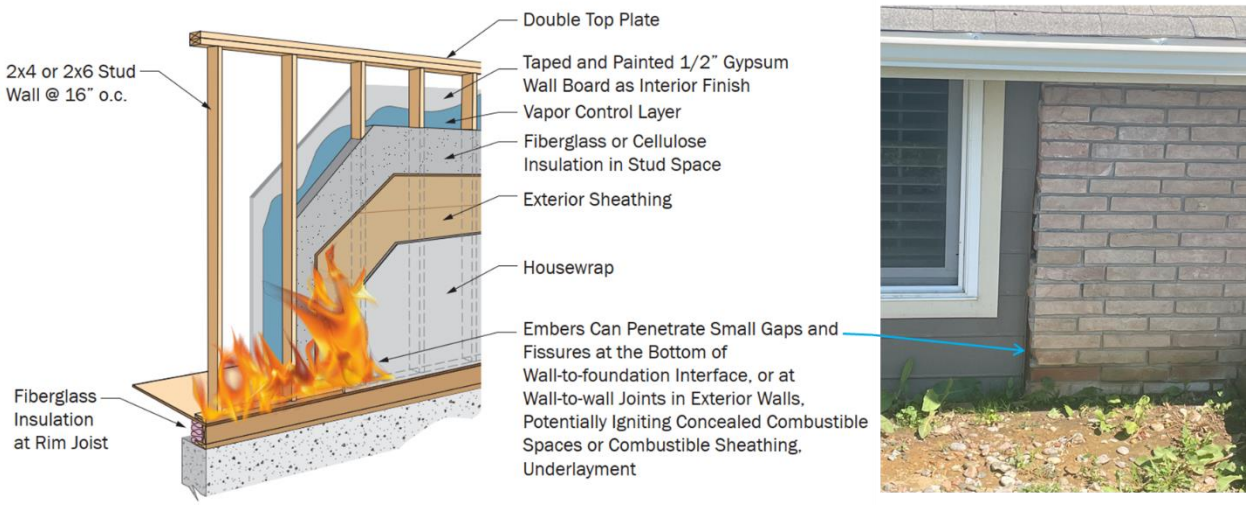

Figure 1. Example of gaps in common exterior wall construction (e.g., interfaces of wall systems, butt joints between siding, bottom-of-wall to foundation details) that can lead to ember penetration, and potential fire in combustible interstitial spaces. Note: At butt joints of exterior siding, embers may penetrate these joints leading to ignition of exterior combustible cladding before burning into the wall cavity.

[1] Refer to the International Residential Code with local amendments for details.

The gaps created by joints also create spaces for combustible debris to accumulate (e.g., leaf litter, dust) over time, creating a fuel source within the interstitial spaces, gaps, or joints. These gaps can be in areas that are not easily accessible, which make it easier for combustible debris to accumulate unnoticed. During a wildfire event, embers can penetrate the gaps, readily igniting any combustible debris that may have accumulated. This could lead to ignition of the exterior cladding (where combustible) before burning into the interior wall cavity. Note: Even in joints or gaps where combustible debris does not readily accumulate (e.g., vertical gaps/joints), embers can still become lodged in the gaps and provide a potential source of ignition where combustible cladding or other combustible construction materials are present.

Similarly, gaps in the exterior envelope of various roof components and details (e.g., edge of roof, around fire-rated or protected vents, open eave rafter, or joist blocking details) can lead to embers penetrating combustible attic spaces (see Figure 2). Attics spaces can typically contain large amounts of combustible surfaces and stored goods, accumulated dust and debris, and other materials that can readily ignite from embers if they penetrate gaps, joints, or interfaces at the roof-attic envelope. In addition, attics in residential homes do not typically contain fire detection or suppression systems even if the home is provided with a residential sprinkler system. In the event an interior building fire ignites in the attic space due to ember intrusion, the fire will typically go unnoticed and potentially lead to total building loss.

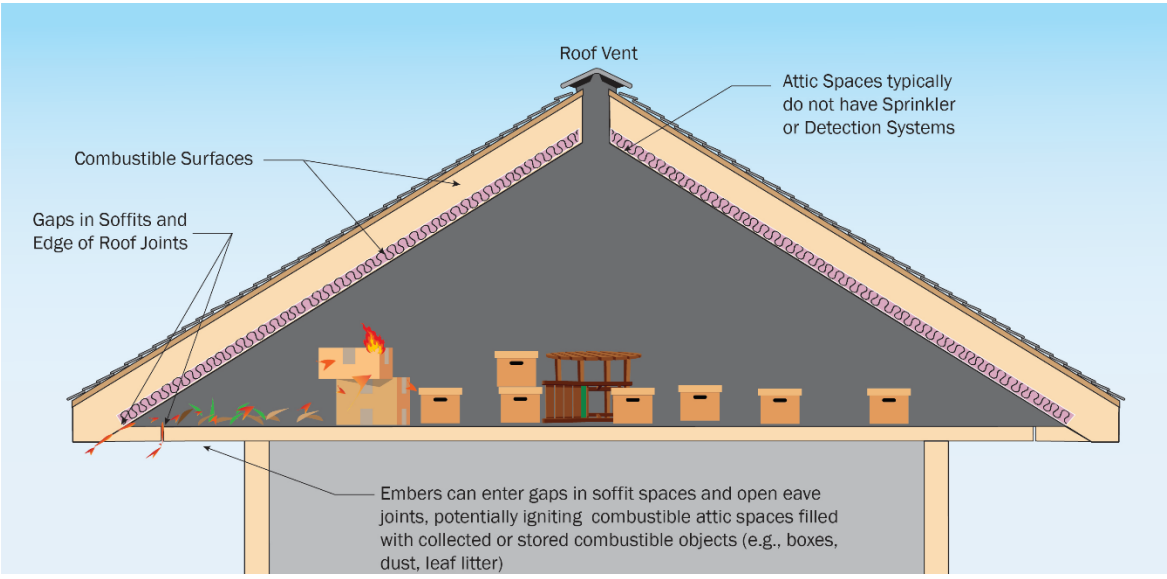

Figure 2. Example of gaps in open eaves, soffit spaces and edge of roof construction leading to ember penetration and potential ignition of various combustible surfaces, collected materials or storage goods common in attic spaces.

3.2. Combustible Debris and Ember Accumulation at Joints and Interfaces

Certain types of joints and interfaces (e.g., door-to-wall, window-to-wall, wall-to-wall, roof-to-roof joints), in particular combustible or non-fire rated joints, create areas where vegetative debris and embers can accumulate (see Figure 3) potentially leading to ignition of surrounding combustible building components. Door-to-wall and window-to-wall joints are often comprised of combustible

materials where debris and embers can collect. In the event embers collect or get lodged at these joints (whether horizontal or vertical joints) ignition of vegetative debris or surrounding combustible trim, cladding or other construction materials is possible, and can eventually lead to ignition of interior wall cavities. For roof-to-roof joints, where the roof system is not fire-rated or Class A (such as for wood shingle roofs), debris and ember accumulation can lead to ignition of the roof covering itself and potentially any combustible underlayment, which may eventually lead to fire penetrating into the roof or attic space.

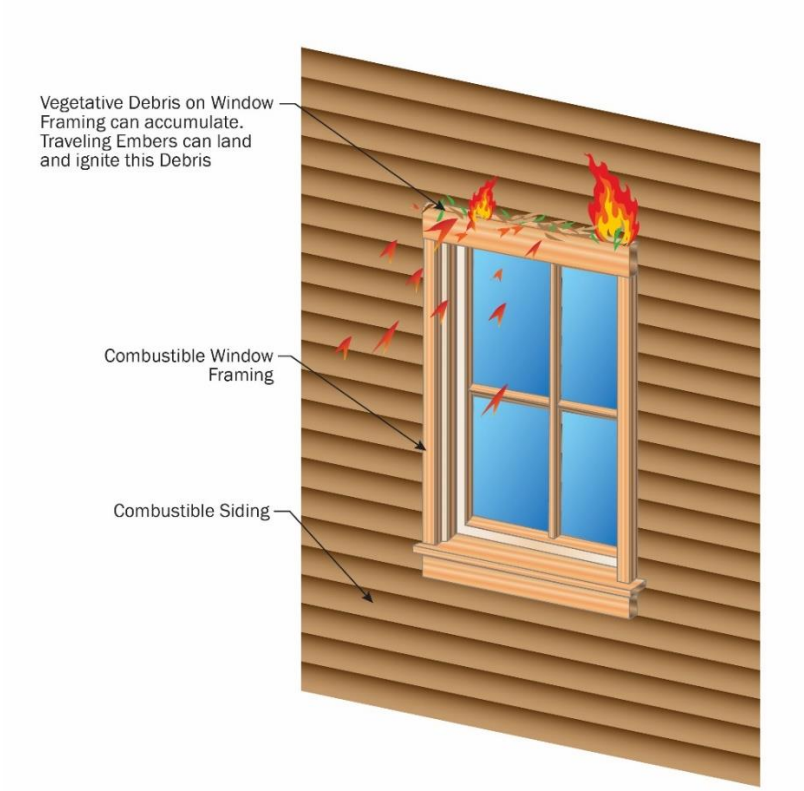

Figure 3. Vegetative debris (e.g., pine needles) and embers can accumulate at window-to-wall joints, as well as other joints throughout the exterior envelope of a home.

3.3. Combustible Debris and Ember Accumulation Adjacent to Roof-to-Wall Siding Interfaces

Various roof-to-wall joints and interfaces in the roof envelope oftentimes create areas where vegetative debris and embers accumulate creating major sources of ignition vulnerability (see Figure 4). Most roof joints and interfaces proximate to dormers and other wall systems (at roof level) accumulate vegetative debris throughout the year (see Figure 3). During a fire event, embers will also accumulate in these locations oftentimes leading to ignition of the vegetative debris and potential ignition of adjacent combustible dormer or wall siding. As shown in Figure 4, both images depict a Class A roof comprised of fire rated asphalt composition shingles, where vegetative debris has collected in close proximity to a non-fire rated dormer or wall system. In a fire event, embers can readily ignite the debris, and while unlikely lead to breach of the fire rated roof system, will result in a

flaming exposure to the adjacent non-fire rated siding, potentially leading to ignition of not only the cladding but also the interior wall assembly.

Figure 4. Vegetative debris (e.g., pine needles) and embers can accumulate at roof valleys (left, Source: NFPA®) and at the base of the wall on the roof of this split-level house (right, Source: Stephen Quarles).

3.4. Lack of Fire Test Standards for Joint Systems exposed to Wildfires

Currently, there are no standardized fire tests for joint systems or interfaces of exterior building components, assemblies or "systems" exposed to a "standard wildfire" exposure. Existing fire test standards for joint systems found in building and fire codes are limited to ASTM E119 (Standard Test Methods for Fire Tests of Building Construction and Materials) exposure conditions, which is characteristic of interior building fires primarily comprised of cellulosic materials. While the ASTM E119 standard fire exposure is considered severe (i.e., reaching 1000° Fahrenheit in 5 minutes, 1700° Fahrenheit in 1 hour and so on), it does not consider the direct effects of embers on performance of tested components, assemblies, or systems. Note: Some performance criteria in ASTM E119 permit small fissures and gaps in wall and floor assemblies provided they do not result in ignition of a cotton pad on the unexposed (non-fire) side of the testing apparatus. The cotton pad test was designed for assessing small, intermittent flames, which may not be equivalent to the fire-flow mechanisms that embers can introduce when penetrating membranes.

3.5. Lack of Wildfire-Resistive Joint Systems Products

Several catalogs (e.g., Underwriters Laboratory, Gypsum Association) of "listed" fire resistive joint systems, products, and fire-rated assemblies are available for various interior building components, systems, and assemblies. These catalogs provide homeowners, builders, building officials, and design professionals with options for achieving fire resistive construction. No equivalent set of catalogs at the national level exist for exterior building components and associated joints, detailing or interfaces exposed to wildfires in combination with weathering pre-tests (Note: California has state-approved WUI products, but there are limited joint and other interface detailing products specific to WUI). This limits the ability for design professionals, contractors, and homeowners to select and properly install building components, products, and systems that can reliably achieve fire resistance to wildfire exposures.

3.6. Limited access for Joint Inspections and Maintenance

Joint systems and construction details at component interfaces throughout the exterior envelope of a building are often difficult to physically access (e.g., roof joint systems) and visually inspect, particularly when systems or components are hidden behind exterior coverings, weather systems, and other architectural features. This can make enforcement, inspections, and long-term maintenance of joint systems and interface detailing particularly challenging. These instances, where joints and interfaces are inaccessible and difficult to maintain on an annual basis to reduce accumulation of vegetative debris or prevent ember accumulation, are some of the critical areas of a building envelop where non-combustible or fire-resistant surfaces and joints systems should be prioritized.

Definitions

- **Fire-resistance rating** –The period of time a building element, component or assembly maintains the ability to confine a fire, continues to perform a given structural function, or both, as determined by fire tests or methods based on fire tests.
- **Fire-resistant joint system** – An assemblage of specific materials or products that are designed, tested and fire-resistance rated in accordance with a standard fire test to resist for a prescribed period of time through joints made in or between fire-resistance rated assemblies (IBC).
- **Fire-resistive construction** – Fire-resistive construction is construction that has been designed and tested to withstand a certain amount of fire exposure. Fire-resistive construction is typically given a fire-resistance rating as determined by fire tests or methods based on fire tests.
- **Firestopping Product** – Firestopping is a component of a firestop system, which is designed to seal an opening into or through a fire-resistance rated assembly. These products help to reduce the amount of smoke and embers that could potentially penetrate walls (Knott, 2019).
- **Membrane-penetration firestop system** – An assemblage consisting of a fire-resistance-rated floor-ceiling, roof-ceiling or wall assembly, one or more penetrating items installed into or passing through the breach in one side of the assembly and the materials or devices, or both, installed to resist the spread of fire into the assembly for a prescribed period of time.
- **Through-penetration firestop system** – An assemblage consisting of a fire-resistance-rated floor, floor-ceiling, or wall assembly, one or more penetrating items passing through the breaches in both sides of the assembly and the materials or devices, or both, installed to resist the spread of fire through the assembly for a prescribed period of time.

4. Detailing at Joints and Interfaces

While wildfire-specific fire test standards and associated "listed" WUI building products are still limited, there are actions that still can be taken based on best practices to increase wildfire resiliency of joints and other building component interfaces throughout the exterior envelope of a building. The guidance below targets new construction and retrofits to existing buildings, detailing various actions for key building components that are commonly found in residential construction. See Figure 5 for an overview of building envelope locations.

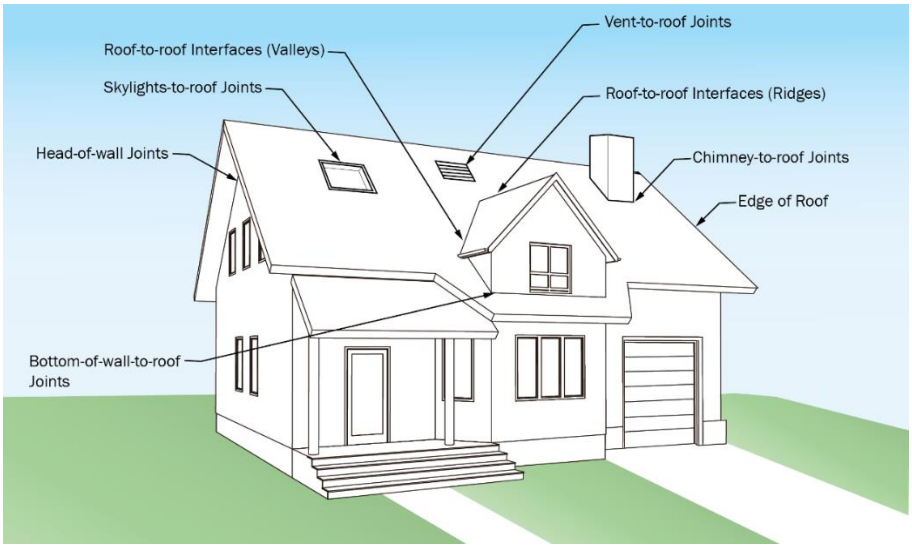

Figure 5. Various locations of vulnerable joints, penetrations, and interfaces throughout the exterior envelope of a residential structure to wildfires.

4.1. Roof Joints and Detailing Considerations

4.1.1. ROOF JOINTS AT THROUGH PENETRATIONS – CHIMNEYS, SKYLIGHTS, ROOF VENTS

Roof assemblies for residential buildings incorporate a range of construction features that introduce through-membrane penetrations of the entire roof assembly (e.g., chimneys, skylights, vents). The following are recommended details for improving the resiliency at the joints of through-membrane penetrations of roof systems.

Where chimneys are constructed with an exterior chase comprised of combustible siding or other combustible materials (see Figure 6), install noncombustible metal flashing and counter flashing that protects the roof-to-chimney chase joint for at least 6 vertical inches above the roof surface. The metal flashing should be lapped above the roof covering material extending vertically up along the exterior side of the chimney chase before being "let in" behind the chase siding at the lap joint with combustible siding kept 4–6 inches above the roof surface (see Figure 6). Corrosion-resistant metal flashing is one material that might be used to accomplish this. Alternatively, "local" replacement of siding (i.e., chase area only) with non-combustible materials would also be acceptable.

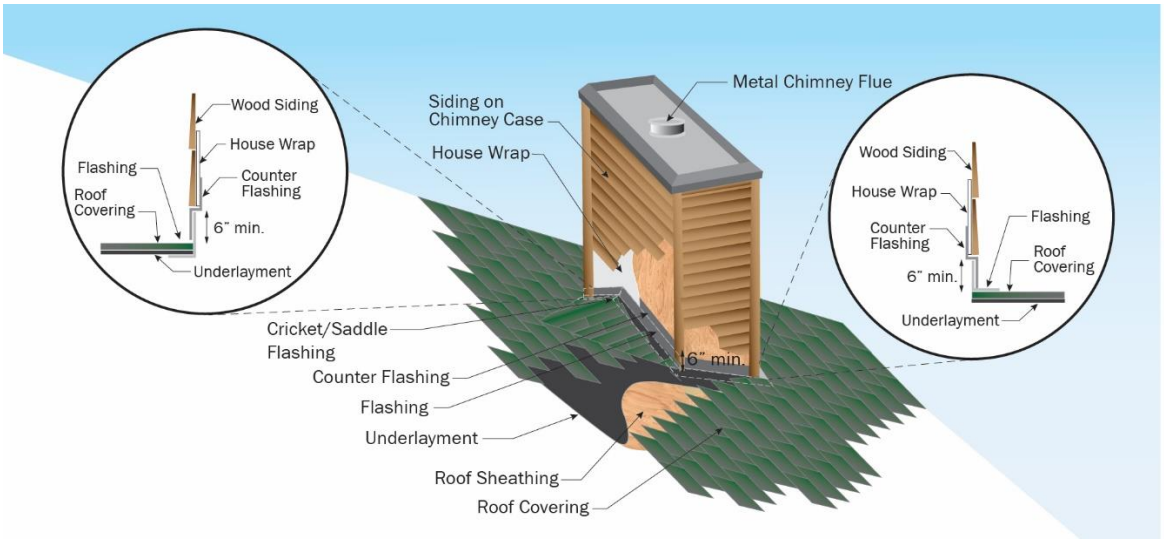

Figure 6. Example of fire-resistant caulking and non-combustible underlayment at the chimney-to-roof joint.

Where metal valley flashing is used for chimney chases, incorporate an underlying mineral surfaced cap sheet. Be sure to consult with the roofing manufacturer to confirm that the installation of the cap sheet does not void the roofing manufacturer's warranty.

For other types of roof penetrations (e.g., vents, skylights), ensure the joint at the penetration and the roof assembly is well sealed to minimize the entry of embers (see Figure 7 for example of skylight-to-roof interface). Roof penetrations should be sealed per manufacturer's instructions, where available. Where no instructions are available, this can be achieved with fire-resistant caulk, noncombustible mortar, compressed mineral wool, fire-rated expanding foam, or metal flashing. For enhanced protection, use a rated exterior penetration firestop system. Special considerations should be taken when considering the installation of a rated exterior penetration firestop system, such as ensuring the system installed is listed for use in the appropriate type of roof system.

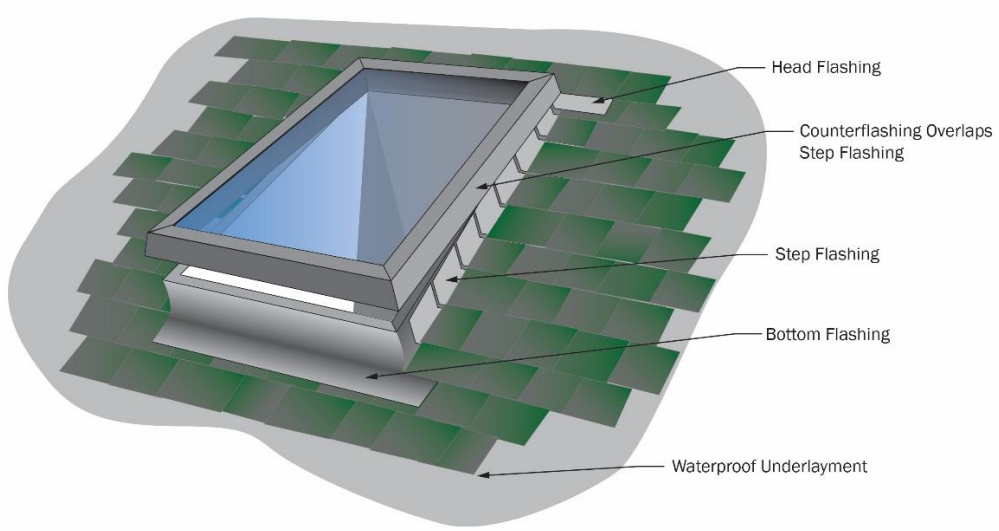

Figure 7. Example of flashing details for skylight-to-roof joint.

For retrofits, replace existing vulnerable roof penetrations and surrounding shingles. When replacing penetrations, follow manufacturer's recommendations for sealing the gaps that might be created by the installation (see Figure 8).

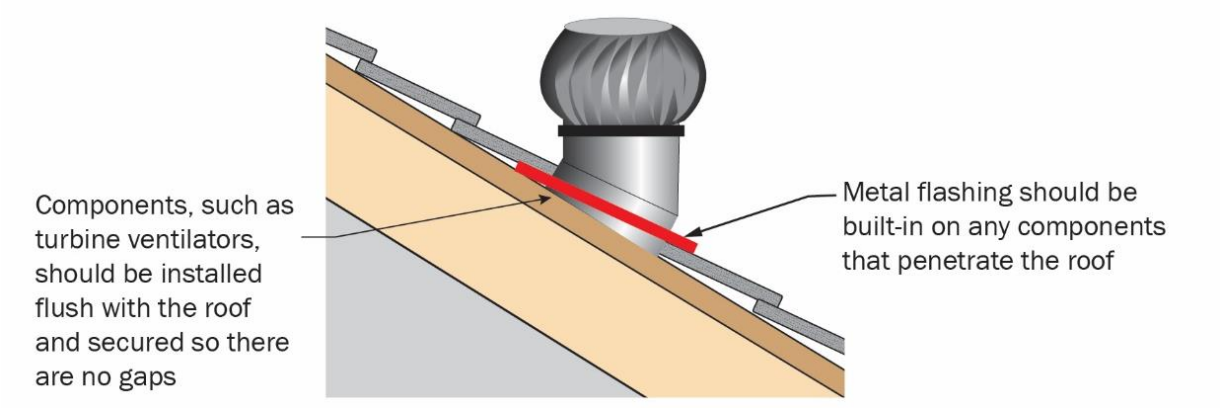

Figure 8. Example of a through penetration detail at the roof.

4.1.2. ROOF CONSTRUCTION DETAILING – UNDERLAYMENT AND DECKING DETAILING

As embers can be blown under steep-slope roof coverings, an enhanced underlayment such as a mineral-surface cap sheet rated for use in a Class A rated assembly should be installed. For metal shingles or panels, the metal should not bear directly on the cap sheet due to corrosion concerns (SFPE WUI Handbook, 2023).

Similarly, where roofing material is installed over furring strips to create an airspace under the roof covering above a combustible deck, consider installing a cap sheet complying with ASTM D3909 under the entire roof deck. See NFPA 1140, 2022 Edition, Section 25.3.5 for more information, plus local code criteria for roof system requirements.

Most homes have roof decks comprised of wood (e.g., plywood or oriented strand board). For more protection, a layer of fiberglass gypsum panelized product between the decking and the roof covering should be installed. Where fiberglass gypsum board is installed, ensure that the joints between the gypsum and wood sheathing panels are staggered (UCANR, 2023), as shown in Figure 9. This strategy is particularly useful where roof coverings have a gap between the covering and the roof deck (i.e., barrel-style and some metal coverings).

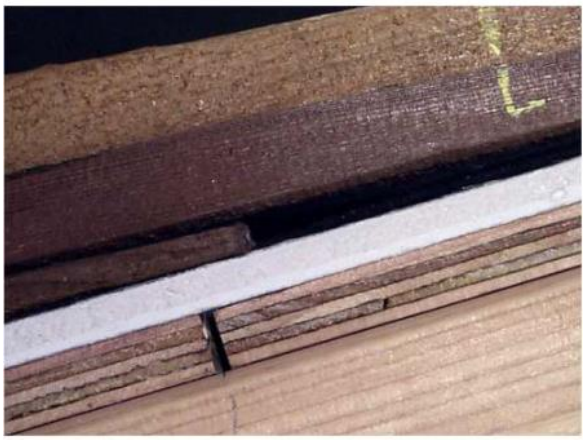

Figure 9. Vertical cross-section through Class A rated roof assembly consisting of exterior-rated, fire-retardant treated wood shakes and underlying fiberglass gypsum board (in white). The joints between the wood sheathing (below) and gypsum are staggered. (Credit: Stephen Quarles)

As most low-slope roofs will have a layer of insulation, the insulation can be comprised of a range of materials anywhere from highly combustible to noncombustible. Noncombustible insulation provides the most fire-resistant properties. However, polyisocyanurate roof insulation could be used provided a 5/8-inch layer of gypsum roof board per ASTM C1177 is installed immediately below the roof covering. The strategy listed in the above paragraph is also applicable (FEMA Home Builder's Guide to Construction in Wildfire Zones, 2008).

4.1.3. ROOF-TO-ROOF INTERFACES – RIDGES

Roof ridges can oftentimes have roof caps that create additional surfaces and gaps leading to ember accumulation and/or entrapment of vegetative debris, which can ignite during a wildfire. In addition, roof ridge edges can also be susceptible to having large gaps that are vulnerable to the collection of vegetative debris and ember intrusion. As these areas are difficult for homeowners to keep clear of debris or inspect annually, various wildfire detailing are recommended to reduce wildfire vulnerabilities. For roof caps that also serve as attic ventilation (e.g., underlying ridge vents), ensure that these ridge vents are provided with ember and flame-resistant vent protection. Where roof caps do not serve as attic ventilation, ensure that any gaps are sealed. For roof ridge edges or terminations, ensure any gaps are filled with a noncombustible material (see Figure 10). Typically, a mortar mix is easier to use in these locations.

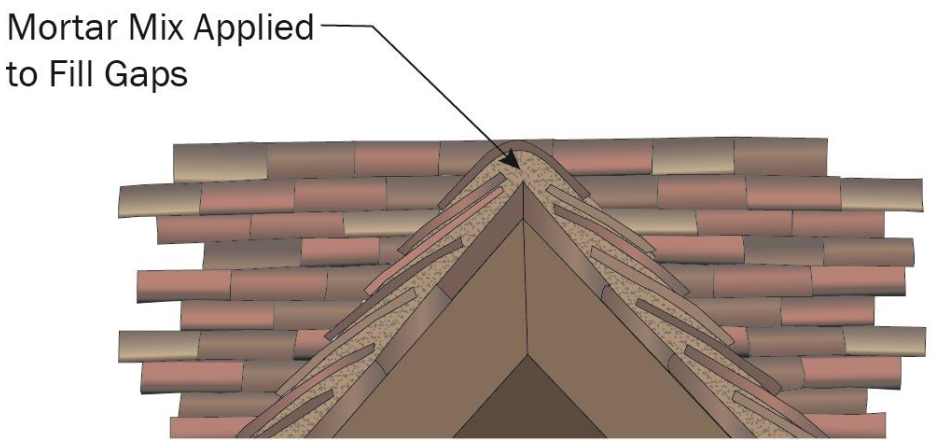

Figure 10. Example of mortar mix used to seal gaps at roof ridge edges.

4.1.4. ROOF-TO-ROOF INTERFACES – VALLEYS

Provide roof valley joints with metal valley flashing with an underlying mineral surfaced cap sheet incorporated into the assembly. See manufacturer's guidelines for properly installing the underlayment (see Figure 11 for an example).

Where Class A asphalt composition shingles are used, use of metal flashing can be avoided by interweaving the shingles. One method that can be used to accomplish this is to install a cut valley.

Limit the number of complex roof designs and elevation changes.

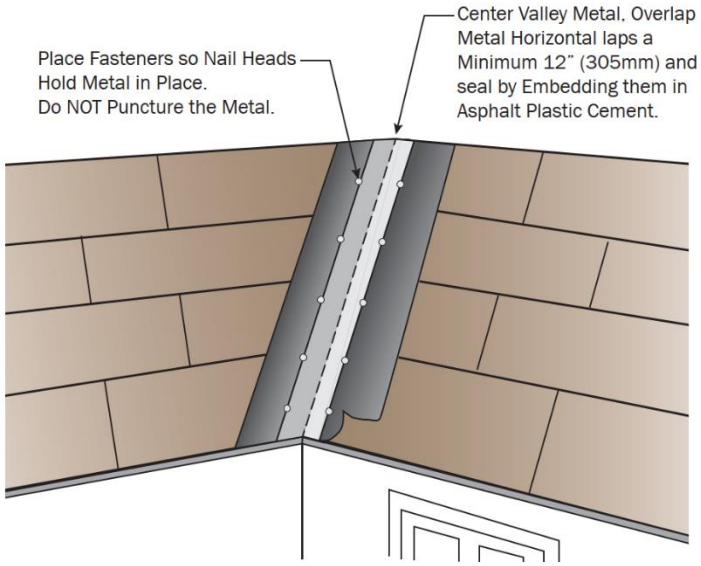

Figure 11. Example showing roof valley flashing installation.

4.1.5. EDGE-OF-ROOF JOINTS

Plug gaps at the roof edge. The methods used to do this are similar to strategies used for roof ridges (see above). For roof coverings that create gaps at open ends of tiles, provide bird-stop or mortar to plug the gap. For other types of roof edges, provide metal flashing at the roof edge. A cap sheet should be installed under the metal flashing.

Install a metal drip edge or flashing to protect the roof edge (particularly at all rake and eave edges) to minimize ember entry to the attic via materials burning in a rain gutter or wind-blown embers impinging on the area at the edge of the roof (see Figure 12).

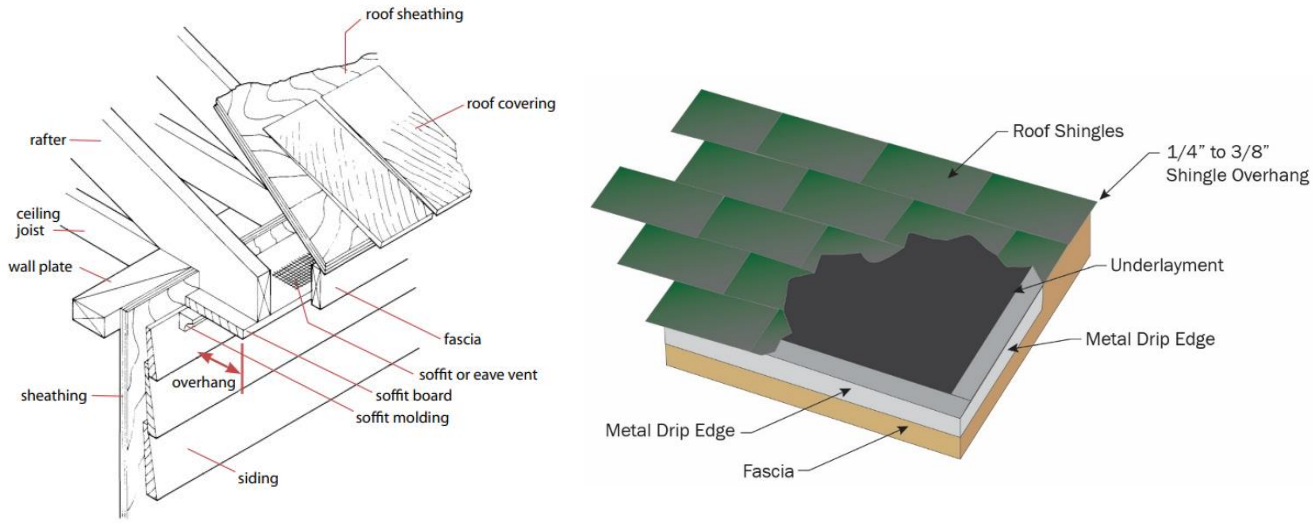

Figure 12. Schematic of the edge of roof detail (left) (adapted from Sherwood and Stroh, 1989) Use of metal drip edge to limit embers from entering gaps at the roof edge, particularly at the fascia where gutters are attached (right) (adapted from SFPE WUI Handbook, 2023).

4.1.6. HEAD-OF-WALL JOINTS

Provide fire-resistant caulking at any gaps at the joint between the head-of-wall and roof or ceiling. Use noncombustible construction where possible (in both new construction & retrofits). Protect exterior walls with 2-inch nominal solid blocking between exposed rafters at all roof overhangs, under exterior wall coverings on sides exposed to native vegetation (see Figure 13). For more information, see NFPA 1140, 2022 Edition, Section 25.6.2.

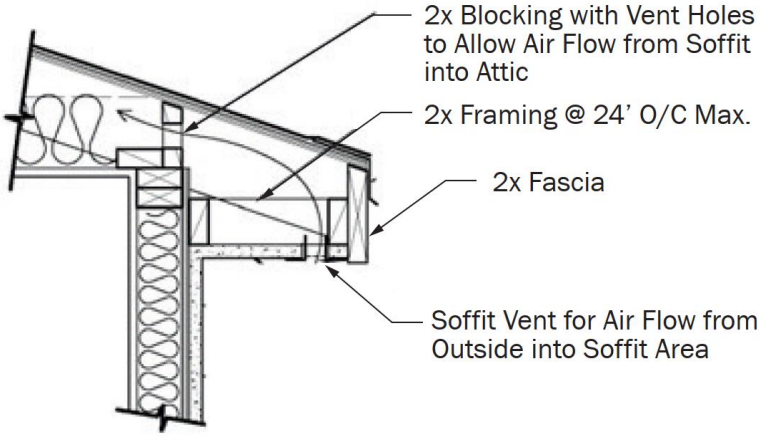

Figure 13. Diagram of construction details that allow air to flow from the soffit into the attic (adapted from UCANR, 2010).

4.1.7. BOTTOM-OF-WALL-TO-ROOF-JOINTS

Provide fire-resistant caulking at any gaps at the joint between the bottom-of-wall-to roof joint. Where the wall siding is comprised of combustible materials install noncombustible metal flashing and counter flashing that protects the roof-to-wall joint for at least 6 vertical inches above the roof surface. The metal flashing should be lapped above the roof covering material extending vertically up along the exterior side of the wall siding before being "let in" behind the siding at the lap joint, with combustible siding kept 4–6 inches above the roof surface (see Figure 14). Corrosion-resistant metal flashing is one material that might be used to accomplish this. Alternatively, "local" replacement of siding with non-combustible materials would also be acceptable.

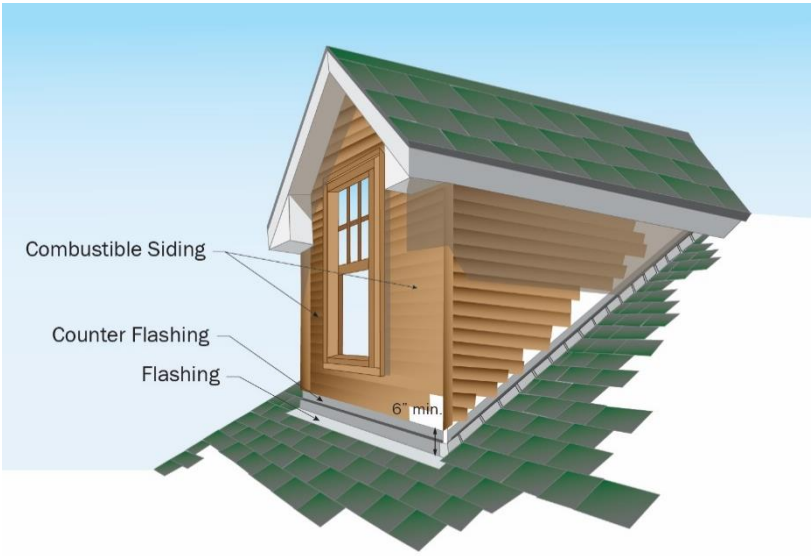

Figure 14. Example of metal flashing installation at bottom-of-wall-to-roof joint.

4.2. Wall Joints, Penetrations, and Detailing Considerations

The guidance below targets new construction and retrofits to existing buildings, describing various actions for wall joints, penetrations, and detailing that are commonly found in residential construction. See Figure 15 for an overview of building joint locations.

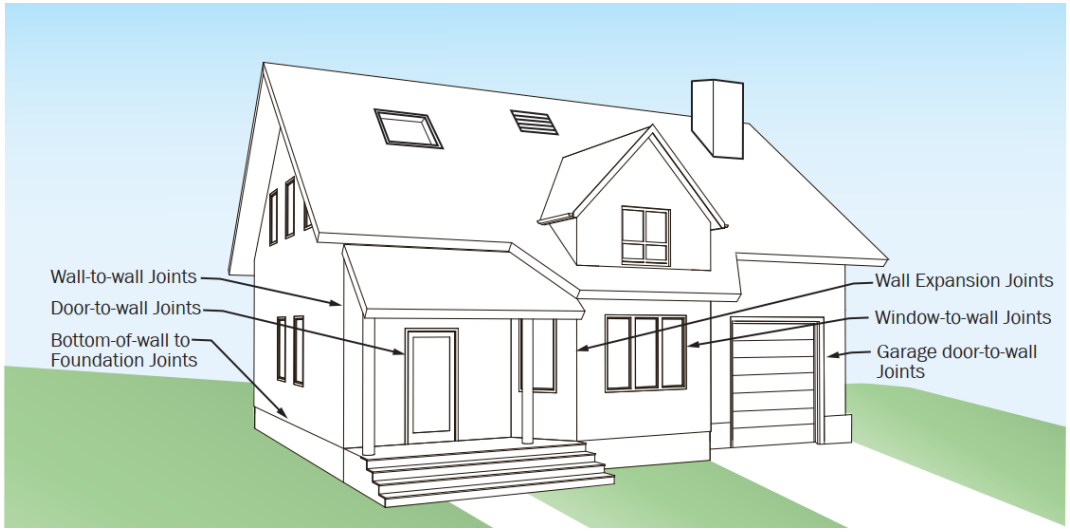

Figure 15. Various locations of vulnerable joints, penetrations, and interfaces throughout the interior of a residential structure to wildfires.

4.2.1. WALL-TO-WALL JOINTS

Seal gaps in wall joints with fire-resistant firestopping products. For wood stud construction with composite panel siding (e.g., fiber cement siding), consider incorporating metal flashing with an underlying mineral surfaced cap sheet into the assembly. (Refer to Figure 7 and Figure 14 for metal flashing installation examples). For concrete-to-concrete wall construction, consider installing recessed polyethylene backer rods compressed into the joint with fire sealant flush to exterior wall surfaces (see Figure 16).

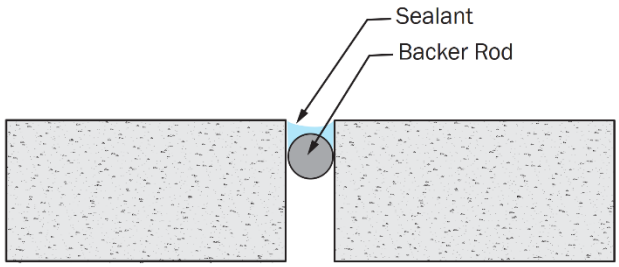

Figure 16. Plan view cross-section of exterior wall joints, where a backer rod is placed to fill joint (adapted from Armacell, 2017).

4.2.2. WINDOW-TO-WALL JOINTS

Ensure the space between the window and the framing is well sealed. Where possible, incorporate the use of rigid cap flashing at the bottom-of-wall-top-of-window joint between the underlayment and

wall siding (see Figure 17). Replace vinyl window frames with frames comprised of noncombustible materials (e.g., metal clad wood, aluminum).

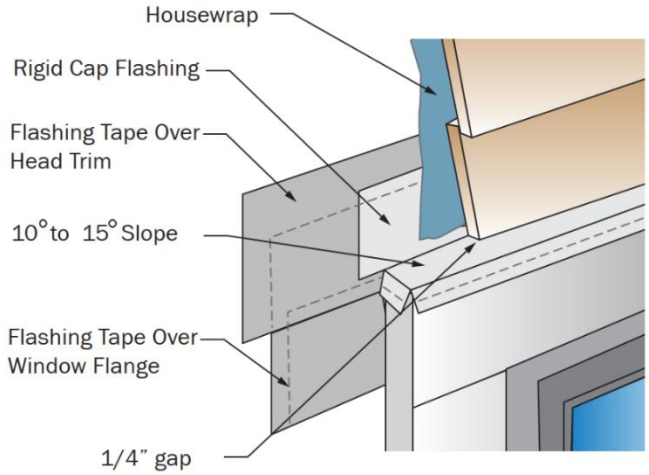

Figure 17. Example of rigid cap flashing installation at window-to-wall joints (adapted from Fine Homebuilding).

4.2.3. DOOR-TO-WALL JOINTS

Ensure the space between the door and the framing is well sealed. Where possible, incorporate the use of rigid cap flashing at the wall-to-door interface, between the underlayment and wall siding (see Figure 18).

Figure 18. Examples of door-to-wall joints. Where openings in the plane of a door exist, such as dog doors or windows, the gaps around the openings should be filled caulking, mineral wool, or similar non-combustible material. In addition, the opening itself should be protected from ember intrusion that can be deployed during a wildfire incident (e.g., provide a noncombustible shutter).

4.2.4. GARAGE-DOOR-TO-WALL JOINTS

Where gaps are present, utilize appropriate weatherstripping, firestopping and/or penetration materials/products as needed. Figure 18 above demonstrates some gaps that may be appropriately filled with firestopping materials.

Make sure the space between the garage door, framing, and concrete slab is well sealed to minimize the entry of embers. Ensure weather sealing is provided and in good condition. Where possible, incorporate the use of rigid cap flashing around the joint of the wall-to-garage door frame interface, between the underlayment and wall siding (see Figure 19).

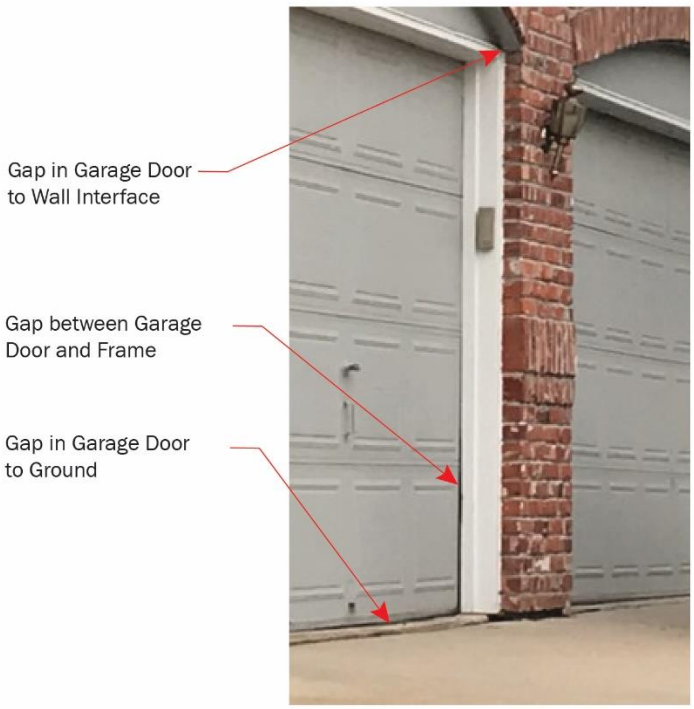

Figure 19. Example of gaps at garage-door-to-wall joint.

4.2.5. WALL EXPANSION JOINTS.

Where possible, use or replace existing expansion joints with noncombustible materials.

4.2.6. BOTTOM-OF-WALL-TO-FOUNDATION JOINTS

Block gaps in siding with firestopping materials (e.g., mineral wool, fire caulking, and fire-rated sealants). Where possible, install a minimum of 6-inch noncombustible vertical separation where horizontal surfaces meet the wall. Please note that this 6-inch minimum assumes very minimal combustibles in the near-home zone (0–5 feet), which should be kept free of combustibles. This could be a separation created by noncombustible materials, or metal flashing, as demonstrated in Figure 20.

Figure 20. Examples of noncombustible separation at bottom-of-wall-to-foundation joints (Left: noncombustible separation, right: metal flashing).

4.3. Floor-to-Wall Joints and Detailing Considerations

Balconies, decks, and porches interface with the exterior wall envelope. At these interfaces, embers can accumulate, leaving them susceptible to ignition. Some measures can be taken to protect these joints:

- Install metal flashing on ledger boards that are attached without gaps (see Figure 21).
- Seal gaps with appropriate firestopping and fire caulking.

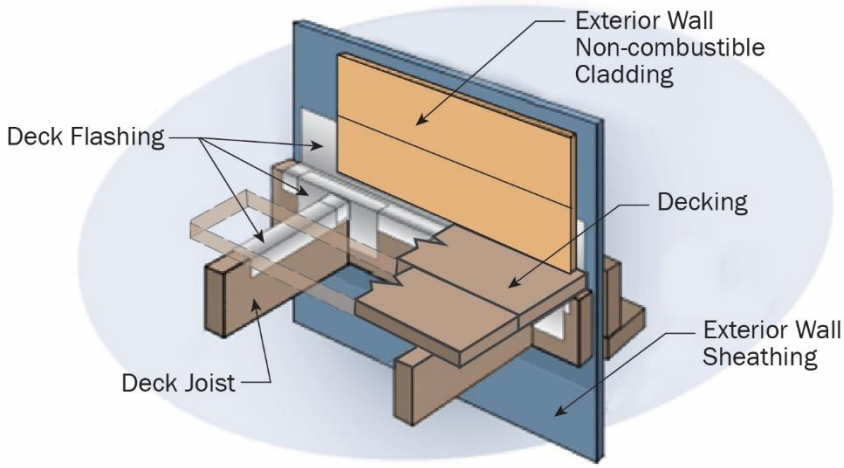

Figure 21. Example installation of metal flashing on ledger boards.

5. Fire-Listed Products and Assemblies

While most exterior building envelope components and associated joints, interfaces and penetrations do not have nationally established WUI fire test standards or product lists, the California Office of the State Fire Marshal (CA SFM) currently provides a list of WUI products that satisfy CA SFM WUI codes and test standards. Many SFM Test Standards have been converted to

ASTM (national) standards, however, are not broadly referenced by most building and fire codes outside of California. While these products meet state-specific requirements, they may be a good starting point for jurisdictions where WUI fire test standards are not adopted[2].

The contractor is also advised to consult other recognized (approved) fire-testing laboratories (e.g., UL Solutions, Intertek, Southwest Research Institute, FM Global) or nationally recognized wildfire/fire research entities (e.g., IBHS, NIST, ATF) as WUI fire test standards, custom product testing, and the latest research in building fire safety are constantly evolving. Each of the fire testing agencies keep databases of products that have been listed by their agency and can be accessed online via their respective websites. In addition, each of the national fire research organizations have dedicated websites for the latest wildfire building research and testing. Refer to the 'Resources and Useful Links' section for details.

6. Fire Testing for Wildfire Conditions

Where "listed" wildfire joint systems, products, or assemblies are not available or do not satisfy the performance goals of the project, custom fire testing may be a reliable option (albeit expensive). Prior to conducting any custom fire tests, the contractor or builder should consult with a wildfire behavior specialist, fire engineer, or other fire safety design professional (e.g., architect) to evaluate site-specific wildfire hazards and risks, and project specific building construction detailing to understand the specific fire safety needs and performance objectives. A custom fire test specification will likely need to be developed in collaboration with the local fire department and accredited fire testing laboratory to identify a "standard" wildfire exposure, need for pre-fire weathering tests, acceptance criteria, and reporting requirements. Development of a "wildfire tested" joint system or product should also include installation, inspection, and long-term maintenance protocols.

7. Resources and Useful Links

Full-Scale Research on Wildfire Resiliency of Joints and Building Detailing

- Insurance Institute for Business & Home Safety (IBHS) Full-Scale Fire Testing https://ibhs.org/risk-research/wildfire/
- Fire Safety Research Institute (FSRI) https://fsri.org/about
- National Institute of Standards and Testing (NIST) https://www.nist.gov/fire

Codes and Standards for Fire Resistant Joint Systems for Interior Building Fires

- International Code Council (ICC) Codes, International Building Code https://www.iccsafe.org/

[2] https://osfm.fire.ca.gov/divisions/fire-engineering-and-investigations/building-materials-listing/bml-search-building-materials-listing/

- National Fire Protection Association® (NFPA) Codes and Standards, NFPA 5000 https://www.nfpa.org/

Codes and Standards for General Protection of Structures in the Wildland Urban Interface

- International Code Council (ICC) Codes, International Wildland Urban Interface Code https://www.iccsafe.org/
- National Fire Protection Association® (NFPA) Codes and Standards, NFPA 1140 https://www.nfpa.org/

Design Guidance for New and Existing Construction

- SFPE Foundation Virtual Handbook on WUI Risk Assessments https://www.sfpe.org/wuihandbook/home
- University of Nevada, Reno Wildfire Home Retrofit Guide https://extension.unr.edu/publication.aspx?PubID=3810
- Maranghides, A., et al, WUI Structure/Parcel/Community Fire Hazard Mitigation Methodology https://www.nist.gov/el/fire-research-division-73300/wildland-urban-interface-fire-73305/hazard-mitigation-methodology-1

Databases for Fire-Listed Products and Assemblies

- FM Approvals, Approval Guide https://www.approvalguide.com/
- Intertek Directory of Building Products https://bpdirectory.intertek.com/pages/DLP_Search.aspx
- UL Product iQ https://productiq.ulprospector.com/en
- CAL FIRE Building Materials Listings https://osfm.fire.ca.gov/divisions/fire-engineering-and-investigations/building-materials-listing/bml-search-building-materials-listing/

8. References

Armacell. “The Different Types of Backer Rod and Applications”. November 2017. https://www.armacell.us/blog/post/the-different-types-of-backer-rod-and-applications/

ASTM E176-14, Standard Terminology of Fire Standards.

Code Red Consultants. “Firestopping FAQ”. September 2017. https://coderedconsultants.com/insights/firestopping-faq/

Fine Homebuilding. “Window and Door Flashing Guide”. N.d. https://www.finehomebuilding.com/list/window-and-door-flashing-guide

GAF. “Pro Field Guide Version 2.0” 2021. https://www.gaf.com/en-us/roofing-products/residential-roofing-products/roof-deck-protection/fire-resistant/versashield/documents

Knott, E. “Common firestop code violations”. February 2019. https://www.iccsafe.org/building-safety-journal/bsj-technical/common-firestop-code-violations-2/

Northern Roof Tiles. “Flexim Roof Mortar Pictures”. N.d. https://www.fleximmortar.com/pictures

Olsen, D. “Material Applications: Corrosion Resistant Alloys”. November 2020. https://www.metaltek.com/blog/material-applications-corrosion-resistance/

Quarles, S. et. al. “Home Survival in Wildfire-Prone Areas: Building Materials and Design Considerations”. May 2010. https://anrcatalog.ucanr.edu/pdf/8393.pdf

University of California Agriculture and Natural Resources (UCANR). Mariposa County. “Roof”. 2023. https://ucanr.edu/sites/mariposa/Fire_Information/Wildfire_Preparation/Preparing_Your_Home_599/Roof/