US. Department of Homeland Security
500 C Street, SW
Washington, DC 20472

FEMA

December 1, 2008
(Originally issued on June 20, 2007)

MEMORANDUM FOR: Mitigation Division Directors
Regions I – X

FROM: Douglas A. Bellomo, P.E., Director
Risk Analysis Division

SUBJECT: Revised Procedure Memorandum 42 – Quality Control Requirements in the Digital Flood Insurance Rate Map Production Process

EFFECTIVE DATE: **January 1, 2009** – Post-Preliminary studies that are submitted for Quality Review 5.

BACKGROUND

On June 20, 2007, Federal Emergency Management Agency (FEMA) issued Procedure Memorandum (PM) 42 to re-align quality reviews of Digital Flood Insurance Rate Maps (DFIRMs) to deliver quality flood hazard maps to communities in a timely manner for adoption. The June 20, 2007, version of PM 42 is available on FEMA's website at http://www.fema.gov/library/viewRecord.do?id=2723.

ISSUE

Since the issuance of PM42, difficulty in meeting the timeline requirements outlined in PM42 for Quality Review 7 have delayed the delivery of final FIRMs to communities for adoption. Therefore, further alignment of quality review steps is needed to achieve FEMA's goal of delivering quality final maps to communities soon after the issuance of Letter of Final Determination (LFD).

ACTION TAKEN

All mapping partners, including Indefinite Delivery/Indefinite Quantity contractors and Cooperating Technical Partners, must submit deliverables outlined under Quality Reviews 6 and 7 at Quality Review 5 when they submit the final DFIRM database and georeferenced map panels to FEMA. Therefore, deliverables required for Quality Reviews 5, 6 and 7 must be submitted at the same time and pass before the issuance of the LFD as shown in the revised DFIRM production process in Figure 1 and described in the attachment (which only includes the revised quality control reviews since the original issuance of PM42). The requirements for other quality review steps remain the same. In the event that there are compelling reasons for

All policy and standards in this document have been superseded by the FEMA Policy for Flood Risk Analysis and Mapping.
However, the document contains useful guidance to support implementation of the new standards.

exceptions to any quality control step outlined in Figure 1, FEMA Headquarters must be contacted by the FEMA Region for concurrence.

There are many benefits to these changes. Most significantly, mapping partners will be able to make corrections on Quality Reviews 5 and 7 at the same time; negatives will not be required for review until the panels pass both Quality Reviews 5 and 7 (which may be discontinued in the future as part of FEMA's policy to transition to distributing only digital products); and, final map products will be provided to the communities in a more reliable timeframe.

cc: Distribution list

Distribution List (electronic distribution only)

Office of the Mitigation Directorate, Acting Assistant Administrator

Risk Reduction Division, Mitigation Directorate

Risk Analysis Division, Mitigation Directorate

Risk Insurance Division, Mitigation Directorate

Federal Insurance and Mitigation Divisions in FEMA Regional Offices

Office of Legislative Affairs

Office of Chief Counsel

National Service Provider

Systems Engineering and Technical Assistance Contractor

Map Service Center

Cooperating Technical Partners

FEMA Contractors

All policy and standards in this document have been superseded by the FEMA Policy for Flood Risk Analysis and Mapping.
However, the document contains useful guidance to support implementation of the new standards.

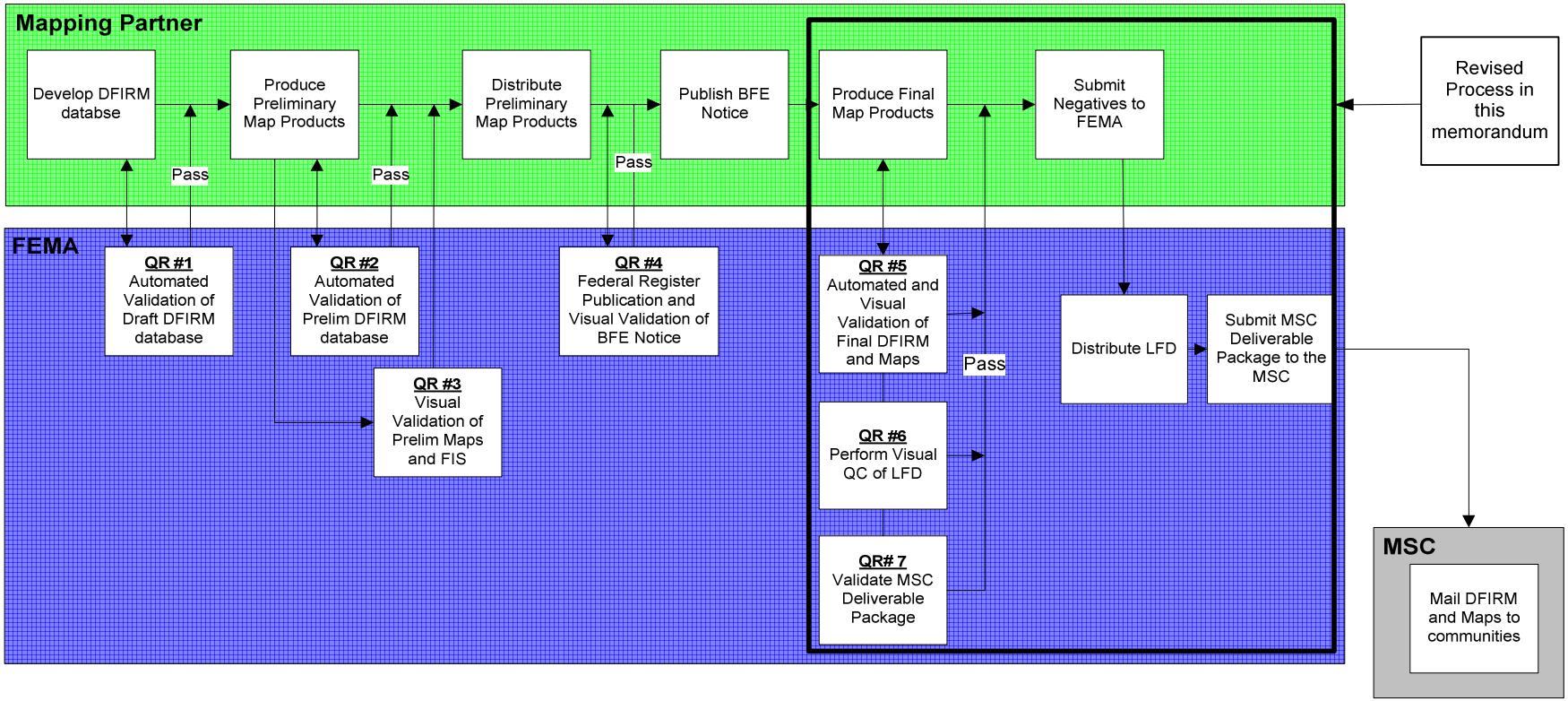

Figure 1: Quality Control Steps within the revised DFIRM Production Process

All policy and standards in this document have been superseded by the FEMA Policy for Flood Risk Analysis and Mapping.
However, the document contains useful guidance to support implementation of the new standards.

ATTACHMENT

Description of Revised Quality Control Review Steps in the Revised DFIRM Production Process

QUALITY REVIEW 5: Automated and Visual Review of DFIRM Database and Georeferenced RFIRMs

Quality Review 5 remains unchanged. However, a study should not be resubmitted for Quality Review 5 until all comments from both Quality Reviews 5 and 7 are received and incorporated on all affected panels. Changes made to a database after it is (re)submitted for Quality Review 5 will result in the required resubmission of the database and images.

QUALITY REVIEW 6: Check LFD Before Distribution

The mapping partner that is assigned the "Prepare LFD Docket" task is responsible for preparing and submitting the LFD Summary Sheet concurrent with Quality Review 5, or 60-days prior to the projected LFD date. The LFD Summary Sheet must be submitted to FEMA via e-mail for review. FEMA will review the LFD Summary Sheet and return it to the mapping partner within 14 days. 30 days before the projected LFD date the mapping partner must submit the LFDs, LFD Docket and Final SOMAs to FEMA through the MIP. FEMA will review the submittal and respond to the mapping partner within 14 days. The mapping partner must address comments and make resubmit corrections within 7 days. Any errors that are identified by FEMA must be resolved by the mapping partner prior to issuance of the LFD and final SOMA. Once the LFDs, final SOMAs and final docket have been approved (no less than 7 days before the LFD date), the final dockets of all studies for the LFD date will be consolidated and sent to FEMA HQ for concurrence.

The final SOMA must be completed in the MIP using the SOMA application. If all Letters of Map Change are not updated, the user will not be able to advance to the next step in the MIP Study Workflow.

QUALITY REVIEW 7: Validate MSC Deliverable Package

This review includes the "Approve or Reject" step in the MIP Study Workflow's "Manage Post-Preliminary Processing/Perform Map Product QA."

Produce Map Products

The Mapping partner that is assigned the "Submit MSC Deliverable" task prepares and submits the complete MSC deliverable package paperwork in digital format, digital FIRM images, and hard copy FIS text (excluding the DFIRM Database, negatives and final RFIRMs) to FEMA 60-days prior to the projected LFD date (concurrent with Quality Review 5 submittal and the LFD Summary Sheet for Quality Review 6). Digital deliverables must be submitted via e-mail or using File Transfer Protocol (FTP). Volume 1, Pages 1-101 of the Guidelines and Specifications outlines a full list of map products required for delivery to the MSC.

All policy and standards in this document have been superseded by the FEMA Policy for Flood Risk Analysis and Mapping.
However, the document contains useful guidance to support implementation of the new standards.

Submit Map Products to MSC

60-days prior to the projected LFD date (concurrent with Quality Review 5), FEMA will review the MSC package and notify the mapping partner of any issues found within 3-4 weeks. The mapping partner must resolve these issues and resubmit for review prior to LFD. The corrected materials should not be resubmitted for Quality Review 7 until comments from both Quality Reviews 5 and 7 have been addressed and incorporated.

Immediately following the receipt of passing reports for both Quality Reviews 5 and 7:

- The Mapping partner must submit the digital FIS Text, CMAL, CEO Letters, and Print Processing sheets, via the MIP at the "Submit MSC Deliverables" workflow task;
- The Mapping partner must order and submit FIRM negatives and plots to FEMA no less than 7 days after passing both Quality Reviews 5 and 7. As stated earlier, this requirement may be discontinued in the future as part of FEMA's policy to transition to distributing only digital products;
- FEMA will obtain the passing database and georeferenced RFIRMs from the MIP; and
- FEMA will create the DVD from the database, RFIRMs, and the other items uploaded to the MIP at the "Submit MSC Deliverables" task and forward the complete MSC Package to the MSC no more than 6 business days after receipt of the MSC Deliverables on the MIP, the plots, and negatives.

The study must pass Quality Review 7 before the LFD may be distributed.

All policy and standards in this document have been superseded by the FEMA Policy for Flood Risk Analysis and Mapping.
However, the document contains useful guidance to support implementation of the new standards.