EDR Historical Topographic Map Report

Environmental Data Resources, Inc.s (EDR) Historical Topographic Map Report is designed to assist professionals in evaluating potential liability on a target property resulting from past activities. EDRs Historical Topographic Map Report includes a search of a collection of public and private color historical topographic maps, dating back to the early 1900s.

Thank you for your business.
Please contact EDR at 1-800-352-0050
with any questions or comments.

Disclaimer - Copyright and Trademark Notice

This Report contains certain information obtained from a variety of public and other sources reasonably available to Environmental Data Resources, Inc. It cannot be concluded from this Report that coverage information for the target and surrounding properties does not exist from other sources. **NO WARRANTY EXPRESSED OR IMPLIED, IS MADE WHATSOEVER IN CONNECTION WITH THIS REPORT. ENVIRONMENTAL DATA RESOURCES, INC. SPECIFICALLY DISCLAIMS THE MAKING OF ANY SUCH WARRANTIES, INCLUDING WITHOUT LIMITATION, MERCHANTABILITY OR FITNESS FOR A PARTICULAR USE OR PURPOSE. ALL RISK IS ASSUMED BY THE USER. IN NO EVENT SHALL ENVIRONMENTAL DATA RESOURCES, INC. BE LIABLE TO ANYONE, WHETHER ARISING OUT OF ERRORS OR OMISSIONS, NEGLIGENCE, ACCIDENT OR ANY OTHER CAUSE, FOR ANY LOSS OF DAMAGE, INCLUDING, WITHOUT LIMITATION, SPECIAL, INCIDENTAL, CONSEQUENTIAL, OR EXEMPLARY DAMAGES. ANY LIABILITY ON THE PART OF ENVIRONMENTAL DATA RESOURCES, INC. IS STRICTLY LIMITED TO A REFUND OF THE AMOUNT PAID FOR THIS REPORT.** Purchaser accepts this Report AS IS. Any analyses, estimates, ratings, environmental risk levels or risk codes provided in this Report are provided for illustrative purposes only, and are not intended to provide, nor should they be interpreted as providing any facts regarding, or prediction or forecast of, any environmental risk for any property. Only a Phase I Environmental Site Assessment performed by an environmental professional can provide information regarding the environmental risk for any property. Additionally, the information provided in this Report is not to be construed as legal advice.

Copyright 2012 by Environmental Data Resources, Inc. All rights reserved. Reproduction in any media or format, in whole or in part, of any report or map of Environmental Data Resources, Inc., or its affiliates, is prohibited without prior written permission.

EDR and its logos (including Sanborn and Sanborn Map) are trademarks of Environmental Data Resources, Inc. or its affiliates. All other trademarks used herein are the property of their respective owners.

Historical Topographic Map

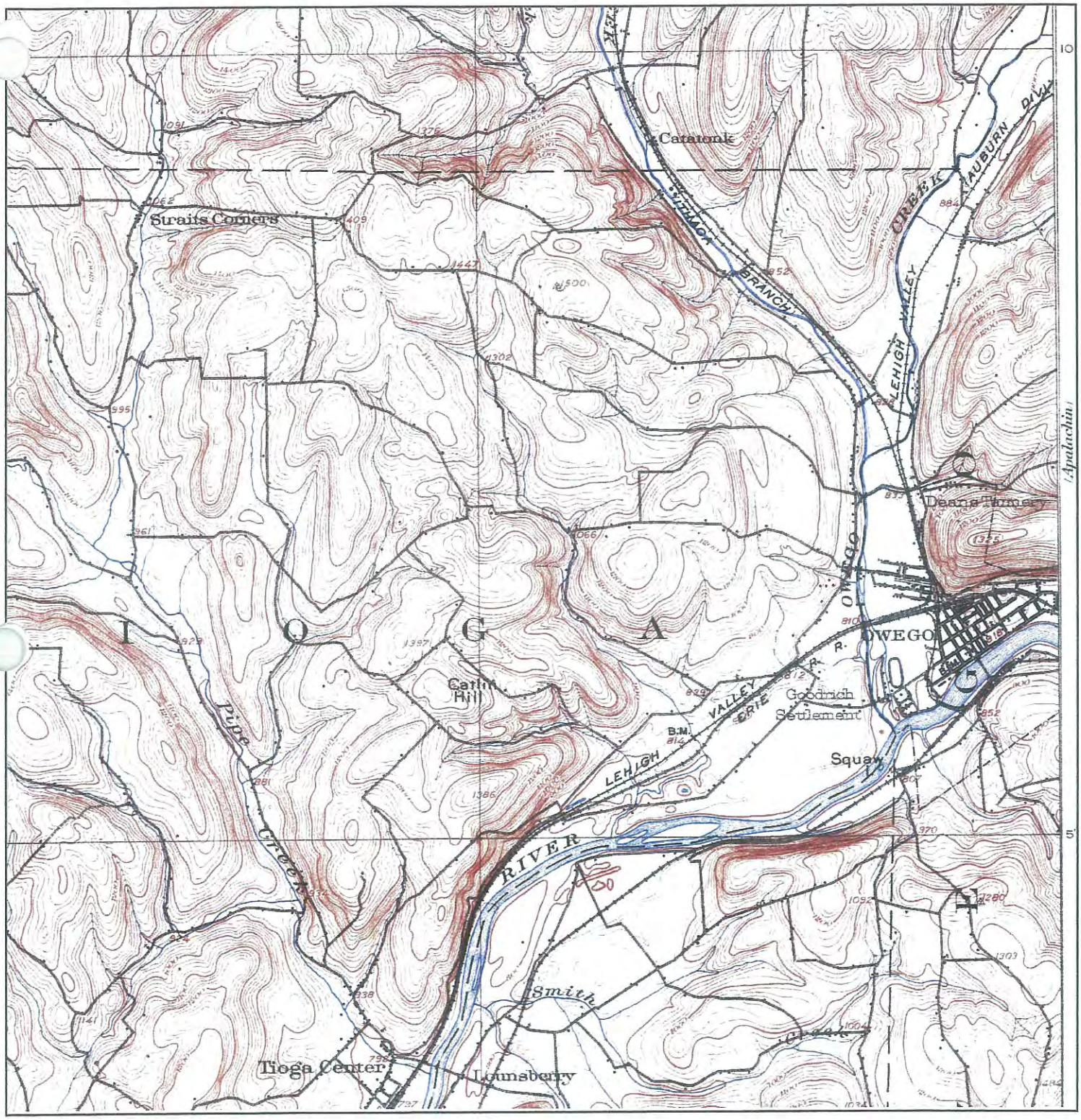

N	TARGET QUAD NAME: OWEGO MAP YEAR: 1903 SERIES: 15 SCALE: 1:62500	SITE NAME: Owego School ADDRESS: 1 Christa Mcauliffe Drive Owego, NY 13827 LAT/LONG: 42.1129 / -76.2738	CLIENT: Ecological Analysis LLC CONTACT: James Bates INQUIRY#: 3461918.4 RESEARCH DATE: 11/26/2012

Historical Topographic Map

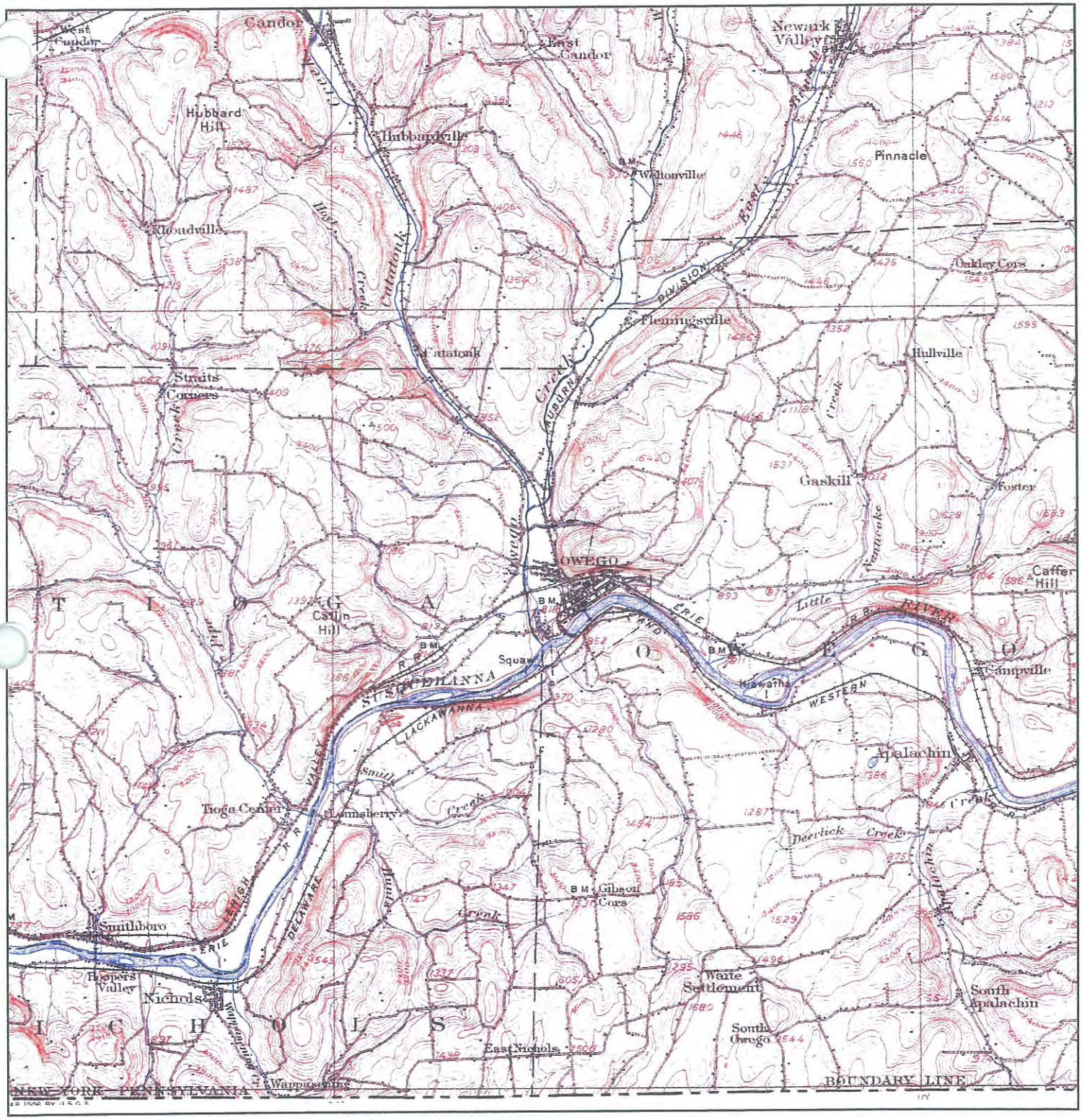

N	TARGET QUAD NAME: CATATONK MAP YEAR: 1906 SERIES: 30 SCALE: 1:125000	SITE NAME: Owego School ADDRESS: 1 Christa Mcauliffe Drive Owego, NY 13827 LAT/LONG: 42.1129 / -76.2738	CLIENT: Ecological Analysis LLC CONTACT: James Bates INQUIRY#: 3461918.4 RESEARCH DATE: 11/26/2012

Historical Topographic Map

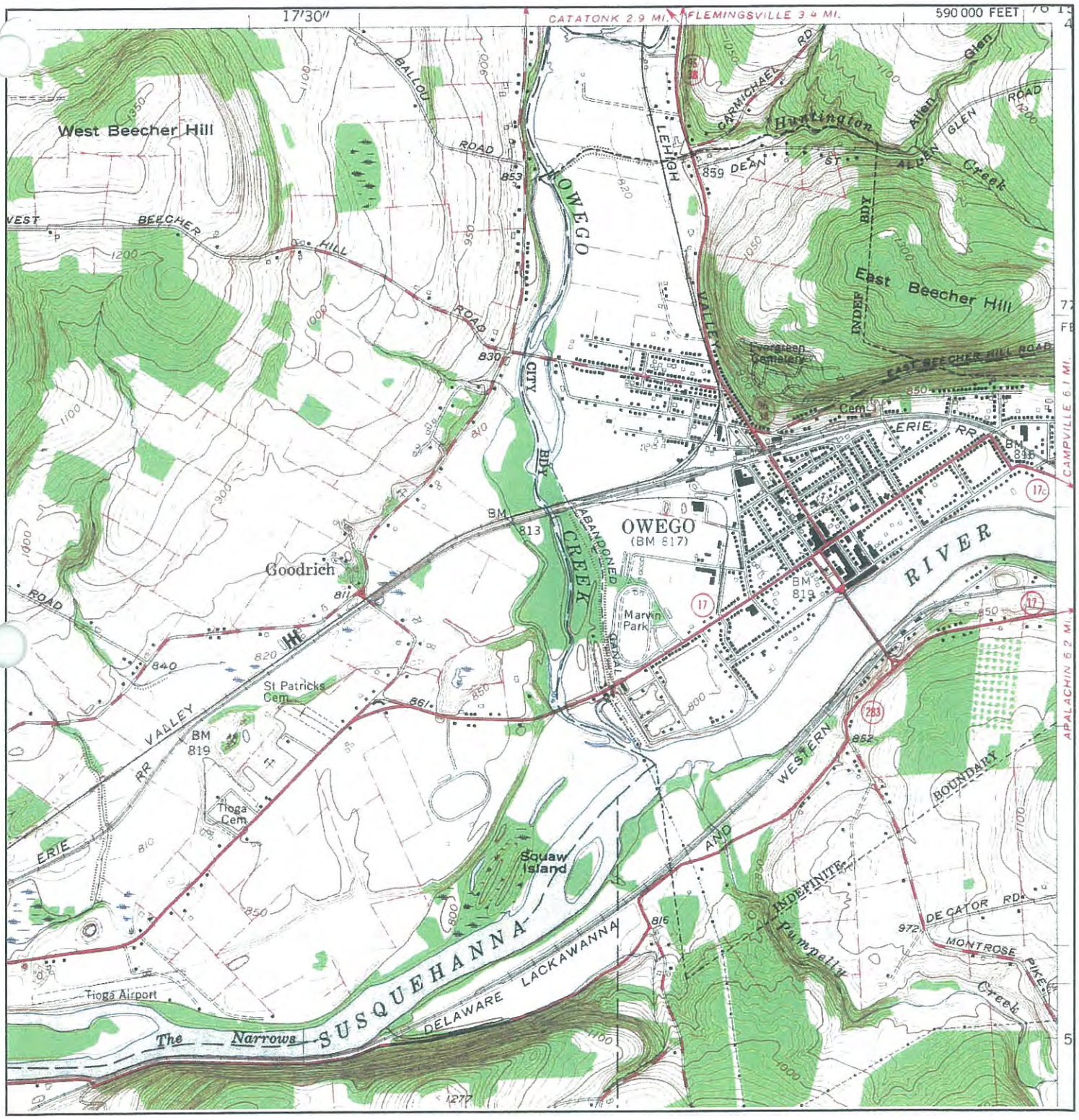

N	TARGET QUAD NAME: OWEGO MAP YEAR: 1956 SERIES: 7.5 SCALE: 1:24000	SITE NAME: Owego School ADDRESS: 1 Christa Mcauliffe Drive Owego, NY 13827 LAT/LONG: 42.1129 / -76.2738	CLIENT: Ecological Analysis LLC CONTACT: James Bates INQUIRY#: 3461918.4 RESEARCH DATE: 11/26/2012

Historical Topographic Map

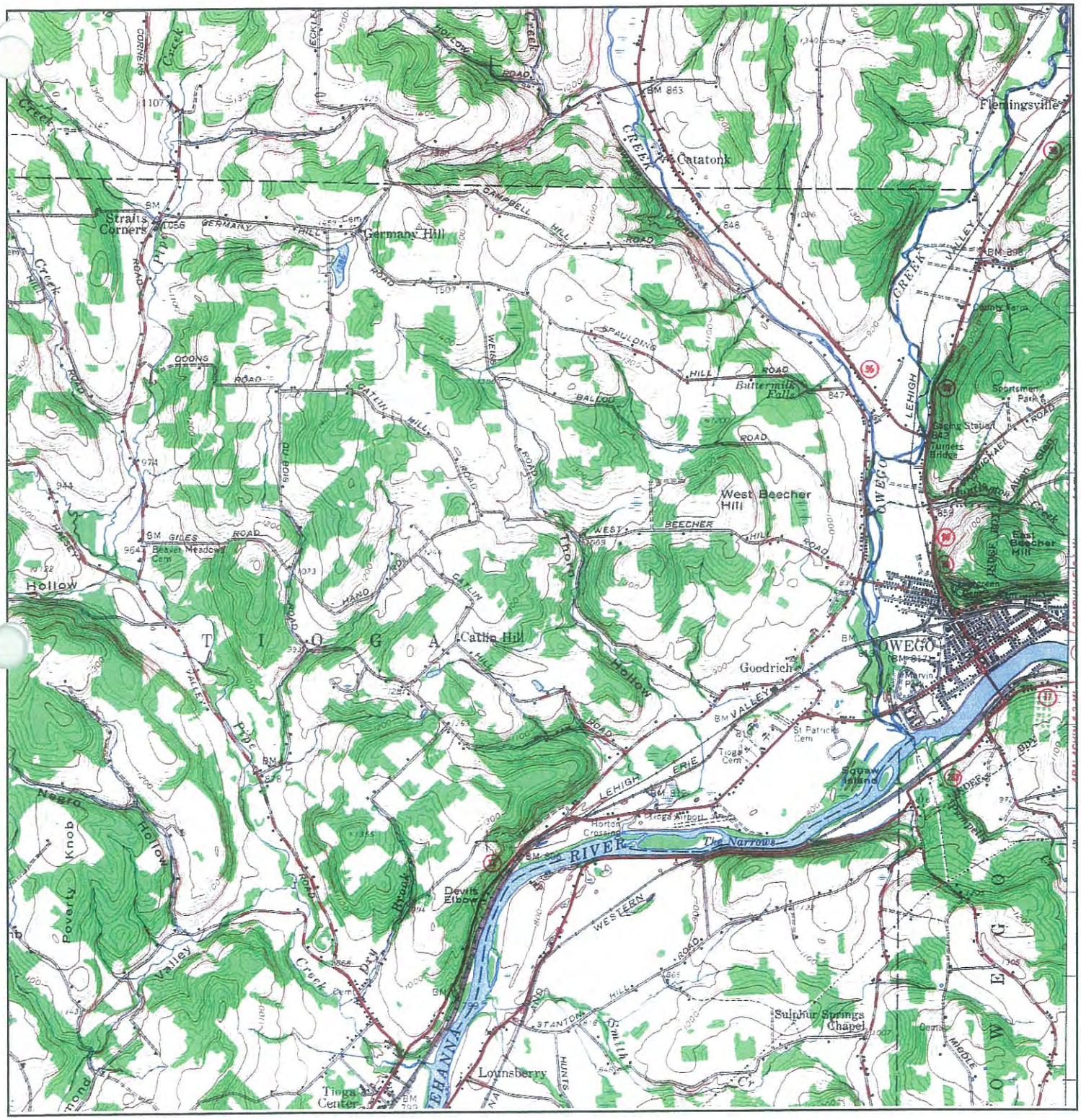

N	TARGET QUAD NAME: OWEGO MAP YEAR: 1956 SERIES: 15 SCALE: 1:62500	SITE NAME: Owego School ADDRESS: 1 Christa Mcauliffe Drive Owego, NY 13827 LAT/LONG: 42.1129 / -76.2738	CLIENT: Ecological Analysis LLC CONTACT: James Bates INQUIRY#: 3461918.4 RESEARCH DATE: 11/26/2012

Historical Topographic Map

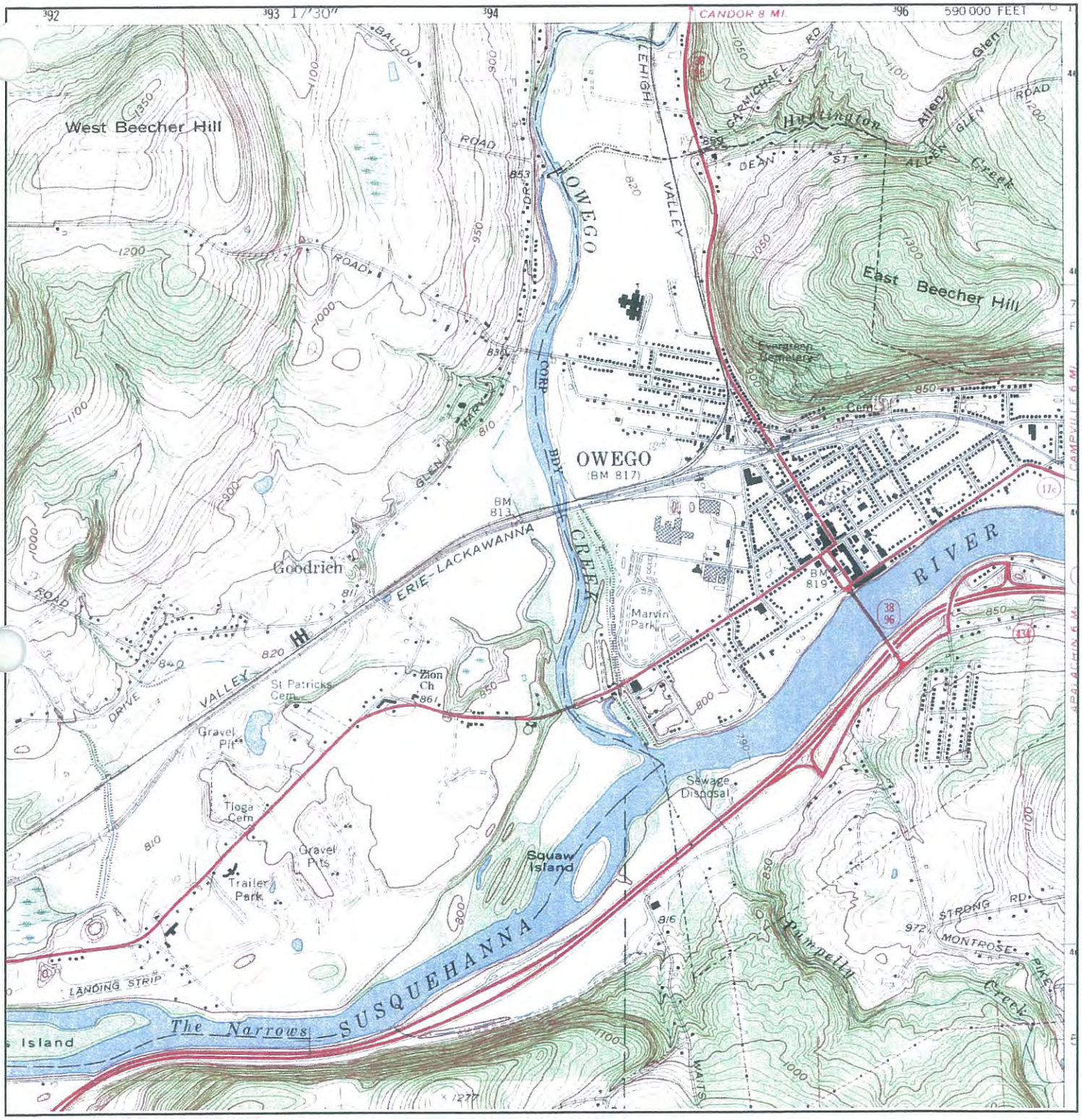

N	TARGET QUAD NAME: OWEGO MAP YEAR: 1969 SERIES: 7.5 SCALE: 1:24000	SITE NAME: Owego School ADDRESS: 1 Christa Mcauliffe Drive Owego, NY 13827 LAT/LONG: 42.1129 / -76.2738	CLIENT: Ecological Analysis LLC CONTACT: James Bates INQUIRY#: 3461918.4 RESEARCH DATE: 11/26/2012

Owego School
1 Christa Mcauliffe Drive
Owego, NY 13827

Inquiry Number: 3461918.7
December 3, 2012

The EDR Environmental LienSearch™ Report

EDR® Environmental Data Resources Inc

440 Wheelers Farms Road
Milford, CT 06461
800.352.0050
www.edrnet.com

EDR Environmental LienSearch™ Report

The EDR Environmental LienSearch Report provides results from a search of available current land title records for environmental cleanup liens and other activity and use limitations, such as engineering controls and institutional controls.

A network of professional, trained researchers, following established procedures, uses client supplied address information to:

- search for parcel information and/or legal description;
- search for ownership information;
- research official land title documents recorded at jurisdictional agencies such as recorders' offices, registries of deeds, county clerks' offices, etc.;
- access a copy of the deed;
- search for environmental encumbering instrument(s) associated with the deed;
- provide a copy of any environmental encumbrance(s) based upon a review of key words in the instrument(s) (title, parties involved, and description); and
- provide a copy of the deed or cite documents reviewed.

Thank you for your business.
Please contact EDR at 1-800-352-0050
with any questions or comments.

Disclaimer - Copyright and Trademark Notice

This report was prepared for the use of Environmental Data Resources, Inc., and NCO Financial Services, Inc., exclusively. This report is neither a guarantee of title, a commitment to insure, or a policy of title insurance. **NO WARRANTY, EXPRESSED OR IMPLIED, IS MADE WHATSOEVER IN CONNECTION WTH THIS REPORT.** Environmental Data Resources, Inc. (EDR) and South Florida Title Research, Inc. specifically disclaim the making of any such warranties, including without limitation, merchantability or fitness for a particular use or purpose. The information contained in this report is retrieved as it is recorded from the various agencies that make it available. The total liability is limited to the fee paid for this report.

Copyright 2011 by Environmental Data Resources, Inc. All rights reserved. Reproduction in any media or format, in whole or in part, of any report or map of Environmental Data Resources, Inc., or its affiliates, is prohibited without prior written permission.

EDR and its logos are trademarks of Environmental Data Resources, Inc. or its affiliates. All other trademarks used herein are the property of their respective owners.

EDR Environmental LienSearch™ Report

TARGET PROPERTY INFORMATION

ADDRESS

OWEGO SCHOOL
1 Christa Mcauliffe Drive
Owego, NY 13827

RESEARCH SOURCE

Source 1: Tioga County, New York

PROPERTY INFORMATION

Deed 1:

Type of Deed:	Warranty
Title is vested in:	Central School District No. 1
Title received from:	John Kossey and Althea Kossey
Deed Dated:	June 19, 1964
Deed Recorded:	June 23, 1964
Book:	317
Page:	950

Legal Description:	**Attached as Deed Exhibit**
Legal Current Owner:	**Central School District No. 1**
Property Identifiers:	**117.15 2 13**
Comments:	

ENVIRONMENTAL LIEN

Environmental Lien: Found ☐ Not Found ☒

OTHER ACTIVITY AND USE LIMITATIONS (AULs)

Other AUL's: Found ☐ Not Found ☒

COMMENTS:

EDR Environmental LienSearch™ Report

DEED EXHIBIT

FORM 883X N. Y. DEED—WARRANTY with Lien Covenant (Laws of 1917, Chap. 681, Chap. 621, Laws of 1952)

TUTTLE LAW BLANKS U.S. PAT. OFFICE Tuttle Law Print Publishers, Rutland, Vt.

No. 317 PAGE 950

This Indenture

Made the 19th *day of* June

Nineteen Hundred and Sixty-four

Between JOHN KOSSEY and ALTHEA KOSSEY, of the Town of Owego, County of Tioga and State of New York (P.O. Address: Browns Lane, Owego, New York)

parties of the first part, and

CENTRAL SCHOOL DISTRICT NO. 1 of the Towns of Owego, Tioga, Nichols, Candor and Newark Valley, Tioga County, New York, a municipal corporation having its office at 90 Temple Street in the Village of Owego, Tioga County, New York

party of the second part,

Witnesseth *that the parties of the first part, in consideration of* ----------

----------One----------*Dollar* ($ 1.00----)

lawful money of the United States, and other good and valuable consideration *paid by the party of the second part, do hereby grant and release unto the party of the second part,* its successors *and assigns forever, all* THAT TRACT OR PARCEL OF LAND situate in the Village of Owego, County of Tioga, State of New York, beginning at a point on the northerly boundary of George Street at its intersection with the division line between the properties of Edward C. Davis on the west and John Kossey on the east; thence northerly along the last mentioned division line 240 feet to an iron pin in the northeast corner of lands of Edward C. Davis; thence westerly along the north line of lands of Edward C. Davis and Albert Brink and Leah Ames Brink 160.2 feet to an iron pin in the division line between the properties of Douglas L. Grant and Laura A. Grant on the west and Althea Kossey and John Kossey on the east; thence northerly along the last mentioned division line 240 feet to a point on the division line between the properties of William Zurawecki and Jerry Zurawecki on the north and Althea Kossey and John Kossey on the south; thence easterly along the last mentioned division line 665 feet to a point; thence southerly at right angles to George Street 240 feet to a point in the southerly line of lands of Althea Kossey and John Kossey; thence westerly along said last mentioned line 225.2 feet to an iron pin in the northwest corner of lands of John Kravec and Elaine W. Kravec; thence southerly along the west line of land of John Kravec and Elaine W. Kravec 240 feet to the northerly boundary of George Street; thence westerly along the last mentioned boundary 279.6 feet to the point of beginning, being 5.4 acres more or less.

TOGETHER WITH all the right, title and interest of the grantors in and to all streets, lanes and rights of way that may be included within the above described tract or parcel of land; and the grantors hereby intend to and do surrender and extinguish all right, title and interest in and to said streets, lanes and rights of way that may be included within the above described tract or parcel of land.

ALSO, TOGETHER WITH all right, title and interest to any streets, lanes or rights of way, if any, leading from above described tract or parcel of land to George Street and over other lands being conveyed by William Zurawecki and Jerry Zurawecki to grantee herein by deed dated June 19, 1964, provided that such streets, lanes or rights of way to George Street and over lands described in said deed from Zurawecki to grantee herein are no part of lands and other rights retained by grantors out of lands formerly conveyed to herein grantors by virtue of the warranty deeds referred to in hereinbelow being clause.

7

Being part of the same premises conveyed by Althea Kossey (formerly known as Althea Walchuk) to John Kossey and Althea Kossey, grantors herein, by warranty deed dated and recorded June 13, 1957, in Liber 271 of deeds at page 484 in Tioga County Clerk's Office; and being in part all of the same premises conveyed by Boyd J. Hulbirt and Helen E. Hulbirt to John Kossey, a grantor herein, by warranty deed dated and recorded May 18, 1946, in Liber 240 of deeds at page 34 in Tioga County Clerk's Office.

Together with the appurtenances and all the estate and rights of the part ies of the first part in and to said premises.

To have and to hold the premises herein granted unto the part y of the second part, its successors and assigns forever.

And said parties of the first part covenant as follows:

First, That the part y of the second part shall quietly enjoy the said premises;

Second, That said parties of the first part will forever Warrant the title to said premises.

Third, That, in Compliance with Sec. 13 of the Lien Law, the grantors will receive the consideration for this conveyance and will hold the right to receive such consideration as a trust fund to be applied first for the purpose of paying the cost of the improvement and will apply the same first to the payment of the cost of the improvement before using any part of the total of the same for any other purpose.

In Witness Whereof, the part ies of the first part have hereunto set their hand s and seals the day and year first above written.

In Presence of

John Kossey

Althea Kossey

State of New York
County of Tioga } ss. On this 19th day of June Nineteen Hundred and Sixty-four before me, the subscriber, personally appeared

JOHN KOSSEY and ALTHEA KOSSEY

to me personally known and known to me to be the same persons described in and who executed the within instrument, and they acknowledged to me that they executed the same.

Benjamin E. Dean
Notary Public

Recorded on the 22 day of June 19 64
at 2:55 o'clock P. M.
Tioga County Clerk

BENJAMIN E. DEAN
Notary Public, State of New York
No. 31-7[illegible]
Residing in Tioga County
Certificate filed in Tioga County
Commission Expires March 30, 1965

REPORT

ON

ENVIRONMENTAL SITE SURVEY

FOR

NORTH ELEMENTARY SCHOOL

EXCEL PROJECT

OWEGO, NEW YORK

BY

RGONZALEZ CONSULTING INC.

8 Lakewood Drive, Orchard Park, NY 14127

REPORT
ENVIRONMENTAL SITE SURVEY
OWEGO-APALACHIN CENTRAL SCHOOL DISTRICT – EXCEL PROJECT
OWEGO NORTH ELEMENTARY SCHOOL
OWEGO, NEW YORK

EXECUTIVE SUMMARY

Highland Associates retained the services of RGonzalez Consulting Inc., (RGC) to conduct Environmental Project Management for the Owego-Apalachin Central School District Excel Project in Owego, New York and Apalachin, New York. The project involves the renovation of three schools:

Apalachin Elementary School, located at 405 Pennsylvania Avenue, Apalachin, New York,

Owego North Elementary School, located at 1 Christa McAulife Lane, Owego, New York, and

Owego Free Academy, located at 1 Sheldon Boulevard, Owego, New York.

Please note that this is a summary. The Asbestos Survey and other test results must be viewed in their entirety. The pertinent reports, data and laboratory test results are included in this report.

An Environmental Site walk through was conducted by RGC on July 2, 2008, together with Highland Associates and Owego-Apalachin Central School administration. This was followed by Environmental Sampling and Testing by RGC's subcontractor Envoy Environmental Consultants Inc., (EEC) from July 21 to August 1, 2008. The following is a summary of the results from the Sampling, Testing and Evaluation indicating the areas of concern:

A. LEAD

Lead based paint was widely used throughout the buildings.

The XRF Testing was not a full HUD testing, but is limited to the areas specified in the drawings (Design development progress set dated 6-27-08) provided by Highland Associates. The results are summarized in Appendix A of the XRF Lead Based Paint Inspection Report compiled by EEC.

A copy of the Report must be provided to purchasers, and made available to new tenants. Landlords and sellers are required to distribute educational pamphlets and include standard warning language in their leases or sales contracts, so that parents will have appropriate safety information.

All lead based paint should be inspected and maintained periodically.

B. ASBESTOS

The roofing materials were not sampled because the installer, Diamond Roofing Company Inc., submitted and affidavit stating that only asbestos free materials were used in the construction of the roofs.

Space by space summary is given on page 6 of the analytical report. Presence of asbestos was detected on the gray caulk on door frames in the Girls and Boys Locker room and Storage area, Laundry Room, and boiler room as well as the glaze and caulk on interior and exterior windows for a total of 13, 440 lin. feet.

In addition, presence of friable asbestos was detected on the white sparkle on walls in the Office/Nurse Area, a total of 3200 sq. feet, plus on the ceiling tiles and walls of the Speech Therapy Room and Kitchen Storage walls for an additional 1060 sq feet.

C. PCB

PCB was below detection level concentrations in all of the samples tested. However, it is noted that fluorescent light ballasts may contain PCB laden electrolytes.

D. SILICA

All plasters, Concrete materials, and Mortars contain silica. It does not pose a health threat in their present installed condition. Disturbance of plasters, concrete materials and mortars can generate excessive concentrations of dusts containing Silica. Therefore, protection from indoor air is of importance during the period of renovation.

E. MERCURY and MOLD

Sampling and Testing was not performed for any other hazardous material other than as outlined above for asbestos, lead and PCB. However, a visual survey was conducted during the week of August 6. Mercury is usually present in the Thermostats and fluorescent light tubes scheduled to be replaced. The removal must be treated as hazardous waste and disposed of in accordance with all applicable state and federal regulations.

While there were no obvious growths of molds during the inspection, a number of water stains on ceiling tiles were observed. Therefore, caution should be exercised when removing ceiling tiles for replacement, lifting old floor tiles, or breaking in to voids in walls, ceilings, chases and such. Any of these actions may result in the discovery of and release to the indoor air of molds.

Details of the survey, sampling, testing, and material analysis are contained in the attached reports and pertinent documentation from RGonzalez Consultants, Inc., Envoy Environmental Consultants, and Paradigm Environmental Services, the laboratory that performed material analysis.

D. SILICA

All plasters, Concrete materials, and Mortars contain silica. It does not pose a health threat in their present installed condition. Disturbance of plasters, concrete materials and mortars can generate excessive concentrations of dusts containing silica. Therefore, protection from indoor air is of importance during the period of renovation.

E. MERCURY and MOLD

Sampling and Testing was not performed for any other hazardous material other than as outlined above for asbestos, lead and PCB. However, a visual survey was conducted during the August 6. Mercury is usually present in the Thermostats and fluorescent light tubes scheduled to be replaced. The removal must be treated as hazardous waste and disposed of in accordance with all applicable state and federal regulations.

While there were no obvious growths of molds during the inspection, a number of water stains on ceiling tiles were observed. Therefore, caution should be exercised when removing ceiling tiles for replacement, lifting old floor tiles, or breaking in to voids in walls, ceilings, chases and such. Any of these actions may result in the discovery of and release to the indoor air of molds.

Details of the survey, sampling, testing, and material analysis are contained in the attached reports and pertinent documentation from RGonzalez Consultants, Inc., Envoy Environmental Consultants, and Paradigm Environmental Services, the laboratory that performed material analysis.

LIMITED
XRF LEAD BASED PAINT INSPECTION

at

Owego North Elementary
3 Sheldon Guile Boulevard
Owego, New York

Date of Construction: 1960's

Owned by:
Owego Central School District
36 Talcott Street
Owego, New York

Prepared for:

R. Gonzalez Consulting, Inc.
8 Lakewood Drive
Orchard Park, New York

7/21/2008-7/23/08

Report Prepared By:

Envoy Environmental Consultants
57 Ambrose Street, Rochester, New York 14608 (585) 454-1060

Owego North Elementary
3 Sheldon Guile Boulevard
Owego, New York 13827

TABLE OF CONTENTS

INTRODUCTION	Page 3
LIMITATIONS	Page 5
DEFINITIONS	Page 7
CONCLUSIONS	Page 10

APPENDIX A	SUMMARY of POSITIVE LEAD BASED PAINT READINGS
APPENDIX B	SEQUENTIAL INSTRUMENT DATA
APPENDIX C	LABORATORY REPORT for PAINT ANALYSIS
APPENDIX D	DRAWINGS
APPENDIX E	COMPONENT IDENTIFICATION SHEETS
APPENDIX F	CERTIFICATIONS

INTRODUCTION

Envoy Environmental Consultants, Inc. was retained by R. Gonzalez Consulting, Inc. on July 23, and July 24, 2008 to conduct an inspection for the presence of lead-based paint at the Owego North Elementary, Owego, New York.

The U.S. Department of Housing and Urban Development (HUD) and the U.S. Environmental Protection Agency (EPA) defines an inspection as a surface-by-surface investigation to determine the presence of lead-based paint.

Envoy Environmental Consultants, Inc. holds a New York State Department of Labor Radioactive Materials License to own and operate an X-Ray Fluorescence lead paint analyzer. EPA certified Lead Inspector, Geoff Bijak, conducted this inspection with procedures and guidelines required by New York State and EPA. The inspection was conducted on July 23, and July 24, 2008 at approximately 8:00 a.m. to 7:00 p.m.

The LPA-1 Lead Paint Analyzer is an analytical radiation instrument used in quantitative analysis of lead in paint for various substrates. The LPA-1 is a spectrum analyzer that resolves the lead X-Ray intensity from interfering radiation. The XRF LPA-1 instrument has a $^3/_8$ inch penetration depth for the detection of lead. Anything beyond this depth will cause no reading and can go undetected. The frequency of testing included XRF sampling of selected areas. These areas were tested based on proposed renovation work as outlined by Highland Associates.

Certain substrates may register a reading in the inconclusive range. They are as follows:

Substrate	Inconclusive Range
Brick	None
Concrete	None
Drywall	None
Metal	0.9 to 1.3 mg/cm^2
Plaster	0.9 to 1.0 mg/cm^2
Wood	None

The inspection at the Owego North Elementary generated several readings in the inconclusive range on metal substrates. Paint chip sampling was not conducted on those areas. A summary of those findings can be found in Appendix C of this report.

A radioactive material, Cobalt 57, is used as the radiation source in this device for nondestructive method of sample analysis. In order to verify the proper operation of the analyzer it is calibrated before each inspection.

LIMITATIONS

The information provided in this report was compiled from field notes and instrument data.

Observations noted and recorded are intended to represent the conditions that existed at the subject site at the time and date that the observations were made. All areas sampled are considered to be in good condition unless otherwise noted by an asterisk on the *Positive Lead Based Paint Readings* sheet included in this report. Any areas that have peeling or chipping paint are flagged with an asterisk.

Determinations of lead based paint within the building were subject to the accessibility of individual areas or spaces. Walls were assigned the letters A, B, C, or D for purposes of reading this report and understanding which wall in a particular room was sampled. The wall regarded as "A" will always be the address side wall. Walls B, C, and D shall follow clockwise in succession.

The XRF testing was limited to specific locations detailed by drawings provided by Highland Associates. This survey should not be used as a full HUD survey where each painted surface is tested throughout the school.

Conclusions and recommendations provided in this report are based on the assumption that materials identified are homogeneous throughout their application.

DEFINITIONS

Abatement: A measure or set of measures designed to permanently eliminate lead-based paint hazards or lead-based paint. Abatement strategies include the removal of lead-based paint, enclosure, encapsulation, replacement of building components coated with lead-based paint, removal of lead-contaminated dust, and removal of lead-contaminated soil or overlaying of soil with a durable covering such as asphalt (grass and sod are considered interim control measures). All of these strategies require preparation; cleanup; waste disposal; post abatement clearance testing; recordkeeping; and, if applicable, monitoring.

Friction surface- an interior or exterior surface that is subject to abrasion or friction, including, but not limited to, certain window, floor, and stair surfaces.

Impact surface- an interior or exterior surface that is subject to damage by repeated sudden force such as certain parts of door frames.

Interim controls: A set of measures designed to temporarily reduce human exposure or possible exposure to lead-based paint hazards. Such measures include specialized cleaning, repairs, maintenance, painting, temporary containment, and management and resident education programs. Monitoring, conducted by owners, and reevaluations, conducted by professionals, are integral elements of interim control. Interim controls include dust removal; paint film stabilization; treatment of friction and impact surfaces; installation of soil coverings, such as grass or sod; and land-use controls.

Lead-based paint - Lead-based paint means paint or surface coatings that contain lead equal to or greater than 1.0 mg/cm^2 or 0.5 percent by weight. (Equivalent units are: 5,000 μg/g, 5,000 mg/kg, or 5,000 ppm by weight) Surface coatings include paint shellac, varnish, or any other coating, including wallpaper which covers painted surfaces.

Room equivalent - A room equivalent is an identifiable part of a residence, such as a room, a house exterior, a foyer, staircase, hallway, or an exterior area (exterior areas contain items such as play areas, painted swing sets, painted sandboxes, etc.). Closets or other similar areas adjoining rooms should not be considered as separate room equivalents unless they are obvious equivalent. Most closets are not separate equivalents. Exteriors should be included in all inspections. An individual side of an exterior is not considered to be a separate room equivalent, unless there is visual or other evidence that its paint history is different from that of the other sides. All sides of a building (typically two for row houses or four for freestanding houses) are generally treated as a single room equivalent if the paint history appears to be similar. For multifamily developments or apartment buildings, common areas and exterior sites are treated as separate types of units, not as room equivalents.

Substrate - The substrate is the material underneath the paint. Substrates should be classified into one of six types: brick, concrete, drywall, metal, plaster, or wood. These substrates cover almost

all building materials that are painted and are linked to those used in the *XRF Performance Characteristic Sheets*.

Testing Combination - A testing combination is a unique combination of room equivalent, building component type, and substrate. Visible color may not be an accurate predictor of painting history and is not included in the definition of a testing combination. Table 7.1 lists common building component types that could make up distinct testing combinations within room equivalents. The list is not intended to be complete. Unlisted components that are coated with paint, varnish, shellac, wallpaper, stain, or other coating should also be considered as a separate testing combination. Certain building components that are adjacent to each other and not likely to have different painting histories can be grouped together into a single testing combination, as follows:

- Window casings, stops, jambs and aprons are a single testing combination.
- Interior window mullions and window sashes are a single testing combination--do not group interior mullions and sashes with exterior mullions and sashes.
- Exterior window mullions and window sashes are a single testing combination
- Door jambs, stops, transoms, casings and other door frame parts are a single testing combination.
- Door stiles, rails, panels, mullions and other door parts are a single testing combination.
- Baseboards and associated trim (such as quarter-round or other caps) are a single testing combination (do not group chair rails, crown molding or walls with baseboards)
- Painted electrical sockets, switches or plates can be grouped with walls. Each of these building parts should be tested separately if there is some specific reason to believe that they have a different painting history. In most cases, separate testing will not be necessary.

XRF analyzer: An instrument that determines lead concentration in milligrams per square centimeter (mg/cm2) using the principle of x-ray fluorescence (XRF). Two types of XRF analyzers are used—direct readers and spectrum analyzers. In these *Guidelines*, the term XRF analyzer only refers to portable instruments manufactured to analyze paint, and does not refer to laboratory-grade units or portable instruments designed to analyze soil.

Source: EPA

CONCLUSIONS

A lead-based paint survey was performed by Envoy Environmental Consultants, Inc. at the Owego North Elementary, Owego, New York. The inspection was conducted on July 23, and July 24, 2008.

Appendix A includes all positive lead based paint readings, which indicate the components that were determined to have instrument readings at or over the HUD abatement level of 1.0 mg/cm^2. *Our investigation at the Owego North Elementary found several applications of lead based paint applied to the specific areas tested.* Appendix B indicates each reading taken by the LPA-1 Lead Paint Analyzer. When dealing with a lead based paint hazard, it is recommended an EPA certified contractor perform the corrective response action.

A copy of this report is required to be submitted to new lessees or tenants and purchasers of Owego North Elementary, Owego, New York , under Federal law (24 CFR part 35 and 40 CFR part 745) before they become obligated under a lease or sales contract. The complete report must also be provided to new purchasers and it must be available to new tenants. Landlords and sellers are also required to distribute an educational pamphlet and include standard warning language in their leases or sales contracts to ensure that parents have the information they need to protect their children form lead based paint hazards.

Note: All lead-based paints should be inspected and maintained periodically. These paints must be handled with care and disturbances should be minimized. Abatement strategies for lead paint include the following: interim controls, replacement, encapsulation, and paint removal.

APPENDIX A

SUMMARY OF POSITIVE LEAD BASED PAINT READINGS

APPENDIX A

SUMMARY OF POSITIVE LEAD BASED PAINT READINGS

POSITIVE LEAD- BASED PAINT READINGS

OWEGO NORTH ELEMENTARY
3 SHELDON GUILE BOULEVARD
OWEGO, NEW YORK

Read #	*Location*	*Color*	*Substrate*	*Item*
423	Exterior Café	Blue	Metal	D Wall Upper
424	Exterior Café	Blue	Metal	D Wall Lower
425	Exterior Main Office	Blue	Metal	D Wall
426	Exterior Room 250	Blue	Metal	Louver
427	Exterior Room 208	Blue	Metal	Louver
428	Exterior Room 207	Blue	Metal	D Wall
431	Exterior Room 303	Brown	Vinyl	Louver
432	Exterior Room 303	Brown	Metal	D Wall
433	Exterior Room 318	Blue	Metal	Louver
434	Exterior Room 318	Blue	Metal	B Wall
011	Room 147	Green	Concrete	B Wall
015	Room 147 Toilet Room	Green	Ceramic	D Wall
020	Room 148 Storage	Brown	Metal	Door Casing
021	Room 148 Storage	Brown	Metal	Door Jamb
023	Room 147 Bath	Brown	Metal	Door Casing
024	Room 147 Bath	Brown	Metal	Door Jamb
027	Room 147 Door	Brown	Metal	Door Casing
028	Room 147 Door	Brown	Metal	Door Jamb
030	Room 142	Brown	Wood	Door Casing
031	Room 142	Brown	Wood	Door Jamb
035	Boiler Room	Brown	Metal	Door
036	Boiler Room	Brown	Metal	Door Casing
037	Boiler Room	Brown	Metal	Door Jamb
039	Storage Room 150	Brown	Metal	Door Casing
040	Storage Room 150	Brown	Metal	Door Jamb
042	Kitchen Room 151	Brown	Metal	B Wall Door Casing
043	Kitchen Room 151	Brown	Metal	B Wall Door Jamb
044	Kitchen Room 151	Green	Ceramic	D Wall
046	Kitchen Room 151	Green	Ceramic	A Wall
048	Kitchen Room 151	Brown	Metal	A Wall Door Casing
049	Kitchen Room 151	Brown	Metal	A Wall Door Jamb

* Indicates paint in peeling or chipping condition.

POSITIVE LEAD- BASED PAINT READINGS

051	Café	Blue	Metal	Window Casing
067	Practice Room 156	Brown	Metal	Door Casing
070	Practice Room 155	Brown	Metal	Door Casing
081	Boy's Locker Room	Brown	Metal	A Wall Door Casing
078	Boy's Locker Room	Brown	Metal	D Wall Door Casing
079	Boy's Locker Room	Brown	Metal	D Wall Door Jamb
086	Boy's Locker Room	Brown	Metal	A Wall Door Casing
083	Coach's Office	Brown	Metal	A Wall Door Casing
084	Coach's Office	Brown	Metal	A Wall Door Jamb
089	Gym Storage	Brown	Metal	Door Casing
090	Gym Storage	Brown	Metal	Door Jamb
093	Gym	Brown	Metal	Door Casing
094	Gym	Brown	Metal	Door Jamb
106	Gym	Brown	Metal	Door Casing
107	Gym	Brown	Metal	Door Jamb
102	Girl's Gym Storage	Brown	Metal	Door Casing
103	Girl's Gym Storage	Brown	Metal	Door Jamb
110	Girl's Locker Room	Brown	Metal	C Wall Door Casing
111	Girl's Locker Room	Brown	Metal	C Wall Door Jamb
109	Girl's Locker Room	Brown	Wood	C Wall Door
113	Girl's Locker Room	Brown	Metal	D Wall Door Casing
114	Girl's Locker Room	Brown	Metal	D Wall Door Jamb
128	Men's Room 115	Brown	Concrete	C Wall
133	Room 104	Brown	Ceramic	A Wall
135	Women's Room 115	Blue	Concrete	A Wall
136	Women's Room 115	Blue	Concrete	B Wall
137	Women's Room 115	Blue	Concrete	C Wall
138	Women's Room 115	Blue	Concrete	D Wall
207	Boy's Toilet Room Corridor 304	Brown	Concrete	A Wall
208	Boy's Toilet Room Corridor 304	Brown	Concrete	B Wall
209	Boy's Toilet Room Corridor 304	Brown	Concrete	C wall
211	Boy's Toilet Room Corridor 304	White	Ceramic	Toilet
214	Girl's Bath Room 304	Blue	Concrete	A Wall
215	Girl's Bath Room 304	Blue	Concrete	B Wall
216	Girl's Bath Room 304	Blue	Concrete	C Wall
217	Girl's Bath Room 304	Blue	Concrete	D Wall
375	Ladies Bath Room 233	Brown	Metal	Door Casing
376	Ladies Bath Room 233	Brown	Metal	Door Jamb

* Indicates paint in peeling or chipping condition.

POSITIVE LEAD- BASED PAINT READINGS

387	Men's Bathroom	Brown	Metal	Door Casing
388	Men's Bathroom	Brown	Metal	Door Jamb
402	Nurse's Office Storage	White	Wood	Shelf
415	Nurse's Office Storage	Brown	Metal	Door Casing
416	Nurse's Office Storage	Brown	Metal	Door Jamb

* Indicates paint in peeling or chipping condition.

SUMMARY REPORT OF LEAD PAINT INSPECTION FOR: R. Gonzalez Consulting Inc.

Inspection Date: 07/23/08
Report Date: 8/7/2008
Abatement Level: 1.0
Report No. 07/23/08 17:15
Total Readings: 448 Actionable: 74
Job Started: 07/23/08 17:15
Job Finished: 07/24/08 18:19

Owego North Elementary
3 Sheldon Guile Boulevard
Owego, New York

Reading No.	Wall	Structure	Location	Member	Paint Cond	Substrate	Color	Lead (mg/cm²)	Mode
Exterior Room 002 Cafe									
424	D	Wall	L Ctr		I	Metal	Blue	4.9	QM
423	D	Wall	U Ctr		I	Metal	Blue	4.6	QM
Exterior Room 003 MainOffice									
425	D	Wall	U Ctr		I	Metal	Blue	5.8	QM
Exterior Room 004 Room 250									
426	D	Louver	Ctr		I	Metal	Blue	4.4	QM
Exterior Room 005 Room 207									
428	D	Wall	U Ctr		I	Metal	Blue	5.7	QM
427	D	Louver	Ctr		I	Metal	Blue	4.2	QM
Exterior Room 007 Room 303									
432	D	Wall	U Ctr		I	Metal	Brown	6.3	QM
431	D	Louver	Ctr		I	Metal	Brown	4.0	QM
Exterior Room 008 Room 318									
434	B	Wall	U Ctr		I	Metal	Blue	6.2	QM
433	B	Louver	Ctr		I	Metal	Blue	4.6	QM
Interior Room 002 Room 147									
011	B	Wall	U Ctr		I	Concrete	Green	1.9	QM
Interior Room 003 Rm147Toilet									
015	D	Wall	U Ctr		I	Ceramic	Green	1.6	QM
Interior Room 004 Rm148Storag									
020	B	Door	Ctr	Lft casing	I	Metal	Brown	3.6	QM
021	B	Door	Ctr	Lft jamb	I	Metal	Brown	3.8	QM
Interior Room 005 Rm147Bath									
023	B	Door	Ctr	Lft casing	I	Metal	Brown	2.0	QM
024	B	Door	Ctr	Lft jamb	I	Metal	Brown	3.2	QM
Interior Room 006 Rm147Door									
027	B	Door	Ctr	Lft casing	I	Metal	Brown	2.6	QM
028	B	Door	Ctr	Lft jamb	I	Metal	Brown	3.6	QM
Interior Room 007 Rm142									
030	D	Door	Ctr	Lft casing	I	Wood	Brown	1.8	QM
031	D	Door	Ctr	Lft jamb	I	Wood	Brown	3.2	QM
Interior Room 008 BoilerRm									
036	B	Door	Ctr	Lft casing	I	Metal	Brown	1.6	QM
037	B	Door	Ctr	Lft jamb	I	Metal	Brown	2.6	QM
035	B	Door	Ctr	U Ctr	I	Metal	Brown	1.5	QM
Interior Room 009 StoreRm150									

SUMMARY REPORT OF LEAD PAINT INSPECTION FOR: R. Gonzalez Consulting Inc.

Reading No.	Wall	Structure	Location	Member	Paint Cond	Substrate	Color	Lead (mg/cm²)	Mode
039	B	Door	Ctr	Lft casing	I	Metal	Brown	1.9	QM
040	B	Door	Ctr	Lft jamb	I	Metal	Brown	2.6	QM
Interior Room 010 Kitchen151									
046	A	Wall	U Ctr		I	Ceramic	Green	1.9	QM
048	A	Door	Ctr	Lft casing	I	Metal	Brown	2.5	QM
049	A	Door	Ctr	Lft jamb	I	Metal	Brown	2.7	QM
042	B	Door	Ctr	Lft casing	I	Metal	Brown	2.1	QM
043	B	Door	Ctr	Lft jamb	I	Metal	Brown	3.1	QM
044	D	Wall	U Ctr		I	Ceramic	Green	2.0	QM
Interior Room 011 Cafe									
051	A	W. Case	Ctr		I	Metal	Blue	1.0	QM
Interior Room 014 Practice156									
067	D	Door	Ctr	Lft casing	I	Metal	Brown	2.1	QM
Interior Room 015 Practice155									
070	D	Door	Ctr	Lft casing	I	Metal	Brown	2.6	QM
Interior Room 016 BoysLocker									
081	A	Door	Ctr	Lft casing	I	Metal	Brown	3.0	QM
078	D	Door	Ctr	Lft casing	I	Metal	Brown	3.4	QM
079	D	Door	Ctr	Lft jamb	I	Metal	Brown	4.9	QM
Interior Room 017 CoachOffice									
083	A	Door	Ctr	Lft casing	I	Metal	Brown	2.6	QM
084	A	Door	Ctr	Lft jamb	I	Metal	Brown	3.7	QM
Interior Room 018 BoysLocker									
086	A	Door	Ctr	Lft casing	I	Metal	Brown	2.8	QM
Interior Room 019 GymStorage									
089	A	Door	Ctr	Lft casing	I	Metal	Brown	3.0	QM
090	A	Door	Ctr	Lft jamb	I	Metal	Brown	3.4	QM
Interior Room 021 Gym									
094	D	Door	Ctr	Lft jamb	I	Metal	Brown	2.5	QM
093	D	Door	Ctr	Lft casing	I	Metal	Brown	2.2	QM
Interior Room 022 GirlsGymSto									
102	B	Door	Ctr	Lft casing	I	Metal	Brown	3.2	QM
103	B	Door	Ctr	Lft jamb	I	Metal	Brown	3.6	QM
Interior Room 023 Gym									
106	D	Door	Ctr	Lft casing	I	Metal	Brown	4.7	QM
107	D	Door	Ctr	Lft jamb	I	Metal	Brown	5.4	QM
Interior Room 024 GirlsLocker									
110	C	Door	Ctr	Lft casing	I	Metal	Brown	2.0	QM
111	C	Door	Ctr	Lft jamb	I	Metal	Brown	2.9	QM
109	C	Door	Ctr	U Ctr	I	Wood	Brown	2.5	QM
113	D	Door	Ctr	Lft casing	I	Metal	Brown	1.7	QM
114	D	Door	Ctr	Lft jamb	I	Metal	Brown	3.4	QM
Interior Room 027 MensRmC115									
128	C	Wall	U Ctr		I	Concrete	Brown	1.0	QM

SUMMARY REPORT OF LEAD PAINT INSPECTION FOR: R. Gonzalez Consulting Inc.

Reading No.	Wall	Structure	Location	Member	Paint Cond	Substrate	Color	Lead (mg/cm²)	Mode
Interior Room 028 Room 104									
133	A	Wall	U Ctr		I	Ceramic	Brown	1.0	QM
Interior Room 029 WomenRmC115									
135	A	Wall	U Ctr		I	Concrete	Blue	1.5	QM
136	B	Wall	U Ctr		I	Concrete	Blue	1.8	QM
137	C	Wall	U Ctr		I	Concrete	Blue	1.9	QM
138	D	Wall	U Ctr		I	Concrete	Blue	1.5	QM
Interior Room 045 BoyToiletRm									
207	A	Wall	U Ctr		I	Concrete	Brown	1.0	QM
211	A	Toilet	Ctr		I	Ceramic	White	2.7	QM
208	B	Wall	U Ctr		I	Concrete	Brown	1.0	QM
209	C	Wall	U Ctr		I	Concrete	Brown	1.0	QM
Interior Room 047 GirlsBathRm									
214	A	Wall	U Ctr		I	Concrete	Blue	2.2	QM
215	B	Wall	U Ctr		I	Concrete	Blue	1.8	QM
216	C	Wall	U Ctr		I	Concrete	Blue	1.7	QM
217	D	Wall	U Ctr		I	Concrete	Blue	1.6	QM
Interior Room 088 LadiesBath									
375	C	Door	Ctr	Lft casing	I	Metal	Brown	1.0	QM
376	C	Door	Ctr	Lft jamb	I	Metal	Brown	2.3	QM
Interior Room 089 MenBathRm									
387	D	Door	Ctr	Lft casing	I	Metal	Brown	1.6	QM
388	D	Door	Ctr	Lft jamb	I	Metal	Brown	3.1	QM
Interior Room 090 NurseStorag									
402	D	Shelf	Ctr		I	Wood	White	1.0	QM
Interior Room 092 NurseStorag									
415	D	Door	Ctr	Lft casing	I	Metal	Brown	2.0	QM
416	D	Door	Ctr	Lft jamb	I	Metal	Brown	2.5	QM
Calibration Readings									
Calibration Readings									

---- End of Readings ----

APPENDIX B

SEQUENTIAL INSTRUMENT DATA

LEAD PAINT INSPECTION REPORT

REPORT NUMBER: 07/23/08 17:15

INSPECTION FOR: R. Gonzalez Consulting Inc.
8 Lakewood Drive
Orchard Park, new York

PERFORMED AT: Owego North Elementary
3 Sheldon Guile Boulevard
Owego, New York

INSPECTION DATE: 07/23/08

INSTRUMENT TYPE: R M D
MODEL LPA-1
XRF TYPE ANALYZER
Serial Number: 01091

ACTION LEVEL: 1.0 mg/cm²

OPERATOR LICENSE: NY-01-072003-515

Report Prepared By:
Envoy Environmental Consultants, Inc.
57 Ambrose Street
Rochester, New York 14608

SIGNED: _____ Date: 8-1-08

Geoff Bijak

SEQUENTIAL REPORT OF LEAD PAINT INSPECTION FOR: R. Gonzalez Consulting Inc.

spection Date: 07/23/08
Report Date: 8/7/2008
Abatement Level: 1.0
eport No. 07/23/08 17:15
otal Readings: 448
Job Started: 07/23/08 17:15
Job Finished: 07/24/08 18:19

Owego North Elementary
3 Sheldon Guile Boulevard
Owego, New York

Read No.	Rm No.	Room Name	Wall	Structure	Location	Member	Paint Cond	Substrate	Color	Lead (mg/cm²)	Mode
1		CALIBRATION								1.8	QM
2		CALIBRATION								1.8	QM
3		CALIBRATION								1.6	QM
4		CALIBRATION								0.0	QM
5		CALIBRATION								0.0	QM
6		CALIBRATION								-0.1	QM
7	001	Hallway-142	D	VentUnit	Ctr		I	Metal	Tan	-0.3	QM
8	001	Hallway-142	D	CoveMldg	Ctr		I	Vinyl	Brown	-0.3	QM
9	001	Hallway-142	D	Wall	U Ctr		I	Concrete	White	-0.1	QM
10	002	Room 147	B	VentUnit	Ctr		I	Metal	Tan	0.0	QM
11	002	Room 147	B	Wall	U Ctr		I	Concrete	Green	1.9	QM
12	002	Room 147	B	Floor			I	Ceramic	Green	-0.4	QM
13	002	Room 147	A	UnitHeater	Ctr		I	Metal	Gray	0.0	QM
14	003	Rm147Toilet	D	VentUnit	Ctr		I	Metal	Tan	0.0	QM
15	003	Rm147Toilet	D	Wall	U Ctr		I	Ceramic	Green	1.6	QM
16	004	Rm148Storag	D	VentUnit	Ctr		I	Metal	Tan	-0.2	QM
17	004	Rm148Storag	D	Wall	U Ctr		I	Concrete	Yellow	-0.1	QM
18	004	Rm148Storag	D	VentUnit	Ctr		I	Metal	Tan	-0.2	QM
19	004	Rm148Storag	B	Door	Ctr	U Ctr	I	Wood	Brown	-0.3	QM
20	004	Rm148Storag	B	Door	Ctr	Lft casing	I	Metal	Brown	3.6	QM
21	004	Rm148Storag	B	Door	Ctr	Lft jamb	I	Metal	Brown	3.8	QM
22	005	Rm147Bath	B	Door	Ctr	U Ctr	I	Wood	Brown	-0.1	QM
23	005	Rm147Bath	B	Door	Ctr	Lft casing	I	Metal	Brown	2.0	QM
24	005	Rm147Bath	B	Door	Ctr	Lft jamb	I	Metal	Brown	3.2	QM
25	005	Rm147Bath	B	Grille	Ctr		I	Metal	Brown	0.0	QM
26	006	Rm147Door	B	Door	Ctr	U Ctr	I	Wood	Brown	-0.2	QM
27	006	Rm147Door	B	Door	Ctr	Lft casing	I	Metal	Brown	2.6	QM
28	006	Rm147Door	B	Door	Ctr	Lft jamb	I	Metal	Brown	3.6	QM
29	007	Rm142	D	Door	Ctr	U Ctr	I	Wood	Brown	-0.1	QM
30	007	Rm142	D	Door	Ctr	Lft casing	I	Wood	Brown	1.8	QM
31	007	Rm142	D	Door	Ctr	Lft jamb	I	Wood	Brown	3.2	QM
32	007	Rm142	D	Wall	U Ctr		I	Concrete	Blue	-0.3	QM
33	007	Rm142	B	UnitVent	Ctr		I	Metal	White	-0.1	QM
34	008	BoilerRm	B	W Case	Ctr		I	Metal	Silver	-0.4	QM
35	008	BoilerRm	B	Door	Ctr	U Ctr	I	Metal	Brown	1.5	QM
36	008	BoilerRm	B	Door	Ctr	Lft casing	I	Metal	Brown	1.6	QM
37	008	BoilerRm	B	Door	Ctr	Lft jamb	I	Metal	Brown	2.6	QM
38	009	StoreRm150	B	Door	Ctr	U Ctr	I	Metal	Brown	-0.2	QM
39	009	StoreRm150	B	Door	Ctr	Lft casing	I	Metal	Brown	1.9	QM
40	009	StoreRm150	B	Door	Ctr	Lft jamb	I	Metal	Brown	2.6	QM
41	010	Kitchen151	B	Door	Ctr	U Ctr	I	Wood	Brown	-0.1	QM
42	010	Kitchen151	B	Door	Ctr	Lft casing	I	Metal	Brown	2.1	QM
43	010	Kitchen151	B	Door	Ctr	Lft jamb	I	Metal	Brown	3.1	QM
44	010	Kitchen151	D	Wall	U Ctr		I	Ceramic	Green	2.0	QM
45	010	Kitchen151	D	Ceiling			I	Metal	Silver	-0.2	QM
46	010	Kitchen151	A	Wall	U Ctr		I	Ceramic	Green	1.9	QM
47	010	Kitchen151	A	Left Door	Ctr		I	Wood	Brown	0.0	QM

SEQUENTIAL REPORT OF LEAD PAINT INSPECTION FOR: R. Gonzalez Consulting Inc.

Read No.	Rm No.	Room Name	Wall	Structure	Location	Member	Paint Cond	Substrate	Color	Lead (mg/cm²)	Mode
48	010	Kitchen151	A	Door	Ctr	Lft casing	I	Metal	Brown	2.5	QM
49	010	Kitchen151	A	Door	Ctr	Lft jamb	I	Metal	Brown	2.7	QM
50	011	Cafe	A	W. Case	Ctr		I	Metal	Blue	0.2	QM
51	011	Cafe	A	W. Case	Ctr		I	Metal	Blue	1.0	QM
52	011	Cafe	A	W. Case	Ctr		I	Metal	Blue	-0.5	QM
53	011	Cafe	A	Joist	Ctr		I	Metal	Tan	-0.1	QM
54	011	Cafe	B	Wall	U Ctr		I	Plaster	Blue	-0.1	QM
55	011	Cafe	B	Wall	U Lft		I	Plaster	Blue	-0.2	QM
56	011	Cafe	D	RUnitVent	Lft		I	Metal	Blue	-0.2	QM
57	011	Cafe	D	LUnitVent	Lft		I	Metal	Blue	-0.1	QM
58	011	Cafe	D	RCoveMold	Lft		I	Vinyl	Tan	0.1	QM
59	011	Cafe	D	LCoveMold	Lft		I	Vinyl	Tan	-0.2	QM
60	012	Stage	D	Wall	U Ctr		I	Concrete	Green	-0.3	QM
61	012	Stage	D	UnitVent	Ctr		I	Metal	Green	-0.1	QM
62	013	Storage158	D	Wall	U Ctr		I	Concrete	Yellow	0.2	QM
63	013	Storage158	D	UnitVent	Ctr		I	Metal	Tan	0.0	QM
64	013	Storage158	D	Wall	U Ctr		I	Concrete	Yellow	-0.3	QM
65	013	Storage158	D	CoveMldg	Ctr		I	Vinyl	Tan	-0.3	QM
66	014	Practice156	D	Door	Ctr	U Ctr	I	Wood	Brown	-0.2	QM
67	014	Practice156	D	Door	Ctr	Lft casing	I	Metal	Brown	2.1	QM
68	014	Practice156	D	Door	Ctr	Lft jamb	I	Metal	Brown	-0.4	QM
69	015	Practice155	D	Door	Ctr	U Ctr	I	Wood	Brown	-0.3	QM
70	015	Practice155	D	Door	Ctr	Lft casing	I	Metal	Brown	2.6	QM
71	015	Practice155	D	Door	Ctr	Lft jamb	I	Metal	Brown	-0.2	QM
72	016	BoysLocker	D	AHU	Ctr		I	Metal	Green	-0.2	QM
73	016	BoysLocker	D	Wall	U Ctr		I	Concrete	White	-0.1	QM
74	016	BoysLocker	D	UnitVent	Ctr		I	Metal	Tan	0.0	QM
75	016	BoysLocker	A	Wall	U Ctr		I	Concrete	Blue	0.0	QM
76	016	BoysLocker	C	Grille	Ctr		I	Metal	White	0.1	QM
77	016	BoysLocker	D	Door	Ctr	U Ctr	I	Wood	Brown	0.0	QM
78	016	BoysLocker	D	Door	Ctr	Lft casing	I	Metal	Brown	3.4	QM
79	016	BoysLocker	D	Door	Ctr	Lft jamb	I	Metal	Brown	4.9	QM
80	016	BoysLocker	A	Door	Ctr	U Ctr	I	Wood	Brown	-0.2	QM
81	016	BoysLocker	A	Door	Ctr	Lft casing	I	Metal	Brown	3.0	QM
82	017	CoachOffice	A	Door	Ctr	U Ctr	I	Wood	Brown	-0.2	QM
83	017	CoachOffice	A	Door	Ctr	Lft casing	I	Metal	Brown	2.6	QM
84	017	CoachOffice	A	Door	Ctr	Lft jamb	I	Metal	Brown	3.7	QM
85	018	BoysLocker	A	Door	Ctr	U Ctr	I	Wood	Brown	-0.1	QM
86	018	BoysLocker	A	Door	Ctr	Lft casing	I	Metal	Brown	2.8	QM
87	019	GymStorage	A	UnitVent	Ctr		I	Metal	Blue	-0.1	QM
88	019	GymStorage	A	Door	Ctr	U Ctr	I	Wood	Brown	0.0	QM
89	019	GymStorage	A	Door	Ctr	Lft casing	I	Metal	Brown	3.0	QM
90	019	GymStorage	A	Door	Ctr	Lft jamb	I	Metal	Brown	3.4	QM
91	020	BoysGymStor	C	Wall	U Ctr		I	Concrete	Red	0.1	QM
92	021	Gym	D	RightDoor	Ctr		I	Wood	Brown	-0.4	QM
93	021	Gym	D	Door	Ctr	Lft casing	I	Metal	Brown	2.2	QM
94	021	Gym	D	Door	Ctr	Lft jamb	I	Metal	Brown	2.5	QM
95	021	Gym	B	UnitVent	Ctr		I	Metal	White	-0.1	QM
96	021	Gym	B	Wall	U Ctr		I	Concrete	Blue	-0.2	QM
97	021	Gym	B	Wall	U Ctr		I	Concrete	White	-0.2	QM
98	021	Gym	B	UnitVent	Ctr		I	Metal	White	-0.1	QM
99	021	Gym	B	Wall	U Ctr		I	Concrete	Blue	-0.2	QM
100	021	Gym	B	Wall	L Ctr		I	Concrete	White	-0.2	QM
101	022	GirlsGymSto	B	Door	Ctr	U Ctr	I	Wood	Brown	-0.1	QM
102	022	GirlsGymSto	B	Door	Ctr	Lft casing	I	Metal	Brown	3.2	QM

SEQUENTIAL REPORT OF LEAD PAINT INSPECTION FOR: R. Gonzalez Consulting Inc.

Lead No.	Rm No.	Room Name	Wall	Structure	Location	Member	Paint Cond	Substrate	Color	Lead (mg/cm²)	Mode
103	022	GirlsGymSto	B	Door	Ctr	Lft jamb	I	Metal	Brown	3.6	QM
104	022	GirlsGymSto	A	Wall	U Ctr		I	Concrete	Red	0.0	QM
105	023	Gym	D	LeftDoor	Ctr		I	Wood	Brown	-0.1	QM
106	023	Gym	D	Door	Ctr	Lft casing	I	Metal	Brown	4.7	QM
107	023	Gym	D	Door	Ctr	Lft jamb	I	Metal	Brown	5.4	QM
108	024	GirlsLocker	D	Door	Ctr	U Ctr	I	Wood	Brown	-0.3	QM
109	024	GirlsLocker	C	Door	Ctr	U Ctr	I	Wood	Brown	2.5	QM
110	024	GirlsLocker	C	Door	Ctr	Lft casing	I	Metal	Brown	2.0	QM
111	024	GirlsLocker	C	Door	Ctr	Lft jamb	I	Metal	Brown	2.9	QM
112	024	GirlsLocker	D	Door	Ctr	U Ctr	I	Wood	Brown	-0.2	QM
113	024	GirlsLocker	D	Door	Ctr	Lft casing	I	Metal	Brown	1.7	QM
114	024	GirlsLocker	D	Door	Ctr	Lft jamb	I	Metal	Brown	3.4	QM
115	024	GirlsLocker	D	Wall	U Ctr		I	Concrete	White	-0.2	QM
116	024	GirlsLocker	D	UnitVent	Ctr		I	Metal	Tan	-0.1	QM
117	024	GirlsLocker	D	Grille	Ctr		I	Metal	Blue	-0.1	QM
118	024	GirlsLocker	A	Wall	L Ctr		I	Concrete	Red	-0.2	QM
119	025	Lobby100	A	Wall	U Ctr		I	Metal	Red	-0.1	QM
120	025	Lobby100	C	Wall	U Ctr		I	Metal	Red	-0.1	QM
121	025	Lobby100	C	UnitVent	Ctr		I	Metal	White	-0.1	QM
122	025	Lobby100	C	CoveMldg	Ctr		I	Vinyl	Tan	-0.2	QM
123	025	Lobby100	A	UnitVent	Ctr		I	Metal	White	-0.1	QM
124	025	Lobby100	A	CoveMldg	Ctr		I	Vinyl	Tan	-0.4	QM
125	026	MensRoom	A	Door	Ctr	U Ctr	I	Wood	Brown	-0.1	QM
126	026	MensRoom	A	Door	Ctr	Lft casing	I	Metal	Brown	-0.1	QM
127	027	MensRmC115	A	Door	Ctr	Lft jamb	I	Metal	Brown	0.0	QM
128	027	MensRmC115	C	Wall	U Ctr		I	Concrete	Brown	1.0	QM
129	027	MensRmC115	A	Wall	U Ctr		I	Concrete	Brown	0.4	QM
130	027	MensRmC115	B	Floor			I	Ceramic	Brown	-0.4	QM
131	027	MensRmC115	B	Wall	U Ctr		I	Concrete	Brown	0.5	QM
132	027	MensRmC115	D	Wall	U Ctr		I	Concrete	Brown	0.4	QM
133	028	Room 104	A	Wall	U Ctr		I	Ceramic	Brown	1.0	QM
134	028	Room 104	A	AccessHatch	Ctr		I	Metal	Tan	-0.2	QM
135	029	WomenRmC115	A	Wall	U Ctr		I	Concrete	Blue	1.5	QM
136	029	WomenRmC115	B	Wall	U Ctr		I	Concrete	Blue	1.8	QM
137	029	WomenRmC115	C	Wall	U Ctr		I	Concrete	Blue	1.9	QM
138	029	WomenRmC115	D	Wall	U Ctr		I	Concrete	Blue	1.5	QM
139	029	WomenRmC115	B	Floor			I	Ceramic	Blue	-0.5	QM
140	029	WomenRmC115	B	ExhaustFan	Ctr		I	Metal	Silver	-0.3	QM
141	030	TeacherLng	C	Wall	U Ctr		I	Drywall	Blue	-0.2	QM
142	030	TeacherLng	A	Radiator	Ctr		I	Metal	White	-0.2	QM
143	030	TeacherLng	A	Wall	U Ctr		I	Wall Board	White	-0.2	QM
144	030	TeacherLng	A	CoveMldg	Ctr		I	Vinyl	Brown	-0.4	QM
145	030	TeacherLng	A	UnitVent	Ctr		I	Metal	Brown	-0.2	QM
146	031	SpecEdRm112	C	Wall	U Ctr		I	Concrete	Yellow	-0.3	QM
147	031	SpecEdRm112	C	FinnedTube	Ctr		I	Metal	Tan	-0.1	QM
148	031	SpecEdRm112	C	Wall	L Ctr		I	Wall Board	Tan	-0.2	QM
149	031	SpecEdRm112	C	CoveMldg	Ctr		I	Vinyl	Brown	-0.5	QM
150	031	SpecEdRm112	C	UnitVent	Ctr		I	Metal	Brown	0.0	QM
151	031	SpecEdRm112	C	UnitVent	Ctr		I	Metal	Tan	0.0	QM
152	032	MediaCenter	C	Wall	U Ctr		I	Concrete	Yellow	0.0	QM
153	032	MediaCenter	A	FinnedTube	Ctr		I	Metal	White	-0.1	QM
154	032	MediaCenter	A	Wall	U Ctr		I	Metal	Tan	-0.1	QM
155	032	MediaCenter	A	CoveMldg	Ctr		I	Vinyl	Brown	-0.3	QM
156	032	MediaCenter	A	Window	Ctr	Sash	I	Metal	Red	-0.2	QM
157	032	MediaCenter	A	UnitVent	Ctr		I	Metal	Brown	-0.1	QM

SEQUENTIAL REPORT OF LEAD PAINT INSPECTION FOR: R. Gonzalez Consulting Inc.

Read No.	Rm No.	Room Name	Wall	Structure	Location	Member	Paint Cond	Substrate	Color	Lead (mg/cm²)	Mode
158	032	MediaCenter	A	UnitVent	Ctr		I	Metal	White	-0.1	QM
159	033	Room 117	A	Wall	U Ctr		I	Concrete	Yellow	-0.2	QM
160	033	Room 117	A	Window	Ctr	Lft casing	I	Metal	Yellow	0.3	QM
161	033	Room 117	A	ShelfUnit	Ctr		I	Metal	Tan	0.1	QM
162	033	Room 117	A	UnitVent	Ctr		I	Metal	Brown	0.1	QM
163	034	Room 116	A	Wall	U Ctr		I	Concrete	Yellow	0.0	QM
164	034	Room 116	C	Wall	U Ctr		I	Metal	Yellow	-0.2	QM
165	034	Room 116	C	Shelf	Ctr		I	Metal	Gray	-0.1	QM
166	034	Room 116	C	Shelf	Ctr		I	Metal	Yellow	-0.1	QM
167	034	Room 116	C	UnitVent	Ctr		I	Metal	Brown	-0.1	QM
168	035	Art Room	A	Wall	U Ctr		I	Concrete	Blue	-0.1	QM
169	035	Art Room	C	UnitVent	Ctr		I	Metal	Tan	0.0	QM
170	035	Art Room	C	Wall	U Ctr		I	Metal	Yellow	-0.2	QM
171	035	Art Room	C	UnitVent	Ctr		I	Metal	Black	0.1	QM
172	036	Corridor115	C	CeilingGrid	Ctr		I	Metal	Tan	-0.1	QM
173	036	Corridor115	C	Joist	Ctr		I	Metal	Tan	0.1	QM
174	036	Corridor115	C	RoofDeck	Ctr		I	Metal	Gray	0.2	QM
175	037	CompLab300	C	Wall	U Ctr		I	Concrete	Yellow	-0.2	QM
176	037	CompLab300	A	Wall	U Ctr		I	Metal	Yellow	0.0	QM
177	037	CompLab300	A	CoveMldg	Ctr		I	Vinyl	Tan	-0.1	QM
178	037	CompLab300	A	UnitVent	Ctr		I	Metal	Black	-0.2	QM
179	038	MathLab301	A	Wall	U Ctr		I	Concrete	Green	0.1	QM
180	039	GiftedRm322	A	Wall	U Ctr		I	Concrete	Yellow	0.0	QM
181	039	GiftedRm322	A	Joist	Ctr		I	Metal	Gray	-0.1	QM
182	039	GiftedRm322	A	Deck	Ctr		I	Metal	Gray	-0.1	QM
183	040	Room 316	A	Wall	U Ctr		I	Concrete	Blue	0.2	QM
184	040	Room 316	A	Window	Ctr	Lft casing	I	Metal	Blue	0.1	QM
185	040	Room 316	A	Shelf	Ctr		I	Metal	Tan	0.1	QM
186	040	Room 316	A	UnitVent	Ctr		I	Metal	Brown	-0.1	QM
187	041	Room 315	A	Wall	U Ctr		I	Concrete	Blue	-0.2	QM
188	041	Room 315	C	Wall	U Ctr		I	Metal	Blue	0.0	QM
189	041	Room 315	C	Shelf	Ctr		I	Metal	Tan	0.0	QM
190	041	Room 315	C	UnitVent	Ctr		I	Metal	Brown	0.1	QM
191	042	Room 313	C	Wall	U Ctr		I	Concrete	Blue	-0.6	QM
192	042	Room 313	A	Wall	U Ctr		I	Metal	Blue	-0.1	QM
193	042	Room 313	A	Shelf	Ctr		I	Metal	Tan	0.1	QM
194	042	Room 313	A	ShelfBase	Ctr		I	Metal	Black	0.0	QM
195	042	Room 313	A	Grille	Ctr		I	Metal	Tan	-0.1	QM
196	042	Room 313	A	UnitVent	Ctr		I	Metal	Black	0.2	QM
197	042	Room 313	A	Tile	Ctr		I	Vinyl	Tan	-0.2	QM
198	043	Room 312	C	Wall	U Ctr		I	Concrete	Blue	-0.2	QM
199	043	Room 312	A	Shelf	Ctr		I	Metal	Tan	0.1	QM
200	043	Room 312	A	ShelfBase	Ctr		I	Metal	Black	0.4	QM
201	043	Room 312	A	Floor			I	Vinyl	Tan	-0.2	QM
202	043	Room 312	A	Grille	Ctr		I	Metal	Tan	0.4	QM
203	043	Room 312	A	UnitVent	Ctr		I	Metal	Black	0.0	QM
204	044	Corridor314	A	UnitVent	Ctr		I	Metal	Tan	0.1	QM
205	044	Corridor314	A	Wall	U Ctr		I	Concrete	Yellow	-0.3	QM
206	044	Corridor314	A	CoveMldg	Ctr		I	Concrete	Tan	-0.1	QM
207	045	BoyToiletRm	A	Wall	U Ctr		I	Concrete	Brown	1.0	QM
208	045	BoyToiletRm	B	Wall	U Ctr		I	Concrete	Brown	1.0	QM
209	045	BoyToiletRm	C	Wall	U Ctr		I	Concrete	Brown	1.0	QM
210	045	BoyToiletRm	D	Wall	U Ctr		I	Concrete	Brown	0.5	QM
211	045	BoyToiletRm	A	Toilet	Ctr		I	Ceramic	White	2.7	QM
212	045	BoyToiletRm	C	Sink	Ctr		I	Ceramic	White	-0.1	QM

SEQUENTIAL REPORT OF LEAD PAINT INSPECTION FOR: R. Gonzalez Consulting Inc.

Lead No.	Rm No.	Room Name	Wall	Structure	Location	Member	Paint Cond	Substrate	Color	Lead (mg/cm²)	Mode
213	045	BoyToiletRm	B	Floor			I	Ceramic	Green	-0.2	QM
214	047	GirlsBathRm	A	Wall	U	Ctr	I	Concrete	Blue	2.2	QM
215	047	GirlsBathRm	B	Wall	U	Ctr	I	Concrete	Blue	1.8	QM
216	047	GirlsBathRm	C	Wall	U	Ctr	I	Concrete	Blue	1.7	QM
217	047	GirlsBathRm	D	Wall	U	Ctr	I	Concrete	Blue	1.6	QM
218	047	GirlsBathRm	B	Floor			I	Ceramic	Blue	-0.2	QM
219	047	GirlsBathRm	B	Sink		Ctr	I	Ceramic	White	-0.5	QM
220	047	GirlsBathRm	B	Toilet		Ctr	I	Ceramic	White	-0.2	QM
221	048	Room 306	D	Wall	U	Ctr	I	Concrete	White	0.0	QM
222	048	Room 306	D	Shelf		Ctr	I	Metal	Tan	-0.1	QM
223	048	Room 306	D	ShelfSupprt		Ctr	I	Metal	Black	-0.2	QM
224	048	Room 306	B	Floor			I	Vinyl	Green	0.7	QM
225	048	Room 306	B	UnitVent		Ctr	I	Metal	Black	-0.1	QM
226	048	Room 306	B	Wall	U	Ctr	I	Metal	Blue	-0.1	QM
227	049	Room 305	D	Wall	U	Ctr	I	Concrete	Blue	-0.1	QM
228	049	Room 305	B	Wall	U	Ctr	I	Metal	Blue	-0.4	QM
229	049	Room 305	B	Shelf		Ctr	I	Metal	Tan	0.3	QM
230	049	Room 305	B	UnitVent		Ctr	I	Metal	Black	-0.1	QM
231	050	Room 303	B	Wall	U	Ctr	I	Concrete	White	-0.2	QM
232	050	Room 303	D	Wall	U	Ctr	I	Metal	White	-0.2	QM
233	050	Room 303	D	Shelf		Ctr	I	Metal	White	0.6	QM
234	050	Room 303	D	UnitVent		Ctr	I	Metal	Black	-0.2	QM
235	051	Room 302	B	Wall	U	Ctr	I	Concrete	Blue	-0.1	QM
236	051	Room 302	D	Wall	U	Ctr	I	Metal	White	-0.1	QM
237	051	Room 302	D	Shelf		Ctr	I	Metal	Tan	-0.1	QM
238	051	Room 302	D	UnitVent		Ctr	I	Metal	Black	-0.1	QM
239	052	Corridor304	D	UnitVent		Ctr	I	Metal	Tan	-0.1	QM
240	052	Corridor304	B	Wall	U	Ctr	I	Concrete	White	-0.2	QM
241	052	Corridor304	B	CoveMldg		Ctr	I	Concrete	Brown	0.7	QM
242	053	Room 317	D	Wall	U	Ctr	I	Concrete	Green	0.0	QM
243	054	Room 318	D	Wall	U	Ctr	I	Concrete	Blue	-0.1	QM
244	054	Room 318	B	Wall	U	Ctr	I	Metal	Blue	-0.1	QM
245	054	Room 318	B	Shelf		Ctr	I	Metal	Tan	-0.1	QM
246	054	Room 318	B	UnitVent		Ctr	I	Metal	Brown	-0.1	QM
247	055	Room 319	D	Wall	U	Ctr	I	Concrete	White	-0.1	QM
248	055	Room 319	D	Wall	L	Ctr	I	Metal	White	0.2	QM
249	055	Room 319	D	Shelf		Ctr	I	Metal	Tan	0.0	QM
250	055	Room 319	D	UnitVent		Ctr	I	Metal	Brown	-0.1	QM
251	056	Room 321	B	Wall	U	Ctr	I	Concrete	Blue	0.0	QM
252	056	Room 321	D	Wall	U	Ctr	I	Metal	Blue	-0.1	QM
253	056	Room 321	D	Shelf		Ctr	I	Metal	Tan	0.1	QM
254	056	Room 321	D	UnitVent		Ctr	I	Metal	Brown	0.1	QM
255	057	Corridor304	D	UnitVent		Ctr	I	Metal	Brown	-0.1	QM
256	057	Corridor304	D	Wall	U	Ctr	I	Concrete	White	0.0	QM
257	057	Corridor304	D	CoveMldg		Ctr	I	Concrete	Brown	0.5	QM
258	058	MainOffice	D	Wall	U	Ctr	I	Concrete	Blue	0.0	QM
259	058	MainOffice	D	UnitVent		Ctr	I	Metal	Tan	0.3	QM
260	058	MainOffice	D	FinnedTube		Ctr	I	Metal	Tan	0.2	QM
261	058	MainOffice	D	CoveMldg		Ctr	I	Vinyl	Tan	-0.2	QM
262	058	MainOffice	D	Wall	U	Ctr	I	Metal	White	0.1	QM
263	058	MainOffice	A	Wall	U	Ctr	I	Drywall	Blue	0.0	QM
264	059	Principals	A	UnitVent		Ctr	I	Metal	Yellow	0.0	QM
265	059	Principals	A	FinnedTube		Ctr	I	Metal	Yellow	-0.1	QM
266	059	Principals	A	CoveMldg		Ctr	I	Vinyl	Black	0.1	QM
267	059	Principals	D	Wall	U	Ctr	I	Metal	Yellow	0.3	QM

SEQUENTIAL REPORT OF LEAD PAINT INSPECTION FOR: R. Gonzalez Consulting Inc.

Read No.	Rm No.	Room Name	Wall	Structure	Location	Member	Paint Cond	Substrate	Color	Lead (mg/cm²)	Mode
268	059	Principals	D	Wall	U Ctr		I	Concrete	Yellow	-0.2	QM
269	059	Principals	B	Wall	U Ctr		I	Drywall	Yellow	-0.1	QM
270	060	Room 237	D	Wall	U Ctr		I	Concrete	Blue	-0.3	QM
271	060	Room 237	D	Wall	U Ctr		I	Metal	White	0.0	QM
272	060	Room 237	D	UnitVent	Ctr		I	Metal	Tan	0.1	QM
273	060	Room 237	D	FinnedTube	Ctr		I	Metal	Tan	0.1	QM
274	060	Room 237	D	CoveMldg	Ctr		I	Vinyl	Brown	-0.4	QM
275	060	Room 237	D	Wall	U Ctr		I	Drywall	Blue	0.2	QM
276	061	Room 238	D	Wall	U Ctr		I	Concrete	Tan	-0.1	QM
277	061	Room 238	D	Wall	U Ctr		I	Metal	White	-0.2	QM
278	061	Room 238	D	FinnedTube	Ctr		I	Metal	Tan	0.1	QM
279	061	Room 238	D	UnitVent	Ctr		I	Metal	Tan	0.0	QM
280	061	Room 238	D	CoveMldg	Ctr		I	Vinyl	Brown	-0.4	QM
281	061	Room 238	C	Wall	U Ctr		I	Drywall	Tan	-0.2	QM
282	062	NurseOffice	D	Wall	U Ctr		I	Concrete	Blue	0.2	QM
283	062	NurseOffice	D	Wall	U Ctr		I	Metal	White	0.3	QM
284	062	NurseOffice	D	UnitVent	Ctr		I	Metal	Tan	0.0	QM
285	062	NurseOffice	D	CoveMldg	Ctr		I	Vinyl	Black	-0.1	QM
286	062	NurseOffice	A	Wall	U Ctr		I	Drywall	Blue	-0.1	QM
287	062	NurseOffice	D	Wall	U Ctr		I	Drywall	Blue	0.0	QM
288	063	Treatment1	D	Wall	U Ctr		I	Drywall	Blue	0.0	QM
289	064	Treatment2	D	Wall	U Ctr		I	Drywall	Blue	-0.1	QM
290	065	Treatment3	D	Wall	U Ctr		I	Drywall	Blue	0.0	QM
291	066	Room 228	D	Wall	U Ctr		I	Concrete	Blue	-0.3	QM
292	066	Room 228	B	Wall	U Ctr		I	Metal	White	-0.2	QM
293	066	Room 228	B	UnitVent	Ctr		I	Metal	Blue	0.0	QM
294	066	Room 228	B	Shelf	Ctr		I	Metal	Tan	0.0	QM
295	067	Room 226	D	Wall	U Ctr		I	Concrete	Yellow	-0.3	QM
296	067	Room 226	B	Wall	U Ctr		I	Metal	White	-0.2	QM
297	067	Room 226	B	Shelf	Ctr		I	Metal	Tan	0.0	QM
298	067	Room 226	B	UnitVent	Ctr		I	Metal	Black	0.0	QM
299	068	Room 224	D	Wall	U Ctr		I	Concrete	Yellow	-0.2	QM
300	068	Room 224	B	Wall	U Ctr		I	Metal	White	-0.1	QM
301	068	Room 224	B	Shelf	Ctr		I	Metal	Tan	0.0	QM
302	068	Room 224	B	UnitVent	Ctr		I	Metal	Black	-0.2	QM
303	069	Room 250	B	Wall	U Ctr		I	Concrete	Blue	-0.3	QM
304	069	Room 250	A	Wall	U Ctr		I	Concrete	White	-0.1	QM
305	069	Room 250	A	Window	Ctr	Lft casing	I	Metal	White	-0.1	QM
306	069	Room 250	A	Shelf	Ctr		I	Metal	Tan	-0.1	QM
307	069	Room 250	D	UnitVent	Ctr		I	Metal	Black	-0.1	QM
308	069	Room 250	D	ShelfBase	Ctr		I	Metal	Black	0.7	QM
309	069	Room 250	D	UnVntGrille	Ctr		I	Metal	White	-0.2	QM
310	069	Room 250	D	UnVntGrille	Ctr		I	Metal	Tan	-0.1	QM
311	070	Room 253	A	Wall	U Ctr		I	Concrete	Yellow	-0.1	QM
312	071	Room 255	A	Wall	U Ctr		I	Concrete	Blue	-0.2	QM
313	071	Room 255	C	Wall	U Ctr		I	Metal	Blue	-0.2	QM
314	071	Room 255	C	Shelf	Ctr		I	Metal	Tan	0.1	QM
315	071	Room 255	C	UnitVent	Ctr		I	Metal	Brown	-0.3	QM
316	071	Room 255	C	Shelf	Ctr		I	Metal	Tan	-0.6	QM
317	072	Room 201	C	Wall	U Ctr		I	Concrete	Yellow	-0.1	QM
318	072	Room 201	A	Wall	U Ctr		I	Metal	Yellow	-0.3	QM
319	072	Room 201	A	Shelf	Ctr		I	Metal	Tan	-0.1	QM
320	072	Room 201	A	UnitVent	Ctr		I	Metal	Brown	-0.3	QM
321	073	Hall	A	Wall	U Ctr		I	Concrete	Yellow	-0.1	QM
322	073	Hall	A	UnitVent	Ctr		I	Metal	Tan	-0.1	QM

SEQUENTIAL REPORT OF LEAD PAINT INSPECTION FOR: R. Gonzalez Consulting Inc.

Lead No.	Rm No.	Room Name	Wall	Structure	Location	Member	Paint Cond	Substrate	Color	Lead (mg/cm²)	Mode
323	073	Hall	A	CoveMldg	Ctr		I	Vinyl	Brown	0.0	QM
324	074	Room 205	B	Wall	U Ctr		I	Concrete	Blue	0.0	QM
325	074	Room 205	D	Window	Ctr	Lft casing	I	Metal	Blue	0.2	QM
326	074	Room 205	D	Shelf	Ctr		I	Metal	Tan	-0.1	QM
327	074	Room 205	D	UnitVent	Ctr		I	Metal	Brown	-0.2	QM
328	075	Room 207	B	Wall	U Ctr		I	Concrete	Yellow	0.0	QM
329	075	Room 207	D	Wall	U Ctr		I	Metal	Yellow	-0.3	QM
330	075	Room 207	D	Shelf	Ctr		I	Metal	Tan	-0.1	QM
331	075	Room 207	D	UnitVent	Ctr		I	Metal	Brown	-0.1	QM
332	076	Room 406	B	Wall	U Ctr		I	Drywall	Yellow	-0.1	QM
333	076	Room 406	B	UnitVent	Ctr		I	Metal	Tan	-0.1	QM
334	077	Room 407	B	Wall	U Ctr		I	Drywall	Yellow	-0.1	QM
335	077	Room 407	D	Wall	U Ctr		I	Metal	Tan	-0.1	QM
336	078	Room 401	D	Wall	U Ctr		I	Drywall	Yellow	-0.1	QM
337	078	Room 401	A	Wall	U Ctr		I	Metal	Tan	-0.1	QM
338	079	Room 402	D	Wall	U Ctr		I	Drywall	Yellow	-0.4	QM
339	079	Room 402	D	UnitVent	Ctr		I	Metal	Tan	-0.1	QM
340	080	Corridor208	A	UnitVent	Ctr		I	Metal	Tan	-0.1	QM
341	080	Corridor208	B	Wall	U Ctr		I	Concrete	White	0.0	QM
342	080	Corridor208	B	CoveMldg	Ctr		I	Vinyl	Brown	-0.2	QM
343	081	Room 210	D	Wall	U Ctr		I	Concrete	Blue	-0.3	QM
344	081	Room 210	B	Wall	U Ctr		I	Metal	Blue	-0.1	QM
345	081	Room 210	B	Shelf	Ctr		I	Metal	Tan	-0.2	QM
346	081	Room 210	B	UnitVent	Ctr		I	Metal	Brown	-0.2	QM
347	082	Room 212	D	Wall	U Ctr		I	Concrete	Blue	-0.1	QM
348	082	Room 212	B	Window	Ctr	Lft casing	I	Metal	Blue	0.1	QM
349	082	Room 212	B	Deck	Ctr		I	Metal	Gray	0.0	QM
350	082	Room 212	B	StructSteel	Ctr		I	Metal	Orange	-0.2	QM
351	083	Room 215	C	Wall	U Ctr		I	Concrete	Blue	-0.2	QM
352	083	Room 215	A	Wall	U Ctr		I	Metal	Blue	-0.2	QM
353	083	Room 215	A	UnitVent	Ctr		I	Metal	Brown	-0.1	QM
354	083	Room 215	A	Shelf	Ctr		I	Metal	Tan	-0.2	QM
355	084	Room 217	B	Wall	U Ctr		I	Concrete	Yellow	-0.4	QM
356	084	Room 217	A	Wall	U Ctr		I	Metal	Yellow	-0.3	QM
357	084	Room 217	A	Shelf	Ctr		I	Metal	Tan	0.0	QM
358	084	Room 217	A	UnitVent	Ctr		I	Metal	Brown	-0.1	QM
359	085	Hall	C	Wall	U Ctr		I	Concrete	Yellow	-0.2	QM
360	085	Hall	C	UnitVent	Ctr		I	Metal	Tan	-0.1	QM
361	085	Hall	C	CoveMldg	Ctr		I	Vinyl	Black	0.1	QM
362	086	Room 219	A	Wall	U Ctr		I	Concrete	Yellow	0.0	QM
363	086	Room 219	C	Wall	U Ctr		I	Metal	Yellow	-0.1	QM
364	086	Room 219	C	Shelf	Ctr		I	Metal	Tan	0.0	QM
365	086	Room 219	C	UnitVent	Ctr		I	Metal	Brown	-0.1	QM
366	087	Room 221	A	Wall	U Ctr		I	Concrete	Blue	-0.3	QM
367	087	Room 221	C	Wall	U Ctr		I	Metal	Blue	-0.2	QM
368	087	Room 221	C	Shelf	Ctr		I	Metal	Tan	0.1	QM
369	087	Room 221	C	ShelfBase	Ctr		I	Metal	Blue	0.6	QM
370	087	Room 221	C	UnitVent	Ctr		I	Metal	Black	-0.3	QM
371	087	Room 221	C	UnVntGrille	Ctr		I	Metal	Tan	0.2	QM
372	087	Room 221	C	ShelfTop	Ctr		I	Metal	Tan	-0.1	QM
373	087	Room 221	C	Tile	Ctr		I	Vinyl	Tan	-0.3	QM
374	088	LadiesBath	C	Door	Ctr	U Ctr	I	Wood	Brown	-0.4	QM
375	088	LadiesBath	C	Door	Ctr	Lft casing	I	Metal	Brown	1.0	QM
376	088	LadiesBath	C	Door	Ctr	Lft jamb	I	Metal	Brown	2.3	QM
377	088	LadiesBath	A	Wall	U Ctr		I	Vinyl	Brown	-0.7	QM

SEQUENTIAL REPORT OF LEAD PAINT INSPECTION FOR: R. Gonzalez Consulting Inc.

Read No.	Rm No.	Room Name	Wall	Structure	Location	Member	Paint Cond	Substrate	Color	Lead (mg/cm²)	Mode
378	088	LadiesBath	B	Wall	U Ctr		I	Vinyl	Brown	-0.4	QM
379	088	LadiesBath	C	Wall	U Ctr		I	Vinyl	Brown	-0.1	QM
380	088	LadiesBath	D	Wall	U Ctr		I	Vinyl	Brown	-0.3	QM
381	088	LadiesBath	D	CoveMldg	Ctr		I	Vinyl	Brown	-0.3	QM
382	088	LadiesBath	B	Floor			I	Vinyl	Brown	-0.1	QM
383	088	LadiesBath	B	Sink	Ctr		I	Ceramic	White	-0.5	QM
384	088	LadiesBath	B	Toilet	Ctr		I	Ceramic	White	-0.1	QM
385	089	MenBathRm	D	Ceiling			I	MinWool	White	0.0	QM
386	089	MenBathRm	D	Door	Ctr	U Ctr	I	Wood	Brown	-0.1	QM
387	089	MenBathRm	D	Door	Ctr	Lft casing	I	Metal	Brown	1.6	QM
388	089	MenBathRm	D	Door	Ctr	Lft jamb	I	Metal	Brown	3.1	QM
389	089	MenBathRm	A	Wall	U Ctr		I	Vinyl	Brown	-0.6	QM
390	089	MenBathRm	B	Wall	U Ctr		I	Vinyl	Brown	-0.6	QM
391	089	MenBathRm	C	Wall	U Ctr		I	Vinyl	Brown	-0.4	QM
392	089	MenBathRm	D	Wall	U Ctr		I	Vinyl	Brown	-0.4	QM
393	089	MenBathRm	D	CoveMldg	Ctr		I	Vinyl	Brown	-0.2	QM
394	089	MenBathRm	B	Floor			I	Vinyl	Brown	-0.1	QM
395	089	MenBathRm	B	Sink	Ctr		I	Ceramic	White	-0.4	QM
396	089	MenBathRm	B	Toilet	Ctr		I	Ceramic	White	0.2	QM
397	089	MenBathRm	D	Ceiling			I	MinWool	White	0.0	QM
398	090	NurseStorag	A	Wall	U Ctr		I	Concrete	Yellow	-0.1	QM
399	090	NurseStorag	B	Wall	U Ctr		I	Concrete	Yellow	-0.2	QM
400	090	NurseStorag	C	Wall	U Ctr		I	Drywall	Yellow	0.0	QM
401	090	NurseStorag	D	Wall	U Ctr		I	Drywall	Yellow	0.0	QM
402	090	NurseStorag	D	Shelf	Ctr		I	Wood	White	1.0	QM
403	090	NurseStorag	D	CoveMldg	Ctr		I	Vinyl	Brown	-0.3	QM
404	091	NurseOffBth	A	Wall	U Ctr		I	WallBoard	White	0.0	QM
405	091	NurseOffBth	B	Wall	U Ctr		I	WallBoard	White	-0.3	QM
406	091	NurseOffBth	C	Wall	U Ctr		I	WallBoard	White	-0.2	QM
407	091	NurseOffBth	D	Wall	U Ctr		I	WallBoard	White	-0.5	QM
408	091	NurseOffBth	D	Sink	Ctr		I	Ceramic	White	-0.5	QM
409	091	NurseOffBth	D	Toilet	Ctr		I	Ceramic	White	-0.5	QM
410	091	NurseOffBth	D	CoveMldg	Ctr		I	Vinyl	Brown	-0.1	QM
411	091	NurseOffBth	D	Door	Ctr	U Ctr	I	Vinyl	Brown	-0.1	QM
412	091	NurseOffBth	D	Door	Ctr	Lft casing	I	Vinyl	Brown	0.0	QM
413	091	NurseOffBth	D	Door	Ctr	Lft jamb	I	Vinyl	Brown	-0.2	QM
414	092	NurseStorag	D	Door	Ctr	U Ctr	I	Wood	Brown	0.0	QM
415	092	NurseStorag	D	Door	Ctr	Lft casing	I	Metal	Brown	2.0	QM
416	092	NurseStorag	D	Door	Ctr	Lft jamb	I	Metal	Brown	2.5	QM
417	093	MenRm115	D	Sink	Ctr		I	Ceramic	White	-0.5	QM
418	093	MenRm115	D	Toilet	Ctr		I	Ceramic	White	-0.4	QM
419	093	MenRm115	D	Urinal	Ctr		I	Ceramic	White	-0.3	QM
420	094	WomemRm115	D	Sink	Ctr		I	Ceramic	White	-0.5	QM
421	094	WomemRm115	D	Toilet	Ctr		I	Ceramic	White	-0.1	QM
422	001	Laundry	D	Wall	U Ctr		I	Brick	Brown	0.1	QM
423	002	Cafe	D	Wall	U Ctr		I	Metal	Blue	4.6	QM
424	002	Cafe	D	Wall	L Ctr		I	Metal	Blue	4.9	QM
425	003	MainOffice	D	Wall	U Ctr		I	Metal	Blue	5.8	QM
426	004	Room 250	D	Louver	Ctr		I	Metal	Blue	4.4	QM
427	005	Room 207	D	Louver	Ctr		I	Metal	Blue	4.2	QM
428	005	Room 207	D	Wall	U Ctr		I	Metal	Blue	5.7	QM
429	006	Room 406	D	Window	Ctr	Sill	I	Metal	Brown	-0.3	QM
430	006	Room 406	D	Window	Ctr	Lft casing	I	Metal	Brown	-0.3	QM
431	007	Room 303	D	Louver	Ctr		I	Metal	Brown	4.0	QM
432	007	Room 303	D	Wall	U Ctr		I	Metal	Brown	6.3	QM

SEQUENTIAL REPORT OF LEAD PAINT INSPECTION FOR: R. Gonzalez Consulting Inc.

Lead No.	Rm No.	Room Name	Wall	Structure	Location	Member	Paint Cond	Substrate	Color	Lead (mg/cm²)	Mode
433	008	Room 318	B	Louver		Ctr	I	Metal	Blue	4.6	QM
434	008	Room 318	B	Wall	U	Ctr	I	Metal	Blue	6.2	QM
435	009	Room 320	B	Soffit		Ctr	I	Metal	White	-0.1	QM
436	010	Room 116	B	Soffit		Ctr	I	Metal	White	-0.1	QM
437	011	BoilerRmSL	B	SkyLight		Ctr	I	Metal	Gray	-0.2	QM
438	012	MensRoom	B	SkyLight		Ctr	I	Metal	Gray	0.2	QM
439	013	BoysRoom	B	SkyLight		Ctr	I	Metal	Gray	-0.5	QM
440	014	Bath 402	B	SkyLight		Ctr	I	Metal	Gray	0.0	QM
441	015	Room 255	B	Soffit		Ctr	I	Metal	White	0.2	QM
442	016	MainOffice	B	Soffit		Ctr	I	Metal	White	0.1	QM
443		CALIBRATION								2.1	QM
444		CALIBRATION								1.9	QM
445		CALIBRATION								2.0	QM
446		CALIBRATION								0.3	QM
447		CALIBRATION								0.1	QM
448		CALIBRATION								0.2	QM

---- End of Readings ----

APPENDIX C

LABORATORY REPORT FOR PAINT ANALYSIS

APPENDIX C

LABORATORY REPORT FOR PAINT ANALYSIS

The U.S. Department of Housing and Urban Development (HUD) requires a paint chip sample to be taken by an Environmental Protection Agency (EPA) certified Lead Inspector/Risk assessor if the XRF analyzer registers data on metal or plaster substrates in the inconclusive range. (see page 3 of this report for specific inconclusive ranges)

The paint chip sample must be submitted to a NYSDOH ELAP, NVLAP laboratory for analysis. Paint is considered to be lead-based if the concentration of lead is equal or greater than 0.5% by weight.

The inspection at Owego North Elementary, Owego, New York did register readings in the inconclusive range. XRF shot 51 was taken in the cafeteria on the blue metal window casing. This shot registered inconclusive. Two other shots were taken on this substrate and returned negative for lead-based paint. The blue metal window casing should not be considered lead-based in the cafeteria.

XRF shot 375 was taken in the ladies bathroom in the main office. This shot also registered inconclusive. Several shots of similar door casings/door jambs have returned positive for lead-based paint, including the men's bathroom door casing/jamb adjacent to the women's bathroom. It can be concluded the women's door casing has the same painting history as the other door casings in this area. Therefore, the women's doorframe should be treated as lead-based paint.

APPENDIX D

DRAWINGS

APPENDIX D

DRAWINGS

environmental consultants, inc.
57 AMBROSE STREET
ROCHESTER, NEW YORK 14618
585-454-3060 FAX 585-454-3062

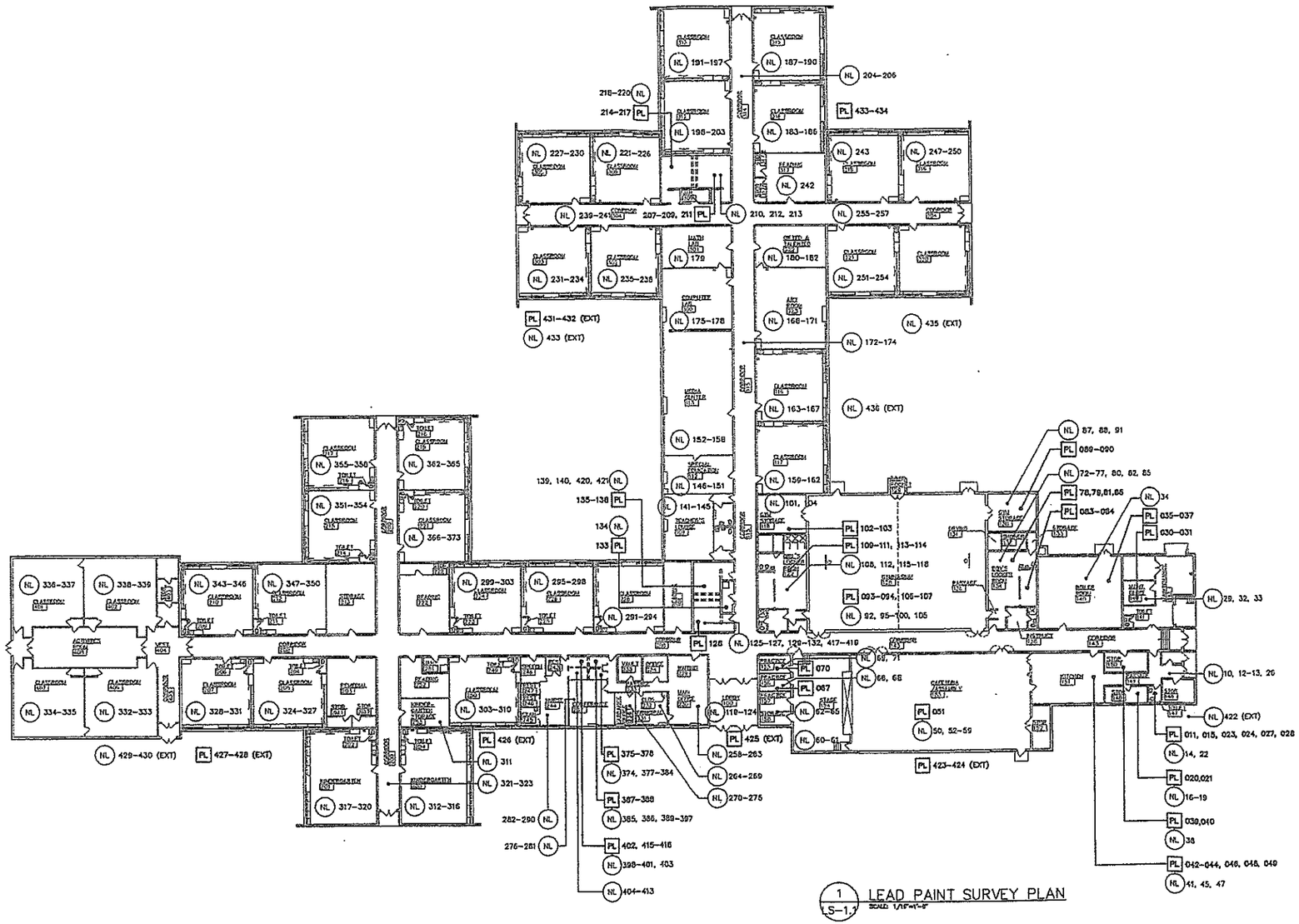

1 LS-1.1 LEAD PAINT SURVEY PLAN
SCALE: 1/16"=1'-0"

LEAD SURVEY KEY

PL POSITIVE LEAD LOCATION

NL NEGATIVE LEAD LOCATION

NOTE: REFER TO THE ANALYTICAL REPORTS FOR ADDITIONAL INFORMATION.

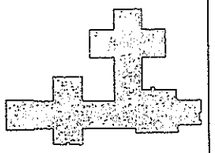

KEY PLAN

OWEGO NORTH ELEMENTARY
SED CONTROL NUMBER
60-06-01-06-0-007-009

PROJECT TITLE:

Owego–Apalachin Central School District

Excel Project
Owego, New York

SCALE:

DRAWING TITLE:

LEAD PAINT SURVEY SAMPLE LOCATIONS

DRAWN BY:	CHECKED BY:
AJL	CPL
DATE: 06/25/06	PROJECT NO: 2007-310p

DRAWING NO:

LS-1.1

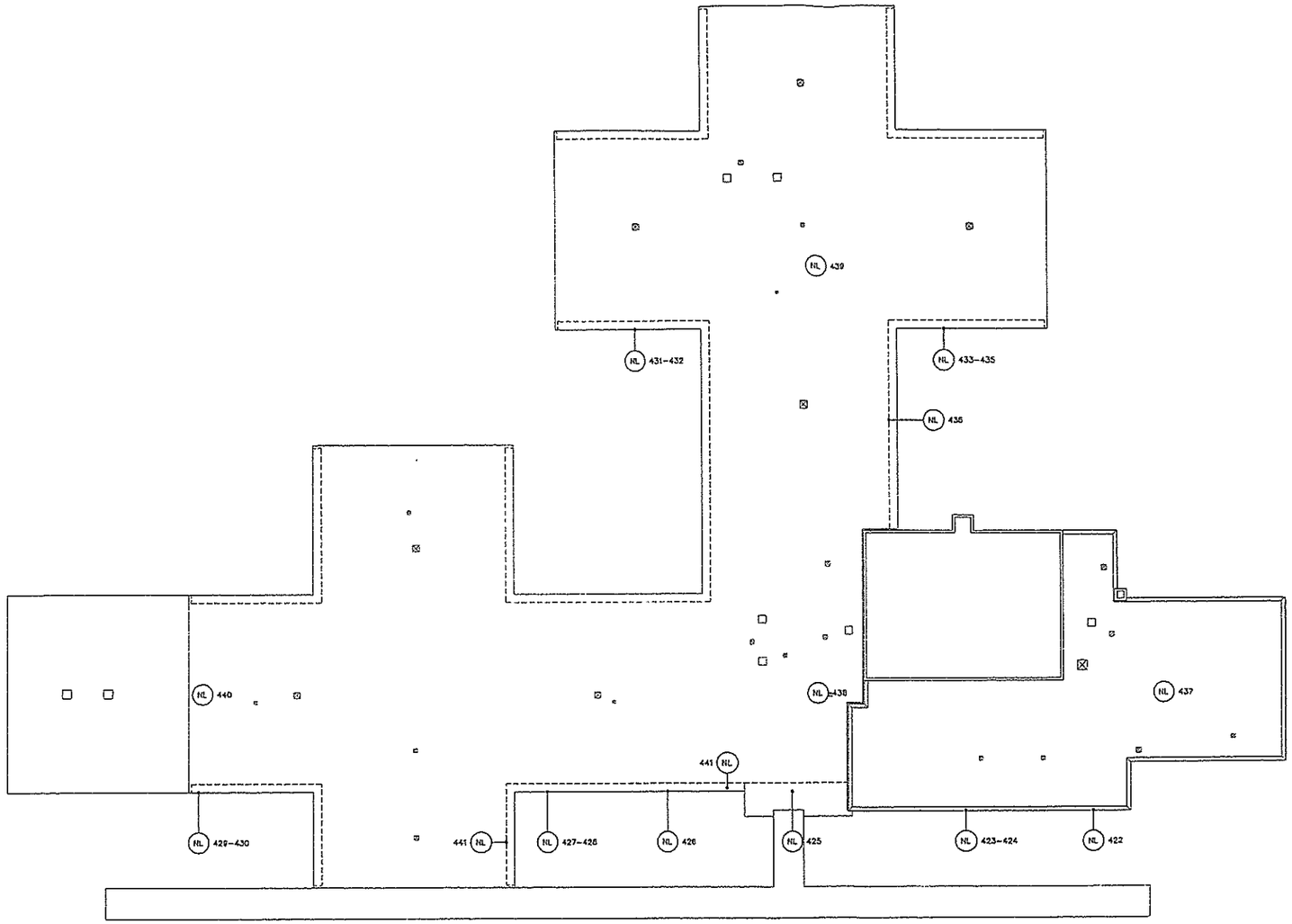

1 LS-1.2 LEAD PAINT SURVEY ROOF PLAN
SCALE: 1/16"=1'-0"

ENVOY
environmental consultants, inc.
37 AMBROSE STREET
ROCHESTER, NEW YORK 14614
585-454-1060 FAX 585-454-1062

LEAD SURVEY KEY

PL POSITIVE LEAD LOCATION

NL NEGATIVE LEAD LOCATION

NOTE: REFER TO THE ANALYTICAL REPORTS FOR ADDITIONAL INFORMATION.

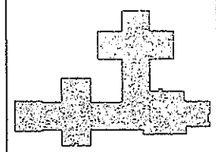

KEY PLAN

OWEGO NORTH ELEMENTARY
SED CONTROL NUMBER
60-06-01-06-0-007-009

PROJECT TITLE:

Owego-Apalachin Central School District

Excel Project
Owego, New York

SCALE:

DRAWING TITLE:

LEAD PAINT SURVEY LOCATIONS ROOF PLAN

DRAWN BY:	CHECKED BY:
AJL	CPL
DATE:	PROJECT NO:
08/25/08	2007-340p

DRAWING NO:

LS-1.2

APPENDIX E

COMPONENT IDENTIFICATION SHEETS

EXTERIOR ..... (OR)

ROOM # .....

WALL (A) (B) (C) (D)

LEFT ◯

RIGHT ◯

CENTER ◯

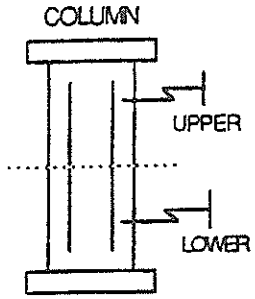

EXTERIOR ..... (OR)

ROOM # .....

WALL (A) (B) (C) (D)

LEFT ◯

RIGHT ◯

CENTER ◯

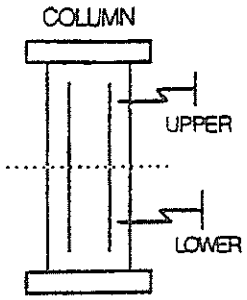

EXTERIOR ..... (OR)

ROOM # .....

WALL (A) (B) (C) (D)

LEFT ◯

RIGHT ◯

CENTER ◯

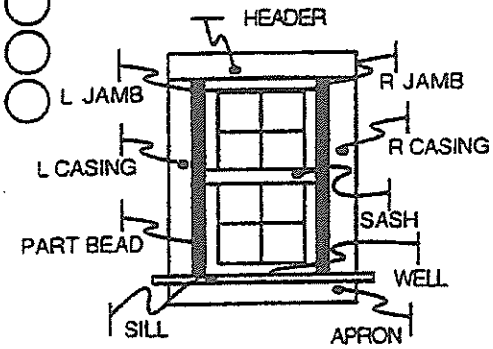

EXTERIOR ..... (OR)

ROOM # .....

WALL (A) (B) (C) (D)

LEFT ◯

RIGHT ◯

CENTER ◯

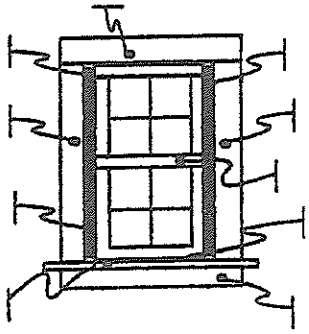

EXTERIOR ..... (OR)

ROOM # .....

WALL (A) (B) (C) (D)

LEFT ◯

RIGHT ◯

CENTER ◯

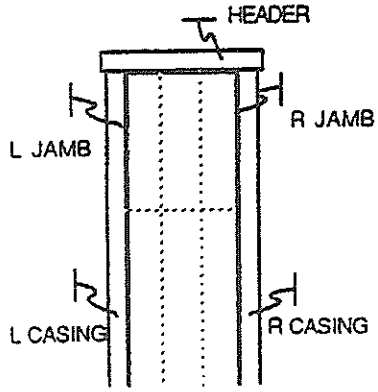

EXTERIOR ..... (OR)

ROOM # .....

WALL (A) (B) (C) (D)

LEFT ◯

RIGHT ◯

CENTER ◯

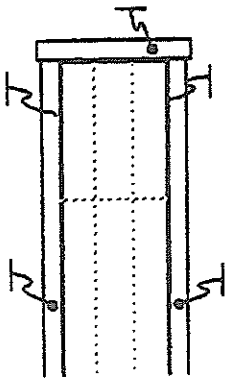

EXTERIOR ..... (OR)

ROOM # .....

WALL (A) (B) (C) (D)

LEFT ◯

RIGHT ◯

ENTER ◯

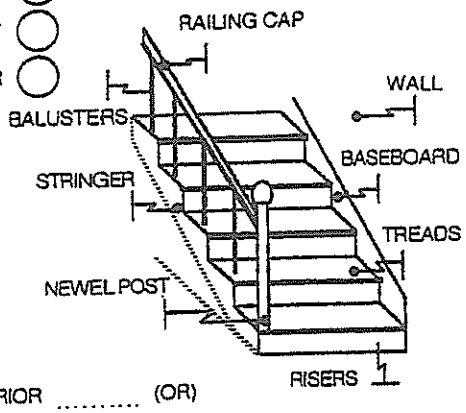

EXTERIOR ..... (OR)

ROOM # .....

WALL (A) (B) (C) (D)

LEFT ◯

RIGHT ◯

ENTER ◯

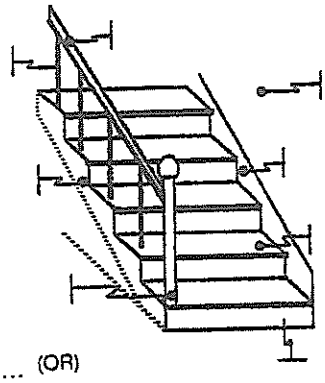

XTERIOR ..... (OR)

OOM # .....

VALL (A) (B) (C) (D)

LEFT ◯

IGHT ◯

NTER ◯

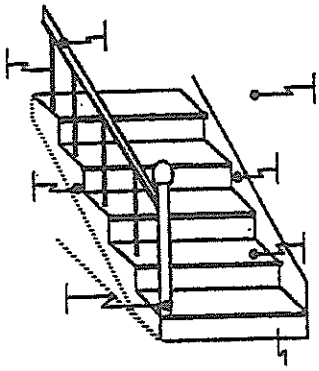

EXTERIOR ..... (OR)

ROOM # .....

WALL (A) (B) (C) (D)

LEFT ◯

RIGHT ◯

CENTER ◯

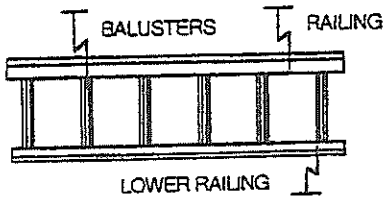

EXTERIOR ..... (OR)

ROOM # .....

WALL (A) (B) (C) (D)

LEFT ◯

RIGHT ◯

CENTER ◯

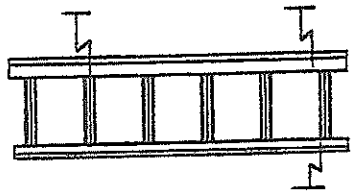

EXTERIOR ..... (OR)

ROOM # .....

WALL (A) (B) (C) (D)

LEFT ◯

RIGHT ◯

CENTER ◯

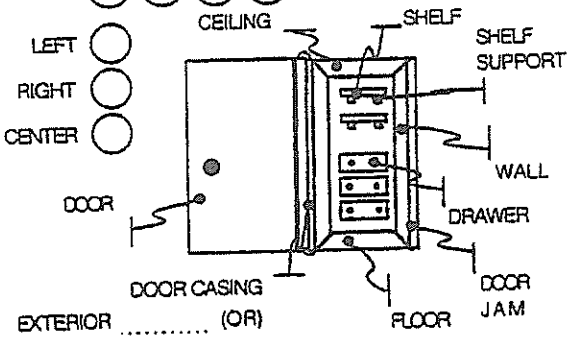

EXTERIOR ..... (OR)

ROOM # .....

WALL (A) (B) (C) (D)

LEFT ◯

RIGHT ◯

CENTER ◯

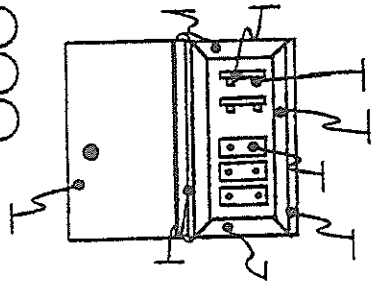

APPENDIX F

CERTIFICATIONS

NEW YORK STATE

DRIVER LICENSE

ID: 949 730 819 CLASS D

BIJAK GEOFFREY R

DOB: 05-23-77
SEX: M EYES: BRN HT: 6-03
E NONE
R B
ISSUED: 11-03-06 EXPIRES: 05-23-11 77026621

RESPIRATOR FIT TEST

[redacted]

STATE OF NEW YORK - DEPARTMENT OF LABOR
ASBESTOS CERTIFICATE

GEOFFREY R BIJAK
CLASS (EXPIRES)
D INSP (05/09) H RM (05/09)
I PLAN (05/09)

DEPARTMENT OF LABOR

CERT# 02-12564
DMV# 949730819
MUST BE CARRIED ON ASBESTOS PROJECTS

New York
RISK ASSESSOR

OSHA 00075523

U.S. Department of Labor
Occupational Safety and Health Administration

Geoff Bijak

has successfully completed a 10-hour Occupational Safety and Health Training Course in

Construction Safety & Health

Trainer

5/25
Date

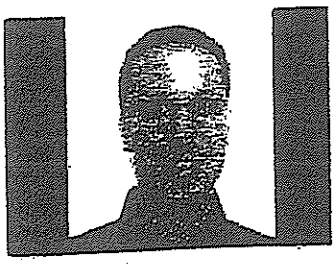

Certified Lead-Based
Paint Professional

Certification No NY-R-18527-1
Expiration Date 04/28/2011
Date of Birth 06/23/1977
Address [redacted]
Badge Holder's Name Geoffrey R. Bijak
Badge Holder's Signature

If found, drop in any mailbox
Postmaster: Please return to
US EPA
1200 Pennsylvania Ave, NW
(MC-7408T)
Washington, DC 20460
or call 1-800-424-LEAD

Medical Surveillance - Asbestos

Patient: Bak, Scott R
SSN: [redacted]631
DOB: 10/27/[redacted]
Gender: [illegible]
Marital Status: [illegible]
Address: [redacted]
[redacted]
Phone: [redacted]
Phone: Ext.

Job Title:
Employer: Envoy Environmental Services
Address: 145 Lake Ave
ROCHESTER, NY 14608
Job Contact: Shawn House
Role: Primary Contact
Phone: (585) 454-1080 Ext.
Fax: (585) 454-1092

Race: ASIAN BLACK HISPANIC NOAH WHITE OTHER

[illegible]

Signature

Date

Page [illegible]

Revision Date: [illegible]

EMPLOYER AUTHORIZATION AND INFORMATION FOR RESPIRATORY EVALUATION

EMPLOYER TO COMPLETE THE FOLLOWING

Employee Name: Bak, Scott R

Employer: Envoy Environmental Services

Check Type of Respirator(s) To Be Fitted (Check ALL that apply)

Employee Site: [redacted]631

Check Type of Usage (Check ALL that apply)

Check Type of Respirators Currently Used (Check ALL that apply)

Check Type of Respirators Currently (Check ALL that apply)

Check ALL That Apply After Wearing Respirator

Check ALL that apply

Evaluation Authorization By

DO NOT WRITE BELOW THIS LINE

DO NOT WRITE BELOW THIS LINE

PLHCP WRITTEN STATEMENT OF RESPIRATORS (EMPLOYER)

PHYSICIAN WILL COMPLETE THE FOLLOWING

Concentra Medical Centers (NY)

Check ALL that apply

Concentra Medical Centers (NY)

Physician's Signature

Physician's Name Printed

Date of Exam

Expires On

Physician's License Number Obtained in West States

Page [illegible]

Revision Date: 5/23/2007

15-[illegible] Service Date: 5/23/2007

Date Taken: 5/23/2007

Service ID: 269004243

Chart Number:

Concentra Medical Centers (NY)

Non-Injury Flowsheet

Patient: Bak, Scott R
SSN: [redacted]631
Age: [illegible] DOB: 10/27/[illegible]
Address: [redacted]
Home: Ext.
Work: Work Ext.

Employer: Envoy Environmental Services
Employer Location: Envoy Environmental Services
Address: 145 Lake Ave
ROCHESTER, NY 14608

Contact: Shawn House
Phone: (585) 454-1080 Ext.
Role: Primary Contact
Phone: (585) 454-1080 Ext.
Fax: (585) 454-1092

Examination Results
- No Status Required
- Recommend Further Evaluation

Medical Evaluation Results
- Medical Evaluation Within Normal Limits
- Medical Evaluation NOT Within Normal Limits
- Not Applicable

Medical Restrictions
- Medical Restrictions
- No Medical Restrictions

Pending Results
- Pending Results
- Pending Medical Hold
- Pending Medical Records
- Pending Process Completion
- No Pending

Remarks:

Medical Implications
- Cardiovascular
- Diabetes
- Hypertension
- Medications
- Myocardial Infarction
- Physical Impairment
- Other (Comments Required)
- Seizures
- Vision
- Unverified Medical Information
- Unresolved Medical Hold
- Certification Expiration Date

Medical Comments Required

Page [illegible]

Revision Date: 5/23/2007

United States Environmental Protection Agency

This is to certify that

Envoy Environmental Consultants, Inc.

145 Lake Avenue, Rochester, New York 14608

has fulfilled the requirements of the Toxic Substances Control Act (TSCA) Section 402(a)(1), and has received certification to conduct lead-based paint activities pursuant to 40 CFR Part 745.226.

In the Jurisdiction of:

New York

This certification is valid from the date of issuance and expires March 30, 2009

NY-2017-1

Certification #

MAR 15 2006

Issued On

Kenneth S. Stoller, P.E., QEP, DEE, Chief

Pesticides & Toxic Substances Branch

RENOVATION
ASBESTOS SURVEY

at

Owego North Elementary School
1 Christa McAuliffe Lane
Owego, New York

Prepared for:

R. Gonzalez Consulting, Inc.
8 Lakewood Drive
Orchard Park, New York 14127

July 28 - August 1, 2008

Report Prepared By:
Envoy Environmental Consultants, Inc.
145 Lake Avenue, Rochester, New York 14608 (585) 454-1060

OWEGO NORTH ELEMENTARY SCHOOL
1 CHRISTA MCAULIFFE LANE
OWEGO, NEW YORK

TABLE OF CONTENTS

INTRODUCTION

LIMITATIONS

CONCLUSIONS

SPACE BY SPACE SUMMARY

DRAWINGS

LABORATORY REPORTS

CHAINS OF CUSTODY

CERTIFICATIONS

** This asbestos survey is a multi-page document which must be viewed in its entirety; see limitations.

INTRODUCTION

Envoy Environmental Consultants, Inc. was retained by **R. Gonzalez Consulting, Inc.** on July 28 – August 1, 2008 to conduct a limited renovation asbestos inspection for the detection of asbestos containing materials at **Owego North Elementary School, 1 Christa McAuliffe Lane, Owego, New York.**

Envoy Environmental Consultants, Inc. performed all field services and report generation for this project. Envoy's inspectors Shennendoah Elkin (AH # 00-20233) and Michael Nowakowski (AH # 06-11096) conducted this inspection with procedures and guidelines commonly used and accepted in New York State. The objective of this inspection was to identify the approximate locations and quantities of asbestos containing materials present at the above-referenced location. Generally, if a building material within a structure could contain asbestos the material was included in the survey. Laboratory analysis was performed by Paradigm Environmental Services, Inc. as a subcontractor to Envoy.

Samples were collected from locations within each homogeneous sampling area. Samples consist of a small amount of the subject material. Sampling points were recorded and cross-referenced to prepared sketches. Individual samples were also recorded on a chain of custody document. Samples were then transported to the Paradigm analytical laboratory for asbestos analysis.

The Paradigm laboratory is accredited through NYSDOH/ELAP (Lab ID# 10958) for Solid and Hazardous Waste and Air and Emissions for Bulk Asbestos Fiber Analysis. The chain of custody record accompanies all samples from the point collected until they reach the laboratory. Samples are stored at the laboratory for 90 days then disposed of according to authoritative regulations.

The analysis methodology used is as follows:

Asbestos Bulk Samples:

New York State Department of Health, ELAP Method 198.1 and 198.6 ("Polarized Light Microscopy Methods for Identifying and Quantitating Asbestos in Bulk Samples and in Non-Friable Organically Bound Bulk Samples.").
New York State Department of Health, ELAP Method 198.4 ("Transmission Electron Microscope Method for Identifying and Quantitating Asbestos in Non-Friable Organically Bound Bulk Samples").

** This asbestos survey is a multi-page document which must be viewed in its entirety; see limitations.

LIMITATIONS

The information provided in this report was compiled from field and laboratory data and was prepared for **R. Gonzalez Consulting, Inc.** in reference to **Owego North Elementary School, 1 Christa McAuliffe Lane, Owego, New York.** Observations noted and recorded are intended to represent the conditions that existed at the subject site at the time and date that the observations were made. **This survey was limited to materials expected to be impacted by the proposed renovation as denoted by Highland Associates' drawing dated June 27, 2008. Additionally, roof sampling was not performed based on the notarized letter (see attached) submitted to the inspectors from Diamond Roofing Company, Inc. stating that non-asbestos containing roofing materials was used during the 2002 roof replacement project.**

Determinations of suspect asbestos containing materials within the building were subject to the accessibility of individual areas or spaces. Envoy Environmental Consultants, Inc. accepts no responsibility for the content of building materials within areas or spaces that were unknown to us or not reasonably accessible to Envoy field personnel. Envoy assumes no liability for any buildings that were not identified by the client that may fall under state or federal regulations. Conclusions and recommendations provided in this report are based on the assumption that materials identified are homogeneous throughout their application.

This asbestos survey report is not intended to be a bid document for a scope of work for the asbestos abatement contractor. The survey report only identifies and assesses the location, quantity and condition of ACM, PACM or asbestos materials at the subject site. The asbestos survey report is intended to be used as a tool in the development of an asbestos abatement project design or work scope. Under the Code Rule regulation this task can only be performed by a Certified Project Designer.

Energized mechanical or electrical systems were not sampled as part of the survey, and were visually assessed as ACM (Asbestos Containing Material). Suspect materials that are visually assessed by the inspector as ACM shall be treated as ACM, unless bulk sampling is conducted consistent with EPA and OSHA accepted methods, and the analysis meets the requirements of Code Rule 56 and the suspect material is found not to be asbestos containing. These systems may contain one or more of the following components, but are not limited to these components: brakes, clutches, gaskets, insulating panels, blocks or backer boards, wire insulation, electrical panel boxes, bus ducts, explosion proof lighting gaskets and fitting packings, insulating papers, pipe sleeve packings, fire stops, caulks, paints and coatings.

** This asbestos survey is a multi-page document which must be viewed in its entirety; see limitations.

CONCLUSIONS

Envoy Environmental Consultants, Inc. was retained to perform a limited renovation asbestos survey at **Owego North Elementary School, 1 Christa McAuliffe Lane, Owego, New York** on July 28 – August 1, 2008. A New York State certified inspector sampled materials from the above mentioned location. Sample locations and custody information were recorded and the samples were transported to the Paradigm laboratory for analysis.

The following is a brief description of the space by space survey.

Col. 1	*Col. 2*	*Col. 3*	*Col. 4*	*Col. 5*	*Col. 6*	*Col. 7*	*Col. 8*	*Col 9*	*Col 10*
Room #	*Sample #'s taken in Room*	*Positive Sample ID #*	*Positive Material Description*	*Location of Material*	*Condition*	*Friable Non-Friable NOB*	*SQ FT*	*Lin FT*	*Units*

1. Column 1: indicates the Room number, room description and estimated square footage of the room referenced to the attached map/drawing.
2. Column 2: indicates the bulk sample numbers that were taken in the Room indicated in column 1. i.e. 001-007 means samples one through seven were sampled in the room, none would indicate that no samples were taken in the room. You will not see the first three letters of the sample in this column. If you would like to know the materials that were tested in the room please refer to the analytical results which are documented in numerical order.
3. Column 3: indicates the sample number that proves the material is positive for asbestos content. This sample may have taken in the space in column 1 or determined a homogeneous area (material) by the inspector to a sample that was taken in another space. For the purpose of this report all samples are assigned a six digit alphanumeric sample identification number. The first three letters/numbers indicate the material, found in column 4. The last three numbers indicate the sample number in the sequence in which they were taken. If there is a letter after the last three numbers, this indicates that the laboratory or the inspector determines that there were multiple layers within the sample, requiring additional sampling under EPA protocols.
4. Column 4: gives a brief description of the asbestos containing material or the material that is to be treated as asbestos containing as determined by the inspector. At times non-asbestos materials are contaminated with asbestos, therefore must be treated as asbestos.
5. Column 5: indicates a brief description of the location of the material in the room and not the location where the sample was taken from. You will find locations of where each sample was taken from on the analytical sampling results.
6. Column 6: indicates the physical condition of the material as assessed by the inspector in the space indicated in column 1, according to the condition description described below. For the purpose of this report, the condition of the ACM will be reported in good, fair or poor condition. Conditions will be listed in column 6 of the survey report will be as follows;
   a. ***Good:*** means material is intact with no visible damage.
   b. ***Fair:*** means material contains fewer than 10% distributed damage or 25% localized damage.
   c. ***Poor:*** means material contains over 10% distributed damage or 25% localized damage.
   Conditions listed in column 6 of the space by space survey report are only related to the specific material for the specific space.
7. Column 7: indicates the friability of the material in that space as determined by the inspector and the analytical laboratory consistent with Code Rule 56 and EPA regulations.
8. Column 8: indicates the square footage of ACM material found in the space.
9. Column 9: indicates the linear footage of ACM material found in the space. Pipe insulation that is two feet or greater in diameter is required to be reported in square feet according to code Rule 56.
10. Column 10: indicates the units of ACM material found in the space.

** This asbestos survey is a multi-page document which must be viewed in its entirety; see limitations.

Space by Space Summary for Renovation Asbestos Survey at Owego North Elementary School, 1 Christa McAuliffe Lane, Owego, New York

Room #	Sample #'s taken in space	Positive Sample ID #	Positive Material Description	Location of Material	Friable Non-Friable NOB	Condition	SQ FT	Lin. FT	Units
Hallway Outside Room 321	10C, 15	None	No Asbestos Detected				0	0	0
Room 323	14B	None	No Asbestos Detected				0	0	0
Teachers Lounge	14A	None	No Asbestos Detected				0	0	0
Hallway Outside Boys' & Girls' Bathrooms	04C, 05C, 09B	None	No Asbestos Detected				0	0	0
Girls' Bathroom	11B, 12B, 13B	None	No Asbestos Detected				0	0	0
Boys' Bathroom	11A, 12A, 13A	None	No Asbestos Detected				0	0	0
Girls' Locker Room	06C, 10B	DOC-01A	Gray Door Caulk	Door Frames	NOB	Fair		160	
Boys' Locker Room and Storage	04B, 05B, 06B, 07B	DOC-01A	Gray Door Caulk	Door Frames	NOB	Fair		160	
Cafeteria	16A, 16B	DOC-01A	Gray Door Caulk	Door Frames	NOB	Fair		180	
Kitchen	01B	DOC-01A	Gray Door Caulk	Door Frames	NOB	Fair		120	
Maintenance 256 square feet	01A	DOC-01A	Gray Door Caulk	Door Frames	NOB	Fair		20	
Laundry Room & Kitchen Storage 800 square feet	02B, 03B, 04A, 05A, 06A, 07, 08A, 08B	TRN-08A/B DOC-01A	Gray Transite Gray Door Caulk	On Ceiling Door Frames	NF NOB	Fair Fair	100	 80	
Hallway Outside Maintenance 720 square feet	02A, 03A, 09A, 10A	None	No Asbestos Detected				0	0	0
Boiler Room	None	DOC-01A	Gray Door Caulk	Door Frames	NOB	Fair		20	0
Office/Nurse's Area	None	SPK-20A/B	White Spackle	Walls	Friable	Fair	3200		
Speech Therapy Room 144 Square Feet	17-20	CTM-18A/B SPK-20A/B	Black Ceiling Tile Mastic White Spackle	On Walls Behind Ceiling Tile On Walls	NOB Friable	Fair Fair	480 480		
Interior Windows	None	WIG-14A/B	Gray Window Glaze	On Windows	NOB	Fair		6000	
Exterior	21-27	WIC-23/24 SCK-21	Gray Window Caulk Soffit Caulk	On Windows On Exterior Soffit	NOB NOB	Fair Fair		6000 700	
						Totals	4260	13440	0

ACM*- Indicates materials assumed positive for asbestos containing materials by inspector.
U - Inspector unable to determine quantity

** This asbestos survey is a multi-page document which must be viewed in its entirety; see limitations

All quantities in this report are approximations and must be field verified by the Abatement contractor. Contractor bids are expected to be based on their own determinations of quantities and not the approximate quantities stated in this report.

Envoy Environmental Consultants, Inc. certifies that this report regarding Owego North Elementary School, 1 Christa McAuliffe Lane, Owego, New York is based on the observations of the inspector and believes it to be an accurate representation of the conditions as they existed on July 28 – August 1, 2008.

Michael Nowakowski
Envoy Environmental Consultants, Inc.
Inspector #AH 06-11096

** This asbestos survey is a multi-page document which must be viewed in its entirety; see limitations.

Diamond Roofing Co., Inc.

411 CAMBRIDGE AVE., SYRACUSE, NEW YORK 13208
PHONE (315) 454-3291 • FAX (315) 454-8358

March 4, 2002

Welliver McGuire
ATTN: BOB BODEK
911 Stowell Street
P.O. Box 90
Elmira, NY 14902

RE: OWEGO/APALACHIN SCHOOLS

Dear Bob:

Please accept this letter as verification that Diamond Roofing Co., Inc. used only asbestos free materials during the Owego Apalachin School District Phase I Capital Improvements Contract.

If you have any questions, please do not hesitate to call.

Sincerely,

Donald A. DeStefano
President

State of New York
County of Onondaga

Subscribed and Sworn to Before Me This
4th day of March, 2002.

Notary Public

JESSIKA RAUSCHKOLB
Notary Public, State of New York
Registration #01RA6061439
Qualified in Onondaga County
My Commission Expires Aug. 6, 20__

environmental consultants, inc.
57 AMBROSE STREET
ROCHESTER, NEW YORK 14614
585-454-3050 FAX 585-454-1022

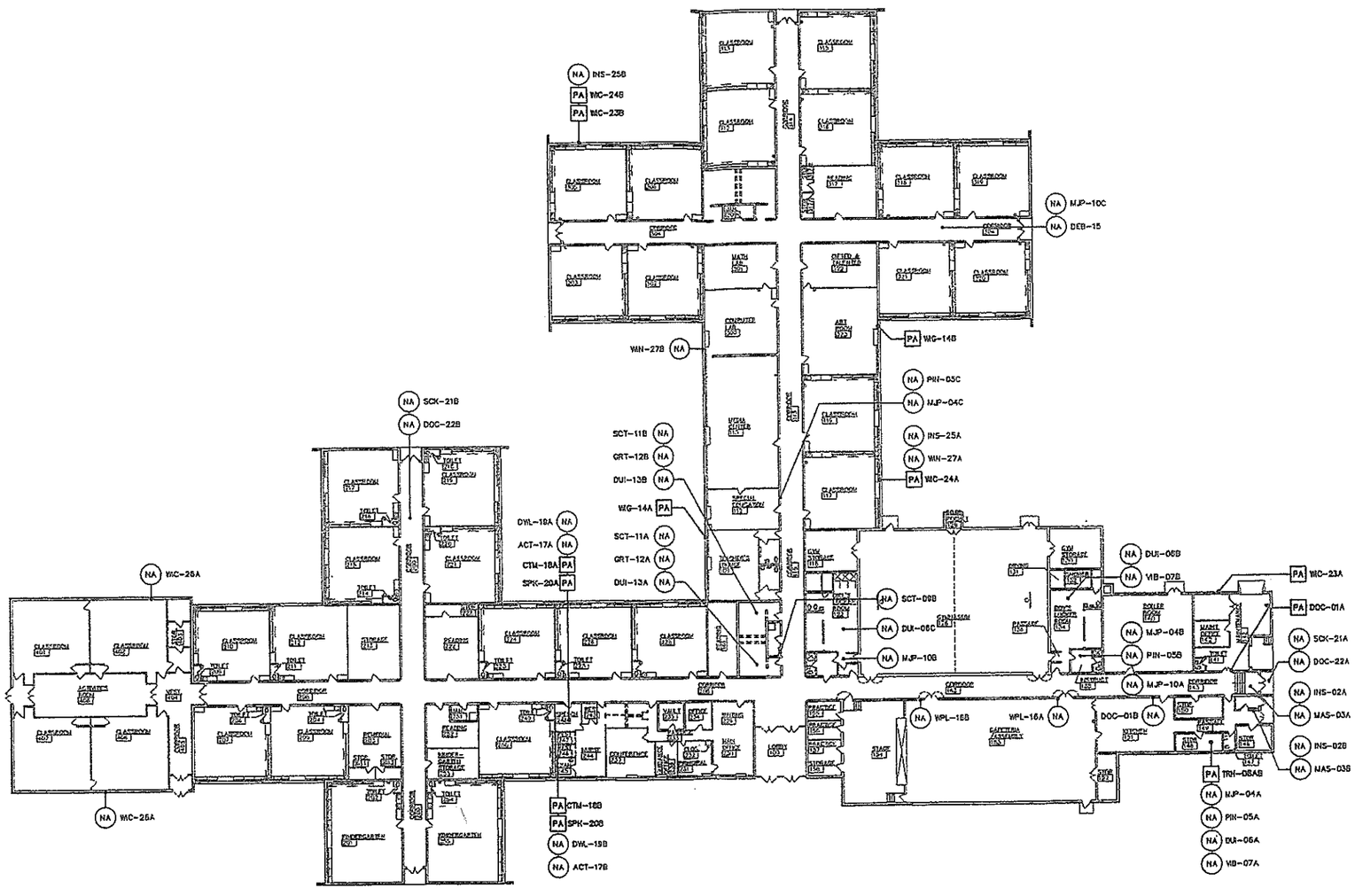

1 / AS-1.1 ASBESTOS SURVEY PLAN
SCALE: 1/16"=1'-0"

ASBESTOS SURVEY KEY

PA POSITIVE ASBESTOS LOCATION

NA NEGATIVE ASBESTOS LOCATION

NOTE: REFER TO THE ANALYTICAL REPORTS FOR ADDITIONAL INFORMATION.

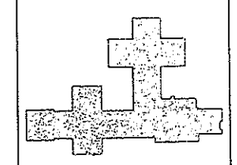

KEY PLAN

OWEGO NORTH ELEMENTARY
SED CONTROL NUMBER
60-06-01-06-0-007-009

PROJECT TITLE:

Owego-Apalachin Central School District

Excel Project
Owego, New York

SEAL:

DRAWING TITLE:

ASBESTOS SURVEY SAMPLE LOCATIONS

DRAWN BY:	CHECKED BY:
A.M.	C.P.L.
DATE: 08/25/05	PROJECT NO: 2007-345p

DRAWING NO:

AS-1.1

PARADIGM ENVIRONMENTAL SERVICES, INC.

179 Lake Avenue Rochester, New York 585-647-2530 FAX 585-647-3311

PLM & TEM BULK ASBESTOS REPORT

Client: Envoy/R. Gonzalez Consulting, Inc.
Location: Owego North Elementary

Job No: 9547-08

Sample Date: 7/28/2008

Client ID	Lab ID	Sampling Location	Description	PLM Asbestos Fibers Type & Percentage	PLM Total Asbestos	NOB	TEM Asbestos Fibers Type & Percentage	TEM Total Asbestos	PLM Non-Asbestos Fibers Type & Percentage	PLM Matrix Material %
DOC-01A	58176	Janitors Office	Gray Door Caulk	Chrysotile 2%	2%	√	Not Required	N/A	None Detected	98%
DOC-01B	58177	Kitchen	Gray Door Caulk	Inconclusive No Asbestos Detected	0%	√	None Detected	<1.0%	None Detected	100%
INS-02A	58178	Side Vestibule	Black Fiborus Insulation	None Detected	0%		Not Required	N/A	Synthetic 50% Animal Hair 20% Cellulose 5%	25%
MAS-03A	58179	Side Vestibule	Black Mastic	Inconclusive No Asbestos Detected	0%	√	None Detected	<1.0%	None Detected	100%
INS-02B	58180	Laundry Room	Black Fiborus Insulation	None Detected	0%		Not Required	N/A	Synthetic 50% Animal Hair 20% Cellulose 5%	25%
MAS-03B	58181	Laundry Room	Black Mastic	Inconclusive No Asbestos Detected	0%	√	None Detected	<1.0%	None Detected	100%
MJP-04A	58182	Kitchen Storage	Gray Fibrous Mudded Joint Packing	None Detected	0%		Not Required	N/A	Mineral Wool 40%	60%
MJP-04B	58183	Boy's Locker Room	Gray Fibrous Mudded Joint Packing	None Detected	0%		Not Required	N/A	Mineral Wool 40%	60%
MJP-04C	58184	Outside Room #112 Hallway	Gray Fibrous Mudded Joint Packing	None Detected	0%		Not Required	N/A	Mineral Wool 40%	60%

NVLAP Lab Code 200530-0 for PLM Analysis **ELAP ID No.: 10958**

New York State Department of Health, ELAP Method 198.1 ,198.4 and 198.6 ("Polarized Light Microscopy and Transmission Electron Microscopy Methods for Identifying and Quantitating Asbestos in Bulk Samples and in Non-Friable Organically Bound Bulk Samples.").

√ NOB (non-friable organically bound) Classified for Analytical Purposes Only.

**** Polarized-light microscopy is not consistently reliable in detecting asbestos in floor coverings and similar non-friable organically bound materials. *Quantitative transmission electron microscopy* is currently the only method that can be used to determine if this material can be considered or treated as non-asbestos containing.**

PLM Date Analyzed: 8/6/2008
Microscope: Olympus BH-2 #233173
PLM Analyst: *F. Childs*

TEM Date Analyzed: 8/7/2008
TEM Analyst: J. Peter Donato

Laboratory Results Approved By: _____
Asbestos Technical Director Mary Dohr

Paradigm Environmental Services, Inc. is not responsible for the data supplied by an independent inspector. National Institute of Standards and Technology Accreditation requirements mandate that this report must not be reproduced except in full without the approval of the laboratory. This PLM report relates ONLY to the items tested. This report must not be used to claim product endorsement by NVLAP or any agency of the U.S. Government. Quality control data (including 95% confidence limits and laboratory and analysts' and precision) is available upon request.

CHAIN OF CUSTODY FOR PLM ASBESTOS ANALYSIS

OFFICE USE ONLY

ENVOY
environmental consultants, inc.
145 Lake Avenue, Rochester, NY 14608
585.454.1060 * Fax 585.454.1062

Client Mailing Address:
8 LAKEWOOD DRIVE
ORCHARD PARK, NY 14127

Client: RGONZALEZ CONSULTING INC.

Contact: ROSA GONZALEZ

Phone Number: (716) 400-3993

Fax Number: R.GONZALEZ@RGCENGINEERS.COM

Results To: SHANE ELKIN

Turn Around Time: 1 [ ] 2 [X] 3 [ ] 5 [ ] Other [ ]

Date Sampled: 7-28-2008

Material Type/Quantity: Friable NOB TEM

Project Location: OWEGO NORTH ELEMENTARY

Project Number: E08/468

Job #: 9547-08

Page 2 of 2 (6)

Date Logged In: 8/4/08

Logged In By: dlb

General Location:

	Client ID	Lab ID	Sampling Location	Do not Analyze	Color	Size	Material	Friability
1	DOC-01A	58176	JANITORS OFFICE		GRAY	—	DOOR CAULK	NO
2	DOC-01B	177	KITCHEN		"	—	"	"
3	INS-02A	178	SIDE VESTIBLE ~~LAUNDRY ROOM~~		BLACK	—	INSULATION	YES
4	MAS-03A	179	"		BLACK	—	MASTIC	NO
5	INS-02B	180	LAUNDRY ROOM		BLACK	—	INSULATION	YES ~~NO~~
6	MAS-03B	181	"		BLACK	—	MASTIC	NO
7	MUP-04A	182	KITCHEN STORAGE		GRAY	—	MUD JOINT PACKING	YES
8	MUP-04B	183	BOYS LOCKER ROOM		"	—	"	"
9	MUP-04C	184	OUTSIDE RM #112 HALLWAY		"	—	"	"
10								

Sampled By: MICHAEL NOWAKOWSKI **Date:** 7-28-2008

Transported to Paradigm By: MICHAEL NOWAKOWSKI **Date:** 7-28-2008

Received By: dlb **Date:** 8/4/08

CHECK ONE: SURVEY [X] BULKS ONLY [ ]

CHECK TO AUTOMATICALLY PERFORM TEM ON NOBS [X]

or provide TEM contact name:

TOTAL NUMBER OF SAMPLES IN SURVEY: 55

Containerized materials attached to this Chain of Custody may contain Asbestos. Asbestos is a known carcinogen and should only be handled by trained and authorized personnel under regulated conditions. **(Danger; May Contain Asbestos Fibers, Cancer and Lung Disease Hazard)**

PARADIGM ENVIRONMENTAL SERVICES, INC.

179 Lake Avenue Rochester, New York 585-647-2530 FAX 585-647-3311

PLM & TEM BULK ASBESTOS REPORT

Client: Envoy/R. Gonzalez Consulting, Inc.
Location: Owego North Elementary

Job No: 9546-08

Sample Date: 7/28/2008

Client ID	Lab ID	Sampling Location	Description	PLM Asbestos Fibers Type & Percentage	PLM Total Asbestos	NOB	TEM Asbestos Fibers Type & Percentage	TEM Total Asbestos	PLM Non-Asbestos Fibers Type & Percentage	PLM Matrix Material %
PIN-05A	58166a	Kitchen Storage	Black/Silver Pipe Wrap	Inconclusive No Asbestos Detected	0%	√	None Detected	<1.0%	None Detected	100%
PIN-05A	58166b	Kitchen Storage	Yellow Fibrous Pipe Insulation	None Detected	0%		Not Required	N/A	Mineral Wool 98%	2%
PIN-05B	58167a	Boy's Locker Room	Black/Silver Pipe Wrap	Inconclusive No Asbestos Detected	0%	√	None Detected	<1.0%	None Detected	100%
PIN-05B	58167b	Boy's Locker Room	Yellow Fibrous Pipe Insulation	None Detected	0%		Not Required	N/A	Mineral Wool 98% Cellulose <1.0%	2%
PIN-05C	58168a	Outside Room #112 Hallway	Black/Silver Pipe Wrap	None Detected	0%	√	<1.0% Residue Remaining TEM not Required	N/A	None Detected	100%
PIN-05C	58168b	Outside Room #112 Hallway	Yellow Fibrous Pipe Insulation	None Detected	0%		Not Required	N/A	Mineral Wool 98% Cellulose <1.0%	2%
DUI-06A	58169a	Kitchen Storage	Black/Silver Pipe Wrap	Inconclusive No Asbestos Detected	0%	√	None Detected	<1.0%	Fiberglass 5%	95%
DUI-06A	58169b	Kitchen Storage	Yellow Fibrous Duct Insulation	None Detected	0%		Not Required	N/A	Mineral Wool 95% Cellulose 2%	3%
DUI-06B	58170a	Boy's Locker Room	Tan/Silver Duct Wrap	Inconclusive No Asbestos Detected	0%	√	None Detected	<1.0%	Fiberglass 5%	95%
DUI-06B	58170b	Boy's Locker Room	Yellow Fibrous Duct Insulation	None Detected	0%		Not Required	N/A	Mineral Wool 98% Cellulose <1.0%	2%

NVLAP Lab Code 200530-0 for PLM Analysis **ELAP ID No.: 10958**

New York State Department of Health, ELAP Method 198.1 ,198.4 and 198.6 ("Polarized Light Microscopy and Transmission Electron Microscopy Methods for Identifying and Quantitating Asbestos in Bulk Samples and in Non-Friable Organically Bound Bulk Samples.").

√ NOB (non-friable organically bound) Classified for Analytical Purposes Only.

**** Polarized-light microscopy is not consistently reliable in detecting asbestos in floor coverings and similar non-friable organically bound materials. *Quantitative transmission electron microscopy* is currently the only method that can be used to determine if this material can be considered or treated as non-asbestos containing.**

1 Date Analyzed: 8/6/2008
Microscope: Olympus BH-2 #234206
PLM Analyst: *B. Weinman*

TEM Date Analyzed: 8/7/2008
TEM Analyst: J. Peter Donato

Laboratory Results Approved By: _____
Asbestos Technical Director Mary Dohr

Paradigm Environmental Services, Inc. is not responsible for the data supplied by an independent inspector. National Institute of Standards and Technology Accreditation requirements mandate that this report must not be reproduced except in full without the approval of the laboratory. This PLM report relates ONLY to the items tested. This report must not be used to claim product endorsement by NVLAP or any agency of the U.S. Government. Quality control data (including 95% confidence limits and laboratory and analysts' and precision) is available upon request.

PARADIGM
ENVIRONMENTAL SERVICES, INC.
179 Lake Avenue Rochester, New York 585-647-2530 FAX 585-647-3[redacted] 11

PLM & TEM BULK ASBESTOS REPORT

Client: Envoy/R Gonzalez Consulting, Inc.
Location: Owego North Elementary

Job No [redacted] 95[illegible]08
Page [redacted] 1 of 2

Sample Date: 7/28/2008

Client ID	Lab ID	Sampling Location	Description	PLM Asbestos Fibers Type & Percentage	PLM Total Asbestos	NOB	TEM Asbestos Fibers Type & Percentage	TEM Total Asbesto[redacted]	PLM Non-Asb Fibers T[illegible] Percen[illegible]
DUI-13A	58185	Boy's Bathroom	Yellow Fibrous Duct Insulation	None Detected	0%		Not Required	N/A	Mineral Wo
DUI-13B	58186	Girl's Bathroom	Yellow Fibrous Duct Insulation	None Detected	0%		Not Required	N/A	Mineral Wo
WIG-14A	58187	Teachers Lounge Room #109	Gray Window Glaze	Chrysotile 3%	3%	√	Not Required	N/A	None Det
WIG-14B	58188	Room #323 Interior	Gray Window Glaze	Chrysotile 3%	3%	√	Not Required	N/A	None Det
DEB-15	58189	Ouside Classroom #318 Hallway	Black Debris	Inconclusive Trace Chrysotile Detected	<1.0%	√	Trace Chrysotile <1.0%	<1.0%	None De[illegible]

NVLAP® Lab Code 200530-0 for PLM Analysis ELAP [redacted] D No.: 1

New York State Department of Health, ELAP Method 198.1 ,198.4 and 198.6 ("Polarized Light Microscopy and Tran[redacted]mission Ele
Microscopy Methods for Identifying and Quantitating Asbestos in Bulk Samples and in Non-Friable Organically Bour[redacted]d Bulk Sam

√ **NOB (non-friable organically bound) Classified for Analytical Purposes Only.**

** **Polarized-light microscopy is not consistently reliable in detecting asbestos in floor coverings and similar non-friable orga[redacted]nically bound materials. *Quantitative transmission electron microscopy* is currently the only method that can be used to determine [redacted]f this material can be considered or treated as non-asbestos containing.**

PLM Date Analyzed: 8/6/2008
Microscope: Olympus BH-2 #234206
PLM Analyst: *B. Weinman*

TEM Date Analyzed: 8/7/2008
TEM Analyst: J. Peter Donato

Laboratory Results Approved By: [redacted]
Asbestos Technical Director Mary Do[redacted]nr

Paradigm Environmental Services, Inc. is not responsible for the data supplied by an independent inspector. National Institute of Standards and Technolo[redacted]y Accreditation requirements mandate that this report must not be reproduced except in full without the approval of the laboratory. This PLM report relates ONLY to the it[redacted]ms tested. This report must not be used to claim product endorsement by NVLAP or any agency of the U.S. Government. Quality control data (including 95% confidence [redacted]mits and laboratory and analysts' and precision) is available upon request.

CHAIN OF CUSTODY FOR PLM ASBESTOS ANALYSIS

OFFICE USE ONLY

ENVOY
environmental consultants, inc.

145 Lake Avenue, Rochester, NY 14608
585.454.1060 * Fax 585.454.1062

Client: RGONZALEZ CONSULTING INC.	**Contact:** ROSA GONZALEZ
Phone Number: (716) 400-3993	**Fax Number:** R.GONZALEZ@RGCENGINEERS.COM
Client Mailing Address: 8 LAKEWOOD DRIVE ORCHARD PARK, NY 14127	**Results To:** SHANE ELKIN
	Turn Around Time: 1 [ ] 2 [X] 3 [ ] 5 [ ] Other [ ]
Date Sampled: 7-28-2008	**Material Type/Quantity:** Friable NOB TEM
Project Location: OWEGO NORTH ELEMENTARY	**Project Number:** E08/468

Job #: 9548-08

Page 2 (6) **of** 2

Date Logged In: 8/4/08

Logged In By: alb

General Location:

	Client ID	Lab ID	Sampling Location	Do not Analyze	Color	Size	Material	Friability
1	DU1-13A	58185	BOYS BATHROOM		YELLOW	—	DUCT INSULATION	YES
2	DU1-13B	186	GIRLS BATHROOM		"	—	"	"
3	WIG-14A	187	TEACHERS LOUNGE RM #109		GRAY	—	WINDOW GLAZE (INTERIOR)	NO
4	WIG-14B	188	RM #323 INTERIOR		"	—	WINDOW GLAZE (INTERIOR)	NO
5	DEB-15	189	OUTSIDE CLASSROOM #315 HALLWAY		BLACK	—	DEBRIS	NO
6								
7								
8								
9								
10								

Sampled By: MICHAEL NOWAKOWSKI **Date:** 7-28-2008

Transported to Paradigm By: MICHAEL NOWAKOWSKI **Date:** 7-28-2008

Received By: alb **Date:** 8/4/08

CHECK ONE: SURVEY [X] BULKS ONLY [ ]

CHECK TO AUTOMATICALLY PERFORM TEM ON NOBS [X]

or provide TEM contact name:

TOTAL NUMBER OF SAMPLES IN SURVEY: 55

Containerized materials attached to this Chain of Custody may contain Asbestos. Asbestos is a known carcinogen and should only be handled by trained and authorized personnel under regulated conditions. ***(Danger; May Contain Asbestos Fibers, Cancer and Lung Disease Hazard)***

PARADIGM ENVIRONMENTAL SERVICES, INC.
179 Lake Avenue Rochester, New York 585-647-2530 FAX 585-647-3311

PLM & TEM BULK ASBESTOS REPORT

Client: Envoy/R. Gonzales Consulting Inc.
Location: Owego North Elementary

Job No: 9545-08
Page: 1 of 2

Sample Date: 7/29/2008

Client ID	Lab ID	Sampling Location	Description	PLM Asbestos Fibers Type & Percentage	PLM Total Asbestos	NOB	TEM Asbestos Fibers Type & Percentage	TEM Total Asbestos	PLM Non-Asbestos Fibers Type & Percentage	PLM Matrix Material %
WPC-016A	58156	Cafeteria	Gray Wall Plaster	None Detected	0%		Not Required	N/A	Cellulose 5%	95%
WPC-16B	58157	Cafeteria	Gray Wall Plaster	None Detected	0%		Not Required	N/A	None Detected	100%
ACT-17A	58158	Speech Therapy Room	Brown Fibrous Adhered Ceiling Tile	None Detected	0%		Not Required	N/A	Cellulose 30% Mineral Wool 60%	10%
CTM-18A	58159	Speech Therapy Room	Black Ceiling Tile Mastic	Chrysotile 5%	5%	√	Not Required	N/A	None Detected	95%
ACT-17B	58160	Speech Therapy Room	Brown Fibrous Adhered Ceiling Tile	None Detected	0%		Not Required	N/A	Cellulose 30% Mineral Wool 60%	10%
CTM-18B	58161	Speech Therapy Room	Black Fibrous Ceiling Tile Mastic	Chrysotile 17%	17%	√	Not Required	N/A	None Detected	83%
DWL-19A	58162	Speech Therapy Room	Gray Drywall	None Detected	0%		Not Required	N/A	Cellulose 3% Fiberglass 1%	96%
SPK-20A	58163	Speech Therapy Room	White Spackle	Chrysotile 4%	4%		Not Required	N/A	None Detected	96%
DWL-19B	58164	Speech Therapy Room	Gray Drywall	None Detected	0%		Not Required	N/A	Cellulose 3% Fiberglass 1%	96%
SPK-20B	58165	Speech Therapy Room	White Spackle	Chrysotile 3%	3%		Not Required	N/A	None Detected	97%

NVLAP Lab Code 200530-0 for PLM Analysis **ELAP ID No.: 10958**

New York State Department of Health, ELAP Method 198.1 ,198.4 and 198.6 ("Polarized Light Microscopy and Transmission Electron Microscopy Methods for Identifying and Quantitating Asbestos in Bulk Samples and in Non-Friable Organically Bound Bulk Samples:").

√ **NOB (non-friable organically bound) Classified for Analytical Purposes Only.**

** **Polarized-light microscopy is not consistently reliable in detecting asbestos in floor coverings and similar non-friable organically bound materials. *Quantitative transmission electron microscopy* is currently the only method that can be used to determine if this material can be considered or treated as non-asbestos containing.**

PLM Date Analyzed: 8/6/2008
Microscope: Olympus BH-2 #233173
PLM Analyst: *F. Childs*

TEM Date Analyzed: N/A
TEM Analyst: N/A

Laboratory Results Approved By: Mary Dohr
Asbestos Technical Director

Paradigm Environmental Services, Inc. is not responsible for the data supplied by an independent inspector. National Institute of Standards and Technology Accreditation requirements mandate that this report must not be reproduced except in full without the approval of the laboratory. This PLM report relates ONLY to the items tested. This report must not be used to claim product endorsement by NVLAP or any agency of the U.S. Government. Quality control data (including 95% confidence limits and laboratory and analysts' and precision) is available upon request.

CHAIN OF CUSTODY FOR PLM ASBESTOS ANALYSIS

OFFICE USE ONLY

ENVOY
environmental consultants, inc.
145 Lake Avenue, Rochester, NY 14608
585.454.1060 * Fax 585.454.1062

Client: RGONZALEZ CONSULTING INC.	Contact: ROSA GONZALEZ
Phone Number: (716) 400-3993	Fax Number: R.GONZALEZ@RGCENGINEERS.COM
Client Mailing Address: 8 LAKEWOOD DRIVE, ORCHARD PARK, NY 14127	Results To: SHANE ELKIN
	Turn Around Time: 1 [ ] 2 [X] 3 [ ] 5 [ ] Other [ ]
	Date Sampled: 7-29-2008
	Material Type/Quantity: Friable NOB TEM
	Project Location: OWEGO NORTH ELEMENTARY
	Project Number: E08/468

Job #: ~~58156~~ FF 9545-08

Page 2 of 2

Date Logged In: 8/4/08

Logged In By: clb

General Location:

	Client ID	Lab ID	Sampling Location	Do not Analyze	Color	Size	Material	Friability
1	WPC-16A	58156	CAFETERIA		GRAY	–	WALL PLASTER	NO
2	WPC-16B	157	"		"	–	"	NO
3	ACT-17A	158	SPEECH THERAPY ROOM		BROWN	–	ADHERED CEILING TILE	YES
4	CTM-18A	159	"		BLACK	–	CEILING TILE MASTIC	NO
5	ACT-17B	160	"		BROWN	–	ADHERED CEILING TILE	YES
6	CTM-18B	161	"		BLACK	–	CEILING TILE MASTIC	NO
7	DWL-19A	162	"		GRAY	–	DRYWALL	YES
8	SPK-20A	163	"		WHITE	–	SPACKLE	NO
9	DWL-19B	164	"		GRAY	–	DRYWALL	YES
10	SPK-20B	165	"		WHITE	–	SPACKLE	NO

Sampled By: MICHAEL NOWAKOWSKI Date: 7-29-08

Transported to Paradigm By: MICHAEL NOWAKOWSKI Date: 7-29-08

Received By: clb Date: 8/4/08

CHECK ONE: SURVEY [X] BULKS ONLY [ ]

CHECK TO AUTOMATICALLY PERFORM TEM ON NOBS [X]

or provide TEM contact name:

TOTAL NUMBER OF SAMPLES IN SURVEY: 55

Containerized materials attached to this Chain of Custody may contain Asbestos. Asbestos is a known carcinogen and should only be handled by trained and authorized personnel under regulated conditions. (Danger; May Contain Asbestos Fibers, Cancer and Lung Disease Hazard)

PLMChainEnvoyrev3 4.25.08.xls

Rev. 10.27.2006

PARADIGM ENVIRONMENTAL SERVICES, INC.
179 Lake Avenue Rochester, New York 585-647-2530 FAX 585-647-3311

PLM & TEM BULK ASBESTOS REPORT

Client: Envoy/R. Gonzalez Consulting, Inc.
Location: Owego North Elementary

Job No: 9542-08

Sample Date: 8/1/2008

Client ID	Lab ID	Sampling Location	Description	PLM Asbestos Fibers Type & Percentage	PLM Total Asbestos	NOB	TEM Asbestos Fibers Type & Percentage	TEM Total Asbestos	PLM Non-Asbestos Fibers Type & Percentage	PLM Matrix Material %
WIN-27A	58140	Exterior By Room #117	Yellow Fibrous Insulation	None Detected	0%		Not Required	N/A	Mineral Wool 98%	2%
WIN-27B	58141	Exterior By Room #217	Yellow Fibrous Insulation	None Detected	0%		Not Required	N/A	Mineral Wool 98%	2%

ELAP ID No.: 10958

NVLAP Lab Code 200530-0 for PLM Analysis

New York State Department of Health, ELAP Method 198.1 ,198.4 and 198.6 ("Polarized Light Microscopy and Transmission Electron Microscopy Methods for Identifying and Quantitating Asbestos in Bulk Samples and in Non-Friable Organically Bound Bulk Samples.").

√ **NOB (non-friable organically bound) Classified for Analytical Purposes Only.**

** **Polarized-light microscopy is not consistently reliable in detecting asbestos in floor coverings and similar non-friable organically bound materials. *Quantitative transmission electron microscopy* is currently the only method that can be used to determine if this material can be considered or treated as non-asbestos containing.**

PLM Date Analyzed: 8/5/2008
Microscope: Olympus BH-2 #233173
PLM Analyst: *F. Childs*

TEM Date Analyzed: N/A
TEM Analyst: N/A

Laboratory Results Approved By: _____
Asbestos Technical Director Mary Dohr

Paradigm Environmental Services, Inc. is not responsible for the data supplied by an independent inspector. National Institute of Standards and Technology Accreditation requirements mandate that this report must not be reproduced except in full without the approval of the laboratory. This PLM report relates ONLY to the items tested. This report must not be used to claim product endorsement by NVLAP or any agency of the U.S. Government. Quality control data (including 95% confidence limits and laboratory and analysts' and precision) is available upon request.

CHAIN OF CUSTODY FOR PLM ASBESTOS ANALYSIS

OFFICE USE ONL

ENVOY
environmental consultants, inc.
145 Lake Avenue, Rochester, NY 14608
585.454.1060 * Fax 585.454.1062

Client: R. GONZALEZ CONSULTING INC.	Contact: ROSA GONZALEZ	Job #: 9542-08
Phone Number: (716) 400-3993	Fax Number: R.GONZALEZ@RGENGINEERS.COM	Page 2 of 2
Client Mailing Address: 8 LAKEWOOD DRIVE ORCHARD PARK, NY 14127	Results To: SHANE ELKIN	Turn Around Time: 1 [ ] 2 [X] 3 [ ] 5 [ ] Other [ ]
	Date Sampled: 8-01-2008	Date Logged In: 8/4/08
	Project Location: OWEGO NORTH ELEMENTARY	Material Type/Quantity: Friable NOB TEM
		Project Number: E08/468
		Logged In By: [signature]

General Location:

	Client ID	Lab ID	Sampling Location	Do not Analyze	Color	Size	Material	Friability
1	WIN-27A	58140	EXTERIOR BY RM # 217 N. North Elem		YELLOW		WINDOW INSULATION	YES
2	WIN-27B	141	"		"		"	"
3	WIN-~~27C~~ 30A	142	EXTERIOR BY RM # ~~305~~ 30 See Anthony Lachin		"		"	"
4	WIN-~~27D~~	143	" 230	YES	"		"	"
5	30B SEE							
6								
7								
8			EMAILED 8/6/08					
9								
10								

EMAILED

Sampled By: MICHAEL NOWAKOWSKI	Date: 8-01-2008	CHECK ONE: SURVEY [X]	BULKS ONLY [ ]
Transported to Paradigm By: MICHAEL NOWAKOWSKI	Date: 8-01-2008	CHECK TO AUTOMATICALLY PERFORM TEM ON NOBS	[X]
		or provide TEM contact name:	
Received By: [signature]	Date: 8/4/08	TOTAL NUMBER OF SAMPLES IN SURVEY:	59

Containerized materials attached to this Chain of Custody may contain Asbestos. Asbestos is a known carcinogen and should only be handled by trained and authorized personnel under regulated conditions. ***(Danger; May Contain Asbestos Fibers, Cancer and Lung Disease Hazard)***

PARADIGM ENVIRONMENTAL SERVICES, INC.
179 Lake Avenue Rochester, New York 585-647-2530 FAX 585-647-3311

PLM & TEM BULK ASBESTOS REPORT

Client: Envoy/R. Gonzalez Consulting, Inc.
Location: Owego North Elementary

Job No: 9544-08

Sample Date: 7/29/2008

Client ID	Lab ID	Sampling Location	Description	PLM Asbestos Fibers Type & Percentage	PLM Total Asbestos	NOB	TEM Asbestos Fibers Type & Percentage	TEM Total Asbestos	PLM Non-Asbestos Fibers Type & Percentage	PLM Matrix Material %
SCK-21A	58146	Exterior Entrance by Janitors Office	Gray Caulk	Chrysotile 3%	3%	√	Not Required	N/A	None Detected	97%
SCK-21B	58147	Exterior by Room #217	Gray Caulk	Chrysotile 4%	4%	√	Not Required	N/A	None Detected	96%
DOC-22A	58148	Exterior Entrance by Janitors Office	Black Door Caulk	Inconclusive No Asbestos Detected	0%	√	None Detected	<1.0%	None Detected	100%
DOC-22B	58149	Exterior by Room #217	Black Door Caulk	Inconclusive No Asbestos Detected	0%	√	None Detected	<1.0%	None Detected	100%
WIC-23A	58150	Exterior Janitors Office	Gray Window Caulk	Chrysotile 5%	5%	√	Not Required	N/A	None Detected	95%
WIC-23B	58151	Exterior by Room #305	Gray Window Caulk	Chrysotile 2%	2%	√	Not Required	N/A	None Detected	98%
WIC-24A	58152	Exterior by Room #117	Gray Window Caulk	Chrysotile 2%	2%	√	Not Required	N/A	None Detected	98%
INS-25A	58153	Exterior by Room #117	Brown Fibrous Insulation	None Detected	0%		Not Required	N/A	Animal Hair 90% Synthetic 8%	2%
WIC-24B	58154	Exterior by Room #305	Gray Window Caulk	Chrysotile 2%	2%	√	Not Required	N/A	None Detected	98%
INS-25B	58155	Exterior by Room #305	Brown Fibrous Insulation	None Detected	0%		Not Required	N/A	Animal Hair 90% Synthetic 8%	2%

NVLAP Lab Code 200530-0 for PLM Analysis **ELAP ID No.: 10958**

New York State Department of Health, ELAP Method 198.1 ,198.4 and 198.6 ("Polarized Light Microscopy and Transmission Electron Microscopy Methods for Identifying and Quantitating Asbestos in Bulk Samples and in Non-Friable Organically Bound Bulk Samples.").

√ NOB (non-friable organically bound) Classified for Analytical Purposes Only.

**** Polarized-light microscopy is not consistently reliable in detecting asbestos in floor coverings and similar non-friable organically bound materials. *Quantitative transmission electron microscopy* is currently the only method that can be used to determine if this material can be considered or treated as non-asbestos containing.**

PLM Date Analyzed: 8/6/2008
Microscope: Olympus BH-2 #232953
PLM Analyst: *J. Peter Donato*

TEM Date Analyzed: 8/7/2008
TEM Analyst: J. Peter Donato

Laboratory Results Approved By: _____
Asbestos Technical Director Mary Dohr

Paradigm Environmental Services, Inc. is not responsible for the data supplied by an independent inspector. National Institute of Standards and Technology Accreditation requirements mandate that this report must not be reproduced except in full without the approval of the laboratory. This PLM report relates ONLY to the items tested. This report must not be used to claim product endorsement by NVLAP or any agency of the U.S. Government. Quality control data (including 95% confidence limits and laboratory and analysts' and precision) is available upon request.

CHAIN OF CUSTODY FOR PLM ASBESTOS ANALYSIS

OFFICE USE ONLY

ENVOY
environmental consultants, inc.

145 Lake Avenue, Rochester, NY 14608
585.454.1060 * Fax 585.454.1062

Client Mailing Address:
8 LAKEWOOD DRIVE
ORCHARD PARK, NY 14127

Client: RGONZALEZ CONSULTING INC.

Contact: ROSA GONZALEZ

Phone Number: (716) 400-3913

Fax Number: R.GONZALEZ@RGCENGINEERS.COM

Results To: SHANE ELKIN

Turn Around Time: 1 [ ] 2 [X] 3 [ ] 5 [ ] Other [ ]

Date Sampled: 7-29-2008

Material Type/Quantity: Friable NOB TEM

Project Location: OWEGO NORTH ELEMENTARY

Project Number: E08/468

Job #: 9544-08

Page 2 **of** 2

Date Logged In: ~~08/08~~ EG 08/04/08

Logged In By: dl

General Location:

	Client ID	Lab ID	Sampling Location	Do not Analyze	Color	Size	Material	Friability
1	SCK-21A	58146	ENTERENCE BY EXTERIOR JANITORS OFFICE		GRAY	—	SOFFIT CAULK	NO
2	SCK-21B	147	EXTERIOR BY ROOM # 217		GRAY	—	"	"
3	DOC-22A	148	ENTERENCE BY EXTERIOR JANITORS OFFICE		BLACK	—	DOOR CAULK	"
4	DOC-22B	149	EXTERIOR BY ROOM # 217		BLACK	—	"	"
5	WIC-23A	150	EXTERIOR JANITORS OFFICE		GRAY	—	WINDOW CAULK	"
6	WIC-23B	151	EXTERIOR BY ROOM # 305		GRAY	—	"	"
7	WIC-24A	152	EXTERIOR BY ROOM # 117		GRAY	—	WINDOW CAULK	"
8	INS-25A	153	EXTERIOR BY ROOM # 117		BROWN	—	INSULATION	"
9	WIC-24B	154	EXTERIOR BY ROOM # 305		GRAY	—	WINDOW CAULK	"
10	INS-25B	155	EXTERIOR BY ROOM # 305		BROWN	—	INSULATION	"

Sampled By: MICHAEL NOWAKOWSKI **Date:** 7-29-2008

Transported to Paradigm By: MICHAEL NOWAKOWSKI **Date:** 7-29-2008

Received By: dl **Date:** 8/4/08

CHECK ONE: SURVEY [X] BULKS ONLY [ ]

CHECK TO AUTOMATICALLY PERFORM TEM ON NOBS [X]

or provide TEM contact name:

TOTAL NUMBER OF SAMPLES IN SURVEY: 55

Containerized materials attached to this Chain of Custody may contain Asbestos. Asbestos is a known carcinogen and should only be handled by trained and authorized personnel under regulated conditions. **(Danger; May Contain Asbestos Fibers, Cancer and Lung Disease Hazard)**

PLMChainEnvoyrev3 4.25.08.xls

Rev. 10.27.2006

PARADIGM ENVIRONMENTAL SERVICES, INC.

179 Lake Avenue Rochester, New York 585-647-2530 FAX 585-647-3311

PLM & TEM BULK ASBESTOS REPORT

Client: Envoy/R. Gonzalez Consulting, Inc.
Location: Owego North Elementary

Job No: 9543-08

Sample Date: 7/29/2008

Client ID	Lab ID	Sampling Location	Description	PLM Asbestos Fibers Type & Percentage	PLM Total Asbestos	NOB	TEM Asbestos Fibers Type & Percentage	TEM Total Asbestos	PLM Non-Asbestos Fibers Type & Percentage	PLM Matrix Material %
WIC-26A	58144	Exterior By Room #402	Brown Window Caulk	Inconclusive No Asbestos Detected	0%	√	None Detected	<1.0%	None Detected	100%
WIC-26B	58145	Exterior By Room #406	Brown Window Caulk	Inconclusive No Asbestos Detected	0%	√	None Detected	<1.0%	None Detected	100%

NVLAP Lab Code 200530-0 for PLM Analysis

ELAP ID No.: 10958

New York State Department of Health, ELAP Method 198.1 ,198.4 and 198.6 ("Polarized Light Microscopy and Transmission Electron Microscopy Methods for Identifying and Quantitating Asbestos in Bulk Samples and in Non-Friable Organically Bound Bulk Samples.").

√ NOB (non-friable organically bound) Classified for Analytical Purposes Only.

**** Polarized-light microscopy is not consistently reliable in detecting asbestos in floor coverings and similar non-friable organically bound materials. *Quantitative transmission electron microscopy* is currently the only method that can be used to determine if this material can be considered or treated as non-asbestos containing.**

PLM Date Analyzed: 8/6/2008
Microscope: Olympus BH-2 #233173
PLM Analyst: *F. Childs*

TEM Date Analyzed: 8/7/2008
TEM Analyst: J. Peter Donato

Laboratory Results Approved By: Mary Dohr
Asbestos Technical Director

Paradigm Environmental Services, Inc. is not responsible for the data supplied by an independent inspector. National Institute of Standards and Technology Accreditation requirements mandate that this report must not be reproduced except in full without the approval of the laboratory. This PLM report relates ONLY to the items tested. This report must not be used to claim product endorsement by NVLAP or any agency of the U.S. Government Quality control data (including 95% confidence limits and laboratory and analysts' and precision) is available upon request.

CHAIN OF CUSTODY FOR PLM ASBESTOS ANALYSIS

OFFICE USE ONLY

ENVOY
environmental consultants, inc.
145 Lake Avenue, Rochester, NY 14608
585.454.1060 * Fax 585.454.1062

Client Mailing Address: 8 LAKEWOOD DRIVE, ORCHARD PARK, NY 14127

Client: RGONZALEZ CONSULTING INC.

Contact: ROSA GONZALEZ

Phone Number: (716) 400-3993

Fax Number: R.GONZALEZ@RGCENGINEERS.COM

Results To: SHANE ELKIN

Turn Around Time: 1 [ ] 2 [X] 3 [ ] 5 [ ] Other [ ]

Date Sampled: 7-29-2008

Material Type/Quantity: Friable NOB TEM

Project Location: OWEGO NORTH ELEMENTARY

Project Number: E08/468

Job #: 9543-08

Page 2 of 2

Date Logged In: 08/04/08

Logged In By: [signature]

General Location:

	Client ID	Lab ID	Sampling Location	Do not Analyze	Color	Size	Material	Friability
1	WIC-26A	58144	EXTERIOR BY ROOM # 402		BROWN	—	WINDOW CAULK	NO
2	WIC-26B	145	EXTERIOR BY ROOM # 406		BROWN	—	WINDOW CAULK	NO
3								
4								
5								
6								
7								
8								
9								
10								

Sampled By: MICHAEL NOWAKOWSKI **Date:** 7-29-2008

Transported to Paradigm By: MICHAEL NOWAKOWSKI **Date:** 7-29-2008

Received By: [signature] **Date:** 08/04/08

CHECK ONE: SURVEY [X] BULKS ONLY [ ]

CHECK TO AUTOMATICALLY PERFORM TEM ON NOBS [X]

or provide TEM contact name:

TOTAL NUMBER OF SAMPLES IN SURVEY: 55

Containerized materials attached to this Chain of Custody may contain Asbestos. Asbestos is a known carcinogen and should only be handled by trained and authorized personnel under regulated conditions. ***(Danger; May Contain Asbestos Fibers, Cancer and Lung Disease Hazard)***

PARADIGM ENVIRONMENTAL SERVICES, INC.
179 Lake Avenue Rochester, New York 585-647-2530 FAX 585-647-3311

PLM & TEM BULK ASBESTOS REPORT

Client: Envoy/R. Gonzalez Consulting, Inc.
Location: Owego North Elementary

Job No: 9549-08

Sample Date: 7/28/2008

Client ID	Lab ID	Sampling Location	Description	PLM Asbestos Fibers Type & Percentage	PLM Total Asbestos	NOB	TEM Asbestos Fibers Type & Percentage	TEM Total Asbestos	PLM Non-Asbestos Fibers Type & Percentage	PLM Matrix Material %
SCT-09A	58190	Outside Janitors Office Hallway	Gray Fibrous 2"X2" Suspended Ceiling Tile	None Detected	0%		Not Required	N/A	Cellulose 20% Mineral Wool 70%	10%
SCT-09B	58191	Outside Boys Bathroom Hallway	Gray Fibrous 2"X2" Suspended Ceiling Tile	None Detected	0%		Not Required	N/A	Cellulose 20% Mineral Wool 70%	10%
MJP-10A	58192	Hallway (Roof Drain)	Gray Fibrous Mudded Joint Packing	Trace Chrysotile	<1.0%		Not Required	N/A	Mineral Wool 40%	60%
MJP-10B	58193	Girls Locker Room (Roof Drain)	Gray Fibrous Mudded Joint Packing	Trace Chrysotile	<1.0%		Not Required	N/A	Mineral Wool 40%	60%
MJP-10C	58194	Outside Classroom #318 (Roof Drain)	Gray Fibrous Mudded Joint Packing	None Detected	0%		Not Required	N/A	Mineral Wool 40%	60%
SCT-11A	58195	Boys Bathroom	Gray Fibrous 1'X1" Suspended Ceiling Tile	None Detected	0%		Not Required	N/A	Cellulose 20% Mineral Wool 70%	10%
SCT-11B	58196	Girls Bathroom	Gray Fibrous 1'X1" Suspended Ceiling Tile	None Detected	0%		Not Required	N/A	Cellulose 20% Mineral Wool 70%	10%
GRT-12A	58197	Boys Bathroom	Gray Ceramic Tile Grout	None Detected	0%		Not Required	N/A	None Detected	100%
GRT-12B	58198	Girls Bathroom	Gray Ceramic Tile Grout	None Detected	0%		Not Required	N/A	None Detected	100%

NVLAP Lab Code 200530-0 for PLM Analysis **ELAP ID No.: 10958**

New York State Department of Health, ELAP Method 198.1 ,198.4 and 198.6 ("Polarized Light Microscopy and Transmission Electron Microscopy Methods for Identifying and Quantitating Asbestos in Bulk Samples and in Non-Friable Organically Bound Bulk Samples").

√ NOB (non-friable organically bound) Classified for Analytical Purposes Only.

** Polarized-light microscopy is not consistently reliable in detecting asbestos in floor coverings and similar non-friable organically bound materials. *Quantitative transmission electron microscopy* is currently the only method that can be used to determine if this material can be considered or treated as non-asbestos containing.

PLM Date Analyzed: 8/6/2008
Microscope: Olympus BH-2 #233173
PLM Analyst: *F. Childs*

TEM Date Analyzed: N/A
TEM Analyst: N/A

Laboratory Results Approved By: Mary Dohr
Asbestos Technical Director

Paradigm Environmental Services, Inc. is not responsible for the data supplied by an independent inspector. National Institute of Standards and Technology Accreditation requirements mandate that this report must not be reproduced except in full without the approval of the laboratory. This PLM report relates ONLY to the items tested. This report must not be used to claim product endorsement by NVLAP or any agency of the U.S. Government. Quality control data (including 95% confidence limits and laboratory and analysts' and precision) is available upon request.

CHAIN OF CUSTODY FOR PLM ASBESTOS ANALYSIS

OFFICE USE ONLY

ENVOY
environmental consultants, inc.
145 Lake Avenue, Rochester, NY 14608
585.454.1060 * Fax 585.454.1062

Client Mailing Address: 8 LAKEWOOD DRIVE, ORCHARD PARK, NY 14127

Client: RGONZALEZ CONSULTING INC.

Phone Number: (716) 400-3993

Results To: SHANE ELKIN

Date Sampled: 7-28-08

Project Location: OWEGO NORTH ELEMENTARY

Contact: ROSA GONZALEZ

Fax Number: R.GONZALEZ@RGCENGINEERS.COM

Turn Around Time: 1 [ ] 2 [X] 3 [ ] 5 [ ] Other [ ]

Material Type/Quantity: Friable NOB TEM

Project Number: E08/468

Job #: 9549-08

Page 2 of 2

Date Logged In: 8/4/08

Logged In By: [signature]

General Location:

	Client ID	Lab ID	Sampling Location	Do not Analyze	Color	Size	Material	Friability
1	SCT-09A	58190	OUTSIDE JANITORS OFFICE HALLWAY		GRAY	2x2	SUSPENDED CEILING TILE	YES
2	SCT-09B	191	OUTSIDE BOYS BATHROOM HALLWAY		"	2x2	"	"
3	MJP-10A	192	HALLWAY (ROOF DRAIN)		GRAY	—	MUD JOINT PACKING	YES
4	MJP-10B	193	GIRLS LOCKER ROOM (ROOF DRAIN)		"	—	"	YES
5	MJP-10C	194	OUTSIDE CLASSROOM #318 (ROOF DRAIN)		"	—	"	YES
6	SCT-11A	195	BOYS BATHROOM		GRAY	1x1	SUSPENDED CEILING TILE	YES
7	SCT-11B	196	GIRLS BATHROOM		"	1x1	"	YES
8	GRT-12A	197	BOYS BATHROOM		GRAY	—	CERAMIC TILE GROUT	NO
9	GRT-12B	198	GIRLS BATHROOM		GRAY	—	CERAMIC TILE GROUT	NO
10								

Sampled By: MICHAEL NOWAKOWSKI Date: 7-28-08

Transported to Paradigm By: MICHAEL NOWAKOWSKI Date: 7-28-08

Received By: [signature] Date: 8/4/08

CHECK ONE: SURVEY [X] BULKS ONLY [ ]

CHECK TO AUTOMATICALLY PERFORM TEM ON NOBS [X]

or provide TEM contact name:

TOTAL NUMBER OF SAMPLES IN SURVEY: 55

Containerized materials attached to this Chain of Custody may contain Asbestos. Asbestos is a known carcinogen and should only be handled by trained and authorized personnel under regulated conditions. (Danger; May Contain Asbestos Fibers, Cancer and Lung Disease Hazard)

PLMChainEnvoyrev3 4.25.08.xls

Rev. 1 0.27.2006

ASBESTOS SURVEY DRAWINGS

FOR

NORTH ELEMENTARY SCHOOL BUILDING

OWEGO, NEW YORK

Certifications