Final Environmental Assessment

Victor Valley Wastewater Reclamation Authority (VVWRA) Upper Narrows Pipelines Replacement Project

April 2013

FEMA

U.S. Department of Homeland Security
1111 Broadway, Suite 1200
Oakland, California 94607

This document was prepared by

Tom Dodson & Associates
2150 North Arrowhead Avenue
San Bernardino, California 92405
(909) 882-3612

FINAL ENVIRONMENTAL ASSESSMENT

FOR

VICTOR VALLEY WASTEWATER RECLAMATION AUTHORITY

UPPER NARROWS PIPELINE

REPLACEMENT PROJECT

Prepared for
Federal Emergency Management Agency

Prepared by
Tom Dodson & Associates

April 2013

FEMA

FINAL

ENVIRONMENTAL ASSESSMENT

FOR

VICTOR VALLEY WASTEWATER RECLAMATION AUTHORITY

UPPER NARROWS PIPELINE REPLACEMENT PROJECT

April 2013

Prepared by

Tom Dodson & Associates
2150 North Arrowhead Avenue
San Bernardino, California 92405
(909) 882-3612

US Department of Homeland Security
1111 Broadway, Suite 1200
Oakland, California 94607

FINDING OF NO SIGNIFICANT IMPACT

FINDING OF NO SIGNIFICANT IMPACT
Victor Valley Wastewater Reclamation Authority
Upper Narrows Pipelines Replacement Project
FEMA-1952-DR-CA, PW #828

The Victor Valley Wastewater Reclamation Authority (VVWRA) has applied for funds through the California Emergency Management Agency to the U.S. Department of Homeland Security's Federal Emergency Management Agency (FEMA) Region IX Public Assistance Program to restore sewer service. Damaged occurred as a result of the flood event between December 17, 2010, to January 4, 2011, known as the Presidentially declared disaster FEMA-DR-1952-CA. The portion of the sewer system which conveyed 14 million gallons per day was located in the Mojave River and failed as a result of the disaster. The damaged sewer line was replaced with temporary sewage conveyance facilities which are inadequate for permanent use. FEMA proposes to provide funding to VVWRA to permanently restore sewer service (PW 828).

VVWRA proposes to restore the function and capacity of the damaged Mojave River sewer line. The proposal involves placing the new sewer line as deep as possible under the Mojave River and relocating that portion of the sewer line on the west side of the Mojave River out of the riverbed, and constructing it along the streets in the adjacent City of Victorville. The existing damaged interceptor would remain within the riverbed and become fish habitat. The exposed manholes would be closed in place or removed if possible, to limit the visual appearance of any remains of the pipeline. The proposed action would use a combination of construction technologies to route flow through and around the Upper Narrows section of the Mojave River, including horizontal directional drilling (HDD), tunneling, jack and bore, and open trenching, and would install high-density polyethylene (HDPE)-type pipeline or other state-of-the-art pipeline material, rather than the same pipe type that is currently used for the sewer line, which is vitrified clay pipe. The approximate total linear feet of replacement pipeline is 6,430.

In accordance with the National Environmental Policy Act of 1969, as amended, FEMA has prepared a Final Environmental Assessment (EA) *Upper Narrows Pipelines Replacement Project* (April 2013) to evaluate the impacts of the Proposed Action and alternatives on the quality of the human environment. The Final EA includes measures that will be implemented to mitigate, minimize, and avoid impacts to the human environment. The Final EA was prepared after a Draft EA was submitted for public review and comment. FEMA incorporated relevant comments into the Final EA. The Final EA is available online at www.vvwra.org.

Based upon the conditions and the information contained in the Final EA, a review of the applicable laws or orders, and compliance with FEMA's regulations in 44 CFR Part 10 (Environmental Considerations) and 44 CFR Part 9 (Floodplain Management and Wetland Protection), the following is concluded:

A Finding of No Significant Impact. Therefore an Environmental Impact Statement will not be prepared. For more information, contact the undersigned at (510) 627-7027 or fema-rix-ehp-documents@fema.dhs.gov

No action will be allowed to occur until 15 days after publication of this Finding of No Significant Impact.

05/07/13

Alessandro Amaglio — Date
Region IX Environmental Officer

PROOF OF PUBICATIONS

PROOF OF PUBLICATION

(2015.5 C.C.P.)

STATE OF CALIFORNIA,
County of San Bernardino

I am a citizen of the United States and a resident of the County aforesaid; I am over the age of eighteen years, and not a party to or interested in the above entitled matter. I am the principal clerk of the publisher of the DAILY PRESS, a newspaper of general circulation, published in the City of Victorville, County of San Bernardino, and which newspaper has been adjudicated a newspaper of general circulation by the Superior Court of the County of San Bernardino, State of California, under the date of November 21, 1938, Case number 43096, that the notice, of which the annexed is a printed copy (set in type not smaller than nonpareil), has been published in each regular and entire issue of said newspaper and not in any supplement thereof on the following dates, to-wit:

May 13

All in the year 2013.

I certify (or declare) under penalty of perjury that the foregoing is true and correct.

Dated this: 13th **day of** May, **2013.**

Signature

Leslie Jacobs

This space is the County Clerk's Filing Stamp

Proof of Publication of
FINDING OF NO SIGNIFICANT IMPACT

FINDING OF NO SIGNIFICANT IMPACT
Victor Valley Wastewater Reclamation Authority
Upper Narrows Pipelines Replacement Project
FEMA-1952-DR-CA, PW #828

The Victor Valley Wastewater Reclamation Authority (VVWRA) has applied for funds through the California Emergency Management Agency to the U.S. Department of Homeland Security's Federal Emergency Management Agency (FEMA) Region IX Public Assistance Program to restore sewer service. Damaged occurred as a result of the flood event between December 17, 2010, to January 4, 2011, known as the Presidentially declared disaster FEMA-DR-1952-CA. The portion of the sewer system which conveyed 14 million gallons per day was located in the Mojave River and failed as a result of the disaster. The damaged sewer line was replaced with temporary sewage conveyance facilities which are inadequate for permanent use. FEMA proposes to provide funding to VVWRA to permanently restore sewer service (PW 828).

VVWRA proposes to restore the function and capacity of the damaged Mojave River sewer line. The proposal involves placing the new sewer line as deep as possible under the Mojave River and relocating that portion of the sewer line on the west side of the Mojave River out of the riverbed, and constructing it along the streets in the adjacent City of Victorville. The existing damaged interceptor would remain within the riverbed and become fish habitat. The exposed manholes would be closed in place or removed if possible, to limit the visual appearance of any remains of the pipeline. The proposed action would use a combination of construction technologies to route flow through and around the Upper Narrows section of the Mojave River, including horizontal directional drilling (HDD), tunneling, jack and bore, and open trenching, and would install high-density polyethylene (HDPE)-type pipeline or other state-of-the-art pipeline material, rather than the same pipe type that is currently used for the sewer line, which is vitrified clay pipe. The approximate total linear feet of replacement pipeline is 6,430.

In accordance with the National Environmental Policy Act of 1969, as amended, FEMA has prepared a Final Environmental Assessment (EA) Upper Narrows Pipelines Replacement Project (April 2013) to evaluate the impacts of the Proposed Action and alternatives on the quality of the human environment.
The Final EA includes measures that will be implemented to mitigate, minimize, and avoid impacts to the human environment. The Final EA was prepared after a Draft EA was submitted for public review and comment. FEMA incorporated relevant comments into the Final EA. The Final EA is available online at www.vvwra.org.

Based upon the conditions and the information contained in the Final EA, a review of the applicable laws or orders, and compliance with FEMA's regulations in 44 CFR Part 10 (Environmental Considerations) and 44 CFR Part 9 (Floodplain Management and Wetland Protection), the following is concluded:

A Finding of No Significant Impact. Therefore an Environmental Impact Statement will not be prepared. For more information, contact the undersigned at (510) 627-7027 or fema-rix-ehp-documents@fema.dhs.gov

No action will be allowed to occur until 15 days after publication of this Finding of No Significant Impact.

Original signed
5/7/13 (on file)

Alessandro Amaglio
Date
Region IX Environmental Officer

Published in the
Daily Press
May 13, 2013
(M-15)

OF PUBLICATION

(2015.5 C.C.P.)

STATE OF CALIFORNIA,
County of San Bernardino

I am a citizen of the United States and a resident of the County aforesaid; I am over the age of eighteen years, and not a party to or interested in the above entitled matter. I am the principal clerk of the publisher of the DAILY PRESS, a newspaper of general circulation, published in the City of Victorville, County of San Bernardino, and which newspaper has been adjudicated a newspaper of general circulation by the Superior Court of the County of San Bernardino, State of California, under the date of November 21, 1938, Case number 43096, that the notice, of which the annexed is a printed copy (set in type not smaller than nonpareil), has been published in each regular and entire issue of said newspaper and not in any supplement thereof on the following dates, to-wit:

April 11

All in the year 2013.

I certify (or declare) under penalty of perjury that the foregoing is true and correct.

Dated this: 11th **day of** April, **2013.**

Signature

Leslie Jacobs

This space is the County Clerk's Filing Stamp

Proof of Publication of
NOTICE OF AVAILABILITY

Notice of Availability
Draft Environmental Assessment
Victor Valley Wastewater Reclamation Authority
Upper Narrows Pipeline Replacement Project
Federal Emergency Management Agency

The Victor Valley Wastewater Reclamation Authority (VVWRA) has applied for funds through the California Emergency Management Agency to the Federal Emergency Management Agency (FEMA) Region IX Public Assistance Program to restore sewer service. Damaged occurred as a result of the flood event between December 17, 2010, to January 4, 2011, known as the Presidentially declared disaster FEMA-DR-1952-CA. The portion of the sewer system which conveyed 14 million gallons per day was located in the Mojave River and failed as a result of the disaster. The damaged sewer line was replaced with temporary sewage conveyance facilities which are inadequate for permanent use. FEMA proposes to provide funding to VVWRA to permanently restore sewer service (PW 828).

VVWRA proposes to restore the function and capacity of the damaged Mojave River sewer line. The proposal involves placing the new sewer line as deep as possible under the Mojave River and relocating that portion of the sewer line on the west side of the Mojave River out of the riverbed, and constructing it along the streets in the adjacent City of Victorville. The existing damaged interceptor would remain within the riverbed and become fish habitat. The exposed manholes would be closed in place or removed if possible, to limit the visual appearance of any remains of the pipeline. The proposed action would use a combination of construction technologies to route flow through and around the Upper Narrows section of the Mojave River, including horizontal directional drilling (HDD), tunneling, jack and bore, and open trenching, and would install high-density polyethylene (HDPE)-type pipeline or other state-of-the-art pipeline material, rather than the same pipe type that is currently used for the sewer line, which is vitrified clay pipe. The approximate total linear feet of replacement pipeline is 6,430.

FEMA has prepared a Draft Environmental Assessment (DEA) for this project pursuant to the National Environmental Policy Act and the Council on Environmental Quality and FEMA's implementing regulations. The DEA, which evaluates the environmental impacts of the Proposed Action, Alternative Actions and the No Action Alternative, is available for public review and comment. The DEA is available online at http://www.vvwra.com. A copy of the DEA may also be viewed at VVWRA, 15776 Main Street, Suite 3, Hesperia, CA 92345; Victorville City Library, 15011 Circle Drive, Victorville, CA 92395; and Apple Valley Public Library, 15001 Wakita Blvd., Apple Valley, CA 92307. Point of contact to review the DEA at VVWRA is Mr. Logan Olds, who can be reached at 760-948-9849, ext. 110.

To request a copy of the DEA or to provide comments regarding the DEA, please direct correspondence to Environmental Officer, FEMA Region IX, 1111 Broadway, Suite 1200, Oakland, CA 94607 or fema-rix-ehp-documents@fema.dhs.gov. For more information, please leave a message for the FEMA Region IX Environmental Officer at (510) 627-7027.

Comments on the DEA must be received by April 26, 2013. Until that date, FEMA will take no further action regarding the proposed project.

Published in the Daily Press
April 11, 2013
(1h-14)

RESPONSES TO COMMENTS

COMMENT LETTER #1

Mojave Desert Air Quality Management District
14306 Park Avenue, Victorville, CA 92392-2310
760.245.1661 • fax 760.245.2699
Visit our web site: http://www.mdaqmd.ca.gov
Eldon Heaston, Executive Director

RECEIVED
APR 17 2013
BY:

April 11, 2013

Alessandro Amaglio, Regional Environmental Manager
U.S. Department of Homeland Security
Region IX
1111 Broadway, Suite 1200
Oakland, CA 94607-4052

Project Title: Victor Valley Wastewater Reclamation Authority (VVWRA) Upper Narrows Pipeline Replacement Project

Dear Mr. Amaglio:

1-1 The Mojave Desert Air Quality Management District (District) has received the Draft Environmental Assessment for the VVWRA Upper Narrows Pipelines Replacement Project. The need for the Proposed Action is to restore service provided by the damaged sewer interceptor line which is currently under emergency bypass. The purpose of the Proposed Action is to restore permanent infrastructure to transport the wastewater from the Town of Apple Valley to the regional Westside Water Reclamation Facility. One of the main objectives is to restore the pipeline in a protected manner to achieve greater public health safety for residents who are serviced by this sewer line, while protecting the waters of the Mojave River, community water supply, and the ecosystem from downstream pollution caused by potential sewer ruptures during future major flooding events.

Based on the information provided in the Draft Environmental Assessment, the District concurs with the Air Quality Analysis, and the Air Quality Mitigation Measures (3.1.5-1 thru 3.1.5-12).

Thank you for the opportunity to review this planning document. If you have any questions regarding this letter, please contact me at (760) 245-1661, extension 6726, or Tracy Walters at extension 6122.

Sincerely,

Alan J. De Salvio
Supervising Air Quality Engineer

AJD/tw VVWRA UNPRP DEA

COMMENT LETTER #1
MOJAVE DESERT AIR QUALITY MANAGEMENT DISTRICT

1-1 This letter and your comments have been noted and filed for the record.

COMMENT LETTER #2

DEPARTMENT OF PUBLIC WORKS

FLOOD CONTROL • LAND DEVELOPMENT & CONSTRUCTION • OPERATIONS
SOLID WASTE MANAGEMENT • SURVEYOR • TRANSPORTATION

COUNTY OF SAN BERNARDINO

825 East Third Street • San Bernardino, CA 92415-0835 • (909) 387-8104
Fax (909) 387-8130

GERRY NEWCOMBE
Director of Public Works

April 25, 2013

10(ENV)-4.01

RECEIVED
APR 29 2013
BY:

Mr. Alessandro Amaglio
U.S. Department of Homeland Security
Federal Emergency Management Agency, Region IX
1111 Broadway, Suite 1200
Oakland, CA 94607-4052

RE: NOTICE OF AVAILABILITY OF ENVIRONMENTAL ASSESSMENT FOR THE VICTOR VALLEY WASTEWATER RECLAMATION AUTHORITY (VVWRA) UPPER NARROWS PIPELINE REPLACEMENT PROJECT, FEMA DR-1952-PW828

Dear Mr. Amaglio:

Thank you for giving the County of San Bernardino Department of Public Works (Department) the opportunity to comment on the above-referenced project. We received this request on April 10, 2013, and pursuant to our review, the following comments are provided:

Water Resources Division (MaryLou Mermilliod, P.E., (909) 387-8213):

2-1

1. In general, it appears the project has addressed the major concerns of the San Bernardino Flood Control District (District). However, the District's recommendations are made for specific conditions and, therefore, the recommendations made here are general in nature until such time as more detailed plans become available.
2. If any encroachment onto District right-of-way is anticipated, a permit will be required from the District's Permits/Operations Support Division. Other on-site or off-site improvements may be required which cannot be determined at this time.
3. We recommend that the most current FEMA regulations for construction within established floodplains and the Regulatory Floodway be enforced by the City of Victorville.

Should you have any questions or require additional information, please contact Mary Lou Mermilliod at the telephone number provided above.

Sincerely,

ANNESLEY IGNATIUS, P.E.
Deputy Director – Land Development & Construction

ARI:EJH:nh/CEQA Comments_FEMA_VVWRA Upper Narrows Pipeline Replacement

GREGORY C. DEVEREAUX
Chief Executive Officer

Board of Supervisors
ROBERT A. LOVINGOOD . . . . . First District
JANICE RUTHERFORD . . . . . Second District
JOSIE GONZALES . . . . . Fifth District
JAMES RAMOS . . . . . Third District
GARY C. OVITT . . . . . Fourth District

COMMENT LETTER #2
COUNTY OF SAN BERNARDINO
DEPARTMENT OF PUBLIC WORKS

2-1 This letter and your comments have been noted and filed for the record. All necessary encroachment permits will be obtained and construction will be carried out in accordance with FEMA regulations.

DRAFT ENVIRONMENTAL ASSESSMENT

Draft Environmental Assessment

Victor Valley Wastewater Reclamation Authority (VVWRA) Upper Narrows Pipelines Replacement Project

April 2013

FEMA

U.S. Department of Homeland Security
1111 Broadway, Suite 1200
Oakland, California 94607

This document was prepared by

Tom Dodson & Associates
2150 North Arrowhead Avenue
San Bernardino, California 92405
(909) 882-3612

DRAFT ENVIRONMENTAL ASSESSMENT

FOR

VICTOR VALLEY WASTEWATER RECLAMATION AUTHORITY

UPPER NARROWS PIPELINE

REPLACEMENT PROJECT

Prepared for
Federal Emergency Management Agency

Prepared by
Tom Dodson & Associates

April 2013

FEMA

DRAFT

ENVIRONMENTAL ASSESSMENT

FOR

VICTOR VALLEY WASTEWATER RECLAMATION AUTHORITY

UPPER NARROWS PIPELINE REPLACEMENT PROJECT

April 2013

Prepared by

Tom Dodson & Associates
2150 North Arrowhead Avenue
San Bernardino, California 92405
(909) 882-3612

US Department of Homeland Security
1111 Broadway, Suite 1200
Oakland, California 94607

TABLE OF CONTENTS

Chapter 1 – INTRODUCTION 1

1.1 Project Authority 1
1.2 Project Location 2
1.3 Purpose and Need 2

Chapter 2 – ALTERNATIVE ANALYSIS 4

2.1 No Action Alternative 4
2.2 Alternative 1 (In-Kind Repair) 4
2.3 Alternative 2 (Replacement by Tunneling) 6
2.4 Alternatives Considered but Eliminated from Further Discussion 11

Chapter 3 – AFFECTED ENVIRONMENT AND ENVIRONMENTAL CONSEQUENCES 12

3.1 Physical Environment 12
3.1.1 Geology, Seismicity and Soils 12
3.1.2 Water Resources and Water Quality 14
3.1.3 Floodplain Management – Executive Order 11988 18
3.1.4 Protection of Wetland – Executive Order 11990 20
3.1.5 Air Resources and Air Quality 21
3.2 Biological Environment 34
3.2.1 Terrestrial and Aquatic Environment 34
3.2.2 Threatened and Endangered Species 41
3.2.3 Invasive Species – Executive Order 13112 42
3.3 Hazardous Materials 43
3.4 Socioeconomics 45
3.4.1 Zoning and Land Use 45
3.4.2 Visual Resources 46
3.4.3 Noise 47
3.4.4 Public Services and Utilities 49
3.4.5 Traffic and Circulation 52
3.4.6 Environmental Justice – Executive Order 12898 53
3.5 Cultural Resources 54
3.5.1 Historical Properties 54
3.6 Cumulative Impacts 57

Chapter 4 – SUMMARY OF MITIGATION MEASURES 59

Chapter 5 – LIST OF PREPARERS 65

LIST OF TABLES

Table 2.2-1 Scope and Limits of Work for Alternative 1 6
Table 2.3-1 Scope and Limits of Work for Alternative 2 10

Table 3.1.5-1 CARB Ambient Air Quality Standards 23
Table 3.1.5-2 Victorville Monitoring Station Project Area Air Quality Monitoring Summary 25
Table 3.1.5-3 Hesperia Monitoring Station Project Area Air Quality Monitoring Summary 26
Table 3.1.5-4 MDAQMD Emissions Thresholds 27
Table 3.1.5-5 Federal *De Minimis* Thresholds 27
Table 3.1.5-6 Daily Diesel Pump Emissions 28
Table 3.1.5-7 Attainment Status for Criteria Pollutants 30
Table 3.1.5-8 Annual Unmitigated Construction Emissions 31

LIST OF FIGURES

Figure 1 Project Vicinity
Figure 2 Site Location
Figure 3 Damaged Section and New Pipeline Alignment
Figure 4 Scaled Aerial Image Exhibit Only Approximate Alignments
Figure 5 Construction Area, Portals and Staging Areas Alternative 2
Figure 6 Potential Future Noise Contours Central City Planning Area

Figure 3.1.1-1 Regional Seismic Hazards
Figure 3.1.2-1 MWA Location
Figure 3.1.2-2 Base Map
Figure 3.1.2-3 Hydrologic Setting
Figure 3.1.2-4 Total Dissolved Solids
Figure 3.1.2-5 Nitrates
Figure 3.1.2-6 Manganese
Figure 3.1.2-7 Iron
Figure 3.1.2-8 Fluoride
Figure 3.1.2-9 Arsenic

APPENDICES

Appendix 1 – Engineering Drawings
Appendix 2 – FEMA Maps
Appendix 3 – Biological Assessment
Appendix 4 – Air Quality Analysis
Appendix 5 – FEMA Letter Response
Appendix 6 – Cultural Resources / SHPO

LIST OF ACROYNMS AND ABBREVIATIONS

AAQS	ambient air quality standards
APCD	Air Pollution Control Districts
APE	area of potential effect
AQMD	Air Quality Management District
AQMP	Air Quality Management Plan
AVFPD	Apple Valley Fire Protection District
BMPs	Best Management Practices
BNSF	BNSF Railway Company
CAA	Clean Air Act
CalEMA	California Emergency Management Agency
Cal-EPA	California Environmental Protection Agency
Caltrans	California Department of Transportation
CARB	California Air Resources Board
CCAA	California Clean Air Act
CDFW	California Department of Fish and Wildlife
CEQ	Council of Environmental Quality
CEQA	California Environmental Quality Act
CFR	Code of Federal Regulations
CIA	Cumulative Impact Analysis
CIWMP	Countywide Integrated Waste Management Plan
CNEL	Community Noise Equivalent Level
COE/Corps	U.S. Army Corps of Engineers
CRM	CRM TECH
CSA	County Service Area
CWA	Clean Water Act
dB	decibel
dBA	A-weighted decibel
DIP	ductile iron pipe
DPH	Department of Public Health
DWR	Department of Water Resources
EA	Environmental Assessment
EIR	Environmental Impact Report
EO	Executive Order
EPA	U.S. Environmental Protection Agency
ESA	Endangered Species Act
FEMA	Federal Emergency Management Agency
FIRM	Flood Insurance Rate Map
GHG	greenhouse gas
HDD	horizontal directional drilling
HDPE	high-density polyethylene
HI	hazard index
JECSI	JE Compliance Services, Inc.
LBVI	least Bell’s vireo

LIST OF ACROYNMS AND ABBREVIATIONS (continued)

MBTA	Migratory Bird Treaty Act
MDAB	Mojave Desert Air Basin
MDAQMD	Mojave Desert Air Quality Management District
MGD	million gallons per day
MH	manhole
NAAQS	National Ambient Air Quality Standards
NEPA	National Environmental Policy Act
NESHAPS	National Emission Standards for Hazardous Air Pollutants
NFIP	National Flood Insurance Program
NOI	Notice of Intent
NPDES	National Pollutant Discharge Elimination System
OEHHA	State of California Office of Environmental Health Hazard Assessment
PA	Public Assistance Program
ppm	parts per million
PVC	polyvinyl chloride
RWMP	Regional Water Management Plan
RWQCB	Regional Water Quality Control Board
SAVI	South Apple Valley Interceptor
SBCFD	San Bernardino County Fire Department
SCE	Southern California Edison
SCH	State Clearinghouse
SCLA	Southern California Logistics Airport
SHPO	State Historic Preservation Office
SIP	state implementation plan
SoCAB	South Coast Air Basin
SWG	Southwest GAs
SWPPP	Stormwater Pollution Prevention Plan
SWRCB	State Water Resources Control Board
SWWF	Southwestern willow flycatcher
TBM	Tunnel Boring Machine
TDA	Tom Dodson & Associates
TDS	total dissolved solids
TPH	total petroleum hydrocarbons
UBC	Uniform Building Code
USFWS	U.S. Fish and Wildlife Services
VCP	vitrified clay pipe
VOC	volatile organic compounds
VVWRA	Victor Valley Wastewater Reclamation Authority
VWD	Victorville Water District
WRP	Water Reclamation Plant
WMP	Water Management Plan
WOUS	Waters of the United States

1 INTRODUCTION

The Victor Valley Wastewater Reclamation Authority (VVWRA) has applied for Federal financial assistance (Federal action) from the Department of Homeland Security's Federal Emergency Management Agency (FEMA) through the California Emergency Management Agency (CalEMA) to restore service provided by damaged wastewater conveyance facilities. Specifically, a main sewer interceptor line located under the Mojave River was damaged during recent winter storms. This natural disaster contributed to the presidential disaster declaration FEMA-1952-DR-CA: "Severe Winter Storms, Flooding, and Debris and Mud Flows" which occurred from December 17, 2010, to January 4, 2011. FEMA is proposing to provide funding for the project under disaster relief that was implemented in response to this presidential disaster declaration, FEMA-1952-DR-CA (declared January 26, 2011).

A significant storm event occurred in the Victor Valley subregion and San Bernardino County, beginning the week of December 19, 2010. As a result of the devastating rains, the VVWRA sustained damage to the sewer interceptor under the Mojave River, in a section of the river with extremely limited access known as the Upper Narrows. The sewer pipeline breach was discovered on December 29, 2010. VVWRA immediately began work to create an emergency sewer force main to bypass the breach in the damaged sewer interceptor, and divert the wastewater by constructing an emergency and temporary bypass pipeline and two booster pumping stations. Additionally, the force of the river flow resulting from the storm event was so great that the exposed manholes (MH) along the damaged sewer interceptor within the Mojave River (estimated to be between MH 5-1 to MH 5-8 which conveys flows from Hesperia and the City of Victorville known as Schedule V Pipeline and MH 1 to MH 4 which conveys flows from the Town of Apple Valley and portions of San Bernardino County known as the SAVI pipeline) became tilted, causing further damage to the pipeline and manholes. Sand, sediment and debris entered the pipeline at the ruptured areas and eventually cemented in-place naturally.

Copies of the Draft Environmental Assessment made available to view at Victor Valley Wastewater Reclamation Authority located at 15776 Main Street, Suite 3, Hesperia, CA 92345; Victorville City Library located at 15011 Circle Drive, Victorville, CA 92395, and Apple Valley Public Library located at 15001 Wakita Boulevard, Apple Valley, CA 92307. In addition, the environmental document is available online at http://fema-rix-ehp-documents@fema.dhs.gov

1.1 PROJECT AUTHORITY

It is under the authority of the Robert T. Stafford Disaster Relief and Emergency Assistance Act (42 U.S.C. 51521 et seq.) [Stafford Act] that Congress has determined "to provide an orderly and continuing means of assistance by the Federal Government to State and local governments in carrying out their responsibilities to alleviate the suffering and damage which results from disasters." This project has been initiated under the auspices of this Act and will be funded under the Public Assistance (PA) program under the Stafford Act. The purpose of the PA program is to provide Federal funding for repair, replacement or restoration of facilities and infrastructure damaged during a declared disaster.

FEMA has prepared this Environmental Assessment (EA) to evaluate the potential environmental, social and economic impacts of the identified project alternatives, including the No Action Alternative. This EA has been prepared in accordance with the Code of Federal Regulations (CFR) for the Federal Emergency Management Act (FEMA), 44 CFR, Part 10; section 102 of the National Environmental Policy Act (NEPA) of 1969, as amended; and regulations promulgated by the President's Council on Environmental Quality (CEQ) (40 CFR Part 1500-1508).

The EA process includes steps and procedures for the evaluation of potential environmental, social and economic impacts of the identified project alternatives. The potential impacts are evaluated according to their context and intensity, as defined in the CEQ regulations. The EA process also includes procedures for giving Federal, State and local agencies and the public opportunities to provide input on the Proposed Action and identified alternatives.

1.2 PROJECT LOCATION

The project alignment lies within a section of the Mojave River known as the Upper Narrows in the Victor Valley subregion, located in southwestern San Bernardino County, California. Refer to Figure 1: *Project Vicinity*, and Figure 2: *Site Location*. The initial break in the 36-inch vitrified clay pipe (VCP) occurred 640 feet downstream of the intersection of the Apple Valley sewer line with the main sewer line underneath the Mojave River. The damaged reach begins on the east side of the River channel in the vicinity of Desert Knolls Wash and the Lewis Learning Center, in the Town of Apple Valley. The damaged pipeline crosses the Mojave River from east to west and then follows the west side of the Mojave River channel through the Upper Narrows into the Old Town portion of the City of Victorville. It has been determined that the extent of the damaged section of the main sewer line lie between Manhole (MH) 5-1 to MH 5-8, and MH-1 to MH-4. Refer to Figure 3: *Damaged Section and New Pipeline Alignment.*

1.3 PURPOSE AND NEED

The need for the Proposed Action is to restore service provided by the damaged sewer interceptor line which is currently under emergency bypass. The purpose of the Proposed Action is to restore permanent infrastructure to transport the wastewater from the Town of Apple Valley to the regional Westside Water Reclamation Facility. One of the main objectives is to restore the pipeline in a protected manner to achieve greater public health safety for residents who are serviced by this sewer line, while protecting the waters of the Mojave River, community water supply, and the ecosystem from downstream pollution caused by potential sewer ruptures during future major flooding events.

The Victor Valley Wastewater Reclamation Authority (VVWRA) is a regional provider of wastewater collection, treatment and reclamation services with a service area encompassing approximately 211 square miles and treating up to approximately 14 million gallons per day (MGD). VVWRA currently serves a population of approximately 183,385[1] people via their member agencies which consist of the City of Victorville, the City of Hesperia, the Town of Apple Valley, and select portions of the County of San Bernardino, including County Service Area (CSA) 42 and CSA 64. Existing emergency sewage conveyance facilities installed as a temporary measure since the storms of December 2010 and January 2011 are inadequate for permanent use, partially due to their vulnerability to future flood damage. Therefore, action, in

[1] Sewerage Facilities Plan Update, Year 2005 Amendment, adopted August 1, 2005, Page 1-3.

this case restoring a permanent sewer line across the Mojave River, is needed to restore permanent regional wastewater conveyance facilities to replace those that were damaged during the disaster.

2 ALTERNATIVE ANALYSIS

This section describes two alternatives, as well as a No Action Alternative and alternatives considered but eliminated from further consideration, proposed by the Victor Valley Wastewater Reclamation Authority (VVWRA) and concurred with by FEMA to restore service caused by damage to the primary sewer interceptor line transporting wastewater from the Town of Apple Valley to the VVWRA Westside Water Reclamation Facility.

2.1 NO ACTION ALTERNATIVE

NEPA requires a project proponent to evaluate a No Action Alternative which proposes to maintain the status quo. The No Action Alternative provides a benchmark for evaluation of the other alternatives considered. The No Action Alternative states that there would be no further restoration of the sewer line. The current temporary repairs completed on the damaged sewer interceptor line would remain in place.

Under the No Action Alternative, existing sewer facilities would not be improved or replaced. Adverse impacts and potential hazards would continue to occur within the existing floodplain. Floodwaters would continue to periodically inundate the area, which could result in future damage to or failure of the temporary sewer infrastructure, which could in turn cause an interruption of sanitary services and deterioration of water quality and the ecosystem if additional untreated wastewater were to drain into the Mojave River due to a failure of the existing temporary sewer infrastructure.

2.2 ALTERNATIVE 1 (IN-KIND REPAIR)

Alternative 1 is the removal and replacement-in-kind of the existing damaged sewer line interceptor utilizing vitrified clay pipe (VCP). This alternative would replace about 4,541 feet of VCP and repair and reset 13 manholes to pre-disaster design, function and capacity.

Due to the geologic constraints of the bedrock which rises to, or near, the bottom of the Mojave River Channel at the project location, river water is constantly flowing at the Upper Narrows. In order to replace the existing damaged sewer line interceptor in the Mojave River Channel, the constantly flowing river water must be diverted and bypassed. This would provide construction access to excavate a trench, dewater the trench, shore and brace the trench, remove the existing damaged sewer interceptor line, construct the replacement-in-kind sewer interceptor line, and backfill the trench.

Construction within, and diversion of, the Mojave River, would necessitate treating, sampling and laboratory testing River water, relocating fish and wildlife including sensitive and listed species, and implementing all required on-site environmental mitigation, Best Management Practices (BMPs) and Stormwater Pollution Prevention Plans (SWPPPs). It is estimated that approximately 10 acres of River habitat disturbance would occur as a result of construction activity within the Mojave River to support Alternative 1.

Additionally, since construction associated with this alternative would require construction traffic to regularly cross the Burlington Northern Santa Fe (BNSF) railroad at unmarked locations that are not ordinary crossings, there would be a permit required from BNSF and a flagman at the railroad for safety. At a minimum, permits would also be required from the U.S. Army Corps of Engineers (Section 404), State Water Resources Control Board (SWRCB) and Regional Water Quality Control Board (RWQCB), and the California Department of Fish and Wildlife (CDFW) for Alternative 1, and it is probable that a Section 7 endangered species incidental take statement and a Section 10 incidental take permit from the U.S. Fish and Wildlife Service (USFWS) would be required for this alternative. This is because Alternative 1 would discharge fill into Waters of the United States and Waters of the State of California (Streambed Alteration Agreement).

Alternative 1 Implementation

The first action necessary to implement Alternative 1 is to construct the diversionary bypass channel. This would be done using a coffer dam that would be approximately 4,541-feet long, plus about 75-feet length for each end angled to the bank, for a total length of approximately 4,691 feet. The coffer dam would utilize 36-foot lengths of sheet piling with 24 feet driven into the ground and 12 feet exposed. Water would first be pumped out at a volume estimated to be about 1,307,808 cubic feet (cf) total, so that a pond liner can be installed. Pond liner would cover approximately 112,584 square feet (sf) of exposed sheet piling. After the pond liner has been installed, the ends of the coffer dam can be removed and driven into the other side of the coffer dam where the work would be performed, adding an additional approximate 150 sf of sheet piling. An additional estimated 1,327,608 cf of water would then be pumped out.

Construction equipment anticipated to be used to construct the River bypass includes a drill rig, bulldozer, and other earthmoving equipment. Based on original “as built drawings” the top of the sewer pipes varies, but is on average about 10 feet below the bottom of the riverbed.

Once the River bypass has been constructed, the existing pipe can be excavated. Backhoes would be used to dig beneath the riverbed to remove the material covering the pipeline, and remove the existing pipe, which would require trench excavation of approximately 11,300 cubic yards (cy) of material and stockpiling of this material. After the existing pipe has been removed, the new pipeline and manholes can then be installed. Once the new pipeline and manholes are installed, the trench would be backfilled and compacted with approximately 10,475 cy of dewatered material. Approximately 6 inches to 12 inches of topsoil would be placed on top of the fill. Following the completion of the pipeline and manhole installation and backfill from the trenching, the sheet piling used to construct the bypass and divert the river would then be removed, restoring the river flow.

Once construction is completed, the existing emergency temporary sewer by-pass force main consisting of overland pipelines, a bridge in the Mojave River, and two booster pumping stations at two separate sites would be taken off-line, and any solid waste would be removed and disposed of at an appropriately licensed disposal facility. The pumping equipment was purchased in April 2012 and it will either be retained or sold by VVWRA based on future need for this equipment.

It is estimated that construction of Alternative 1 would take 3-6 months to complete once initiated, and is anticipated to begin Spring 2013 and end in late summer 2013.

Site Access and Staging

Figure 3 shows the construction alignments and staging areas for Alternative 1.

Scope and Limits of Work

Table 2.2-1 below shows the scope and limits of work for Alternative 1.

Table 2.2-1
Scope and Limits of Work for Alternative 1

Description of Work	Pipe Type and Dimension	From	To	Units of Measurement – Linear Feet (LF), Vertical Linear Feet (VLF), Cubic Yards (CY)
Pipe installation	36” VCP	MH 5-1	MH 5-6	2,526 LF
Pipe installation	27” VCP	MH 5-6	MH 5-7	390 LF
Pipe installation	18” VCP	MH 5-7	MH 5-8	170 LF
Pipe installation	18” VCP	MH 1	MH 4	1,455 LF
Trench Excavation	36” VCP	MH 5-1	MH 5-6	6,876 CY
Trench Excavation	27” VCP	MH 5-6	MH 5-7	948 CY
Trench Excavation	18” VCP	MH 5-7	MH 5-8	364 CY
Trench Excavation	18” VCP	MH 1	MH 4	3,112 CY
Trench Backfill	36” VCP	MH 5-1	MH 5-6	6,215 CY
Trench Backfill	27” VCP	MH 5-6	MH 5-7	891 CY
Trench Backfill	18” VCP	MH 5-7	MH 5-8	853 CY
Trench Backfill	18” VCP	MH 1	MH 4	3,017 CY
Construct 9 new steel manholes	48” X 84” (tall)	MH 5-1	MH 5-8	N/A
Construct 4 new steel manholes	48” X 84” (tall)	MH 1	MH 4	N/A
Sheeting, shoring, bracing	N/A	Entire alignment		4,691 LF
River bypass	N/A	Entire alignment		4,541 LF
Abandon existing sewer in place	N/A	Entire alignment		To be abandoned in place
Remove existing temporary sewer bypass	N/A	Entire alignment		Approximately 2,000 feet in length
Remove existing pipe bridge	N/A	Entire alignment		Extends approximately 2,000 feet
Dewatering	N/A	Entire alignment		Extends approximately 1,800 feet
Temporary Fencing	N/A	Required at multiple staging locations		400 LF

Source: Tetra Tech

2.3 ALTERNATIVE 2 (REPLACEMENT BY TUNNELING)

Alternative 2 involves placing the new sewer line as deep as possible under the Mojave River and relocating that portion of the sewer line on the west side of the Mojave River out of the riverbed, and constructing it along the streets in the adjacent City of Victorville. The existing damaged interceptor would remain within the riverbed and become fish habitat. The exposed manholes would be closed in place or removed if possible, to limit the visual appearance of any remains of the pipeline. This alternative would use a combination of construction technologies to route flow through and around the Upper Narrows section of the Mojave River, including horizontal directional drilling (HDD), tunneling, jack and bore, and open trenching, and would install high-density polyethylene (HDPE)-type pipeline or other state-of-the-art pipeline material, rather than the same pipe type that is currently used for the sewer line, which is VCP.

Different from Alternative 1, Alternative 2 minimizes in-the-river surface disturbance and most of the new pipeline work would occur outside of any portions of the Mojave River Channel. Diversion of River water is not likely to be necessary, although the HDD and jack-and-bore pits may need to be dewatered. It is estimated that no jurisdictional areas of riparian River habitat would be disturbed as a result of construction activity within the Mojave River Channel. This can be compared to the estimated 10 acres of disturbance of the riparian habitat under Alternative 1.

Also different from Alternative 1, Alternative 2 would entail the excavation of a significant amount of soil material which would require disposition, either being stored on an adjacent site or hauled away.

Alternative 2 would minimize the work at the unmarked BNSF railroad crossings, but construction would still require a permit from BNSF and a flagman at the railroad for safety during the bore and jack operations. In contrast to Alternative 1, construction of Alternative 2 would not require permits from the Corps (Section 404), SWRCB) and RWQCB, and the CDFW. Consultation for listed species and species of environmental concern was initiated with the USFWS (or Service) and the Service responded on May 23, 2012 that "the proposed interceptor replacement project located along the Upper Narrows portion of the Mojave River in Victorville, San Bernardino County, California, may affect but is not likely to adversely affect the federally endangered least Bell's vireo (*Vireo bellii pusillus*).

<u>Alternative 2 Implementation</u>
As mentioned above, four different construction technologies would be required to construct Alternative 2: HDD; jack and bore; tunneling; and open trenching.

Horizontal directional drilling (HDD)
HDD is a trenchless method of installing underground infrastructure. HDD creates a bore underground and would facilitate placing the permanent pipeline below the Mojave Riverbed and a section of the BNSF railroad along a prescribed bore path, through which the pipeline is pulled. This approach reduces the above ground disturbance to areas at the entrance and exit HDD pit area and staging areas as compared to conventional trenching which would disturb the entire riverbed and BNSF railroad. A staging area is required for the HDD pit entrance location; another staging area is required for the HDD pit exit location. The excavated material would be exported offsite, and the bentonite slurry (driller's mud) must be recovered, processed and also hauled off-site for disposal. A portion of the material may be used to cover the staging area near the Lewis Learning Center to minimize potential for disturbing any cultural resources. Excess excavated material would be disposed of at an appropriately licensed disposal facility. Also there is a potential issue of "frack out" of bentonite whereby the bentonite could seep to the surface during drilling, reaming, and pipeline pulling operations, a possibility near the entrance and exit locations of the HDD operations. The potential for this to occur underneath the Mojave River bed would be minimized by placing the pipeline at a depth of 30+ feet, and by placing the entrance and exit portals a minimum distance exceeding 120 feet away from any sensitive habitat. An approved "frack out" management plan is required to be in place for implementation should such an event occur. The pipeline would be stored in 20 to 40 foot-lengths on the staging area at the Lewis Learning Center, and the lengths would be fused together at the Lewis Learning Center staging area to form one continuous pipeline prior to being fed underground by the HDD equipment. HDD is a continuous operation that would run 24 hours a day, 7 days a week, to complete the required tunneling. HDD would be employed for Reach I-A only, a distance of approximately 1,744 linear feet (LF) underneath the Mojave River.

Jack and Bore

Jack and bore drilling would be necessary for the portions of the pipeline being installed underneath the BNSF railroad. This method involves digging entrance and exit pits to the depth of the pipeline underground, shoring the walls of the pits, laying the boring machines within the pits, setting up tracks, inserting an auger in the casing, and allowing the machine to push the auger and casing into the ground simultaneously while the machine is turning a cutting head through the ground. The auger carries the soil back to the machine where the soil is removed from the pits. The material excavated from the jack and bore would be disposed of in an appropriately licensed facility. The pipeline would then be installed through the casing. Jack and bore is a continuous operation that would run 24 hours a day, 7 days a week, to complete the required drilling. Jack and bore would be employed for Reach I-B (approximately 95 LF of jack and bore) at the Kemper Campbell Ranch crossing and Reach IV (approximately 140 LF of jack and bore) at 7th Street. Refer to Figure 5. For Reach 1-B, there would be approximately 159 LF of open trench construction to connect to Reach 1-A and Reach II, and approximately 50 LF of open trench construction to connect to existing sewer at MH 5-8. Trenching activities are proposed to be carefully monitored by the project archaeological monitor and Native American monitor(s). The trenching is expected to require about two weeks once initiated.

Tunneling

Tunneling is a trenchless method of installing underground infrastructure and in this case, the main sewer interceptor pipeline. Some trenching is necessary for the portions of the pipeline being installed where Reach II and Reach III connect. The trenching will occur where the HDD-installed pipeline and the first jack and bore pipeline connect, in C Street near the intersection of 8th Street in Old Town Victorville. The tunneling method of construction would involve either the use of a Tunneling Boring Machine (TBM) and Excavator Shield or conventional rib and lagging, to create a small-diameter tunnel through which the sewer pipeline would be installed. A staging area is required for the entrance portal, and for the exit portal. The sides of the portals would be shored. A ramp would be excavated that leads down to the portals in order to remove the excavated soils and to facilitate tunneling operations, or materials and equipment would enter/remove the portals via assistance with a crane or other heavy equipment such as loaders and backhoes. The pipeline would be stored at the staging area. Pipe segments would be joined in the entrance portal as the pipe is placed and pushed through the tunnel. Tunneling using a TBM is a continuous operation that would operate 24 hours a day, 7 days a week, to complete the required tunneling to lower the risk of having the TBM become stuck and requiring recovery from above. Tunneling would be employed for Reach II only, a distance of approximately 2,634 linear feet underneath the existing Kemper Campbell Ranch land and C Street. Refer to Figure 4.

Conventional Open Trenching

This method involves conventional open trench excavation using typical trenching equipment such as excavators, drill rigs, backhoes, loaders, and dump trucks. Limited trenching associated with the other construction technologies is discussed in the preceding discussions. Trenches would be dug up to an approximate depth of 30 to 40 feet in these areas, utilizing a sliding steel box or sheet shoring for trench wall stabilization. The pipeline and manholes would be installed directly in the trenches, and trenches would be backfilled and the asphalt street surfaces repaired. Open trenching would be employed for Reach III (approximately 1,067 LF) and Reach V (approximately 195 LF). Refer to Figure 4.

Approximately 53 LF of open trench construction would be done to connect to Reach I-B and Reach II. The final connection back to the existing SAVI sewer line interceptor at the emergency booster by-pass pumping station would be made via open trench construction to MH-4

from the HDD exit portal at the Lewis Learning Center, a length of approximately 125 LF. Refer to Figure 4. In addition, approximately 168 LF of open trench construction will be required to connect Reach I-A and Reach I-B.

Descriptions of the type of construction proposed for each Reach are provided below:

- *Reach I-A – HDD Siphon Under River and Railroad (Points A to C)* - The primary wastewater flow transported in the sewer line is generated on the east side of the Mojave River from the Town of Apple Valley. This flow would be siphoned underneath the Mojave River (from east to west); the siphon would be constructed using HDD, and siphon manhole structures would be constructed at both ends of the siphon. This would involve approximately 2,350 LF of HDD with an inlet and outlet siphon structure estimated to be 6-feet ID manhole. The HDD entrance appears to be within the rive-rbed, but is actually located on the edge of a desert wash on the extreme eastern edge of the Mojave River Channel outside of areas with perennial flow. Since only the entrance area will affect the ground surface, environmental impacts to surface areas is substantially minimized. The exit pit for the HDD would be in an agricultural field outside of the River channel, and would join Reach 1-B (discussed below) with one manhole with a diameter of 4 feet. Refer to Figure 5.

- *Reach I-B – Bore & Jack under Railroad (connect Upstream existing Schedule V to Tunnel – Points B to C)* - The second source of wastewater flow that will be transported in the sewer line connects to the sewer line on the west side of the Mojave River and is generated from Hesperia, east of the BNSF railroad. A gravity sewer pipe would be bore and jacked under the railroad (from east to west) up to the siphon manhole structure on the west side of the River, where the two flows (from Reach 1-A and Reach 1-B) combine into one flow – Point C. This would involve bore and jack a 60-inch diameter (0.781-inch thick casing pipe) approximately 222 LF underneath the railroad. An entrance and exit bore and jack pit would also needed. The entrance pit is on the edge of the riverbed, and the exit pit is well outside the riverbed as it joins Reach 1-A above with 3 manholes with a diameter of 7 feet and one manhole with a diameter of 8 feet. Refer to Figure 5.

- *Reach II – Tunnel through Mojave Narrows (Points C to D)* - A gravity sewer would be tunneled from the siphon manhole structure on the west side of the river to a location in C Street, between Hesperia Road and 8th Street. The 66-inch tunnel including casing and grout (if needed) would run for approximately 2,632 LF and contain the 48-inch OD (42.01" ID) HDPE pipeline, with one manhole with a diameter of 7 feet. Refer to Figure 5.

- *Reach III – Open Trench (Points D to E)* - From the end of the tunnel, a cut and cover gravity sewer would be constructed within Victorville's city streets in open trench (30' to 40' of cover over pipe), from the end of the tunnel to a location beyond D Street, in line with 8th Street. There would be approximately 1,067 LF of 42.01" (48" OD) HDPE, approximately 7,719 CY of trench excavation and backfill – 30-feet to 40-feet deep, approximately 62,240 SF of sheeting, shoring and bracing, and 5 manholes with a diameter of 7 feet. Refer to Figure 5.

- *Reach IV – Bore & Jack Under Railroad (Points E to F)* - From this point, to get back to the cut and cover, the pipeline would be bore and jacked again, under the railroad (from

south to north) approximately 126 LF of bore and jack (60" diameter, 0.781" thick casing) housing 42.01" (48" OD) HDPE, bore and jack pits, one on each side of the railroad, and 2 manholes with a diameter of 7 feet. Refer to Figure 5.

- *Reach V – Open Trench (Connect to existing Downstream Schedule V - Point F to G)* - A final stretch of open trench would connect the terminus of the bore and jack back to the existing pipeline downstream Schedule V at Point G. This would be approximately 195 LF of open trench with 42.01" ID (48" OD) HDPE, approximately 934 CY of excavation and backfill, with one manhole with a diameter of 7 feet. Refer to Figure 5.

All excavated material would be properly disposed of at an appropriately licensed site or facility. Once construction is completed, the existing emergency temporary sewer by-pass force main consisting of overland pipelines, a bridge in the Mojave River, and two booster pumping stations at two separate sites would be taken off-line, and would be removed and disposed of at a licensed facility. The pumping equipment was purchased in April 2012 and will be retained or sold as needed.

It is estimated that construction of Alternative 2 would take 9 months to complete.

Site Access and Staging

Figures 4 and 5 show the construction alignment for each Reach and the staging areas for Alternative 2.

Scope and Limits of Work

Table 2.3-1 below shows the scope and limits of work for Alternative 2.

Table 2.3-1
Scope and Limits of Work for Alternative 2

Description of Work	Dimensions	Location	Units of Measurement – Linear Feet (LF), Vertical Linear Feet (VLF), Square Feet (SF) Cubic Yards (CY)
Horizontal directional drilling (HDD) one hole	N/A	Reach I-A	1,744 LF
Siphon inlet structure	6’0” ID MH	Reach I-A	12 VLF
Siphon outlet structure	6’0” ID MH	Reach I-A	20 VLF
Bore and jack	60” diameter, 0.781” casing	Reach I-B	94 LF
Install pipeline	42.01” (48” OD) HDPE	Reach I-B	306 LF
Bore and jack pit	N/A	Reach I-B	N/A
Tunnel	66” diameter, 0.750” casing, grout and backfill	Reach II	2,624 LF
Install pipeline	42.01” (48” OD) HDPE	Reach II	2,664 LF
Tunneling shafts, one on each side of tunnel	N/A	Reach II	N/A
Install pipeline	42.01” (48” OD) HDPE	Reach III	1,067 LF
Trench excavation	19-31’ deep, 48” OD HDPE	Reach III	7,719 CY
Trench backfill	19-31’ deep, 48” OD HDPE	Reach III	7,247 CY
Sheeting, shoring, bracing	N/A	Reach III	62,240 SF
Manholes (5)	7’-0” ID MH	Reach III	138 VLF
Bore and jack	60” diameter, 0.781” casing	Reach IV	126 LF
Install pipeline	42.01” (48” OD) HDPE	Reach IV	143 LF
Manholes (2)	7’-0” ID MH	Reach IV	37 VLF
Bore and jack pit	N/A	Reach IV	N/A

Description of Work	Dimensions	Location	Units of Measurement – Linear Feet (LF), Vertical Linear Feet (VLF), Square Feet (SF) Cubic Yards (CY)
Install pipeline	42.01" (48" OD) HDPE	Reach V	195 LF
Trench excavation	25' deep, 48" OD HDPE	Reach V	934 CY
Trench backfill	25' deep, 48" OD HDPE	Reach V	843 CY
Trench Box	N/A	Reach V	N/A
Manholes (1)	7'-0" ID MH	Reach V	15 VLF
Remove existing temporary sewer bypass	N/A	Entire alignment	Approximately 2,000 feet in length
Remove existing pipe bridge	N/A	Entire alignment	Extends approximately 2,000 feet
Dewatering	N/A	Entire alignment in the Mojave River	Extends approximately 2,000 feet
Temporary Fencing	N/A	Required at portal and staging areas.	1,000 LF

Source: Tetra Tech

2.4 ALTERNATIVES CONSIDERED BUT ELIMINATED FROM FURTHER DISCUSSION

Lining of Existing Upper Narrows Section

As a result of the heavy river flows due to the storm, the existing Mojave River gravity sewer interceptor was damaged beyond repair and must be replaced between Manhole (MH) 5-1 to MH 5-8 on the Schedule V reach and MH 1 to MH 4 on the SAVI reach. Manhole locations are shown on the engineering drawings provided in Appendix 1 of this document. Reconnaissance of the damage was performed via pipeline cleaning and sonar; this confirmed which portions of pipeline were damaged beyond repair and which segments must be replaced in order to restore the function of the existing gravity sewer line interceptor.

This alternative involves repair by cleaning and lining of the existing VCP. This alternative included spot repairs of the existing ruptured area and the installation of Cured in Place Pipe (CIPP) or slip lining of the pipeline. However, this alternative was eliminated from further discussion because the existing VCP pipeline is damaged beyond repair and would not facilitate installation of the CIPP or slip lining of the pipeline. Therefore, further discussion of this alternative will not be included in this EA.

Remove and Replace, Install with Concrete Piers

This alternative is similar to Alternative 1 and involves the removal and replacement of the existing interceptor and concrete encasement of the pipeline which would be placed on top of concrete piers with steel straps over the pipe. This alternative offers hazard mitigation in the form of the concrete encasement around the pipeline spanning in-between the concrete piers, drilled into the river bedrock below. The cost of this alternative, however, was more than Alternative 2, and still left the sewer interceptor on the ground surface within the Mojave River Channel. However, this alternative was eliminated due to the potential additional adverse effects of this alternative on the River channel, which are addressed as part of the evaluation under Alternative 1, and because it was more costly than Alternative 2. Therefore, further discussion of this alternative will not be included in this EA.

3 AFFECTED ENVIRONMENT AND ENVIRONMENTAL CONSEQUENCES

3.1 PHYSICAL ENVIRONMENT

3.1.1 GEOLOGY, SEISMICITY AND SOILS

Affected Environment
According to the County of San Bernardino *General Plan,* City of Victorville *General Plan* and the Town of Apple Valley *General Plan,* there are several faults within the region that have the potential to create strong seismic ground shaking at the project site. The major active faults that are closest to the project site include the North Frontal Fault, Helendale Fault, San Andreas Fault, the Glen Helen Fault, and the Lytle Creek Fault. The actual fault lines are located more than 15 miles from the project area. Refer to Figure 3.1.1-1. The project area has an active seismic ground shaking history but there are no active faults (Alquist-Priolo Special Study Fault Zones) located within or near the pipeline alignment. Thus, there is no potential for ground rupture within the project alignment.

The geology of the proposed sewer line alignment consists of three components: the young alluvial deposits of the Mojave River; the igneous quartz monzonite bedrock beneath the river bed and the outcrops of the Upper Narrows; and the Pleistocene-age sediments of the Victorville Fan, which include older sediments that are partially consolidated. Alternative 1 would cross the young alluvium found in the Mojave River Channel in a trench and traverse through the fluvial (river laid) sediment and the Victorville Fan sediments on the west side of the River channel. The HDD component of the project would traverse the Mojave River alluvial deposits along the bedrock contact beneath the channel; the tunnel would pass through Victorville Fan and possibly the igneous quartz material; and the trenching and limited jack and bore areas would occur within existing roadways that lay on top of the Victorville Fan.

The primary soil types affected by the project would be small areas of fluvents/psamments (unconsolidated young alluvial sediment) that occur in or adjacent to the Mojave River and the disturbed soils in the downtown Victorville area beneath existing roadways. Within the channel future erosion hazards can occur when large flows result from major regional rainfall events (storms producing several inches of rain during one storm event). Flows up to 27,000 cubic feet per second are possible downstream from the Mojave River Forks Dam during the 100-year storm.

No Action Alternative
The No Action Alternative would not have any direct impact on geology or soils. However, under this alternative without implementation of permanent sewer repairs the temporarily repaired line would remain in place. Retention of the existing temporary facilities would not adversely affect any geology resources or expose these facilities to any different geology effects. No greater exposure to seismic hazards would result from implementing the No Action Alternative because the facilities already exist and are exposed to these seismic hazards, but the existing facilities would not receive the protection from geologic hazards that affect the project alignment. All exposure to hazards, such as seismic ground shaking, erosion and liquefaction (loose, coarse

sediment that loses structural integrity during seismic ground shaking), would continue to exist and these hazards could expose the existing temporary facilities to failure due to these hazards. Compared to the preferred alternative, Alternative 2, this exposure to hazards would be greater and could result in failure of the temporary facilities and the related violation of waste discharge permits, substantial degradation of water quality, and damage to the biological resources that occur within the Mojave River.

Alternative 1: In-Kind Repair

Under this alternative construction activities within the Mojave River channel would need to be implemented similar to that which occurred when the temporary bypass was installed. These activities would disturb the alluvial deposits in the channel and a modest amount of alluvium (11,300 CY) would be removed from the River channel. The new sewer line would be exposed to regional seismic activity, including ground shaking and liquefaction, and during a future regional earthquake the sewer line could fail again and result in a secondary impact, release of raw sewage into the surface and groundwater that occurs within this area of the River channel and downstream.

If the new sewer line is installed within the same alignment as the original pipeline, the potential for River erosion to damage pipeline would continue to exist, similar to the potential impact under the No Project Alternative. This could include loss of the pipeline during future high flood flows equivalent to or larger than that experienced during the December 2010 storms that damaged the original sewer line across the channel. Although the erosion issue overlaps with hydrology issues, the erosion impact is also considered a geologic hazard and is therefore considered in this section of the EA.

No other substantial geology or soil impacts would result from implementing this alternative.

Alternative 2: Replacement by Tunneling

This alternative would isolate that portion of the sewer pipeline that traverses the Mojave River channel from future erosion damage from flows in the River because it would place the sewer line so deep that flood scour erosion in the channel would not be able to expose the new sewer line to erosive scour forces and damage from future flood flows within the River channel. The HDD and tunneling activities would remove a substantial volume of material from the geologic formations through which it passes (assumed to be the River alluvium, some area of igneous rock and some area of the Victorville Fan). The excavated material from the HDD, tunneling activities and open trench activities would be hauled away and disposed of at an appropriately licensed facility or if uncontaminated the material may be used as fill at nearby sites.

No native surface soils would be disturbed by implementing this alternative because all locations where the surface would be disturbed are previously disturbed by engineered excavation or fill activities, including the staging areas which have been disturbed by previous pipeline installation activities or farming activities. As a result, no substantial effect on any of the existing geologic formations or soils would result from this activity.

Liquefaction hazards in the Mojave River channel would be avoided by the proposed HDD installation of the regional sewer pipeline because the new pipeline would be installed on the bottom of the channel. Further, liquefaction hazards would be minimized within both the tunnel and the open trench segments of the project due to the lack of groundwater within these two reaches of the project and due to the fact that no fault rupture would occur within the project area. Based on incorporation of design measure to protect the pipelines in the tunnels and the trenched locations, regional seismic groundshaking would not have the potential to cause the

new sewer line to rupture and cause major water quality degradation of either surface water or groundwater.

3.1.2 WATER RESOURCES AND WATER QUALITY

Affected Environment

The project area is located within the Alto Subbasin of the Mojave River Basin. The Mojave Water Agency manages the groundwater resources within the Mojave River Basin and Figure 3.1.2-1 shows the location of the Mojave Water Agency's service area. Figure 3.1.2-2 shows the location of the Alto Subbasin, which includes the project area located along the Mojave River between the Town of Apple Valley and the City of Victorville. All potable water supply is pumped from the Alto Subbasin of the Mojave River Groundwater Basin. Figure 3.1.2-3 shows the hydrologic setting of the region, including the Mojave River Floodplain Aquifer and the Mojave River Regional Aquifer.

The Clean Water Act of 1977 (CWA) (33 U.S.C. §§ 1251 et seq. [2010]) established a mechanism for regulating discharges of pollutants into waters of the United States (WOUS) and also established quality standards for surface waters. Under Section 10 of the Rivers and Harbors Appropriation Act of 1899 (33 U.S.C. § 403 [2010]) and Section 404 of the CWA (33 U.S.C. § 1344), a permit must be obtained from the Corps prior to discharging dredged or fill materials into WOUS unless the activity is exempt. Section 401 of the CWA (33 U.S.C. § 1341) requires certification that any activity authorized under Section 404 of the CWA is in compliance with State water quality standards, effluent limits, and other applicable State laws. The project area is located within and adjacent to the Mojave River, which is considered a WOUS under the jurisdiction of the USACE.

As summarized in the project description, the proposed project is the replacement of a temporary sewer main that was installed when the December 2010 floods in the Mojave River irreversibly damaged portions of the previous sewer main that transported collected wastewater from the Town of Apple Valley across the Mojave River and fatally damaged a portion of the sewer main carrying the combined wastewater from Apple Valley and areas upstream (cities of Hesperia and Victorville) on the edge of the River to a point downstream of the Upper Narrows. This sewer main represents the existing environmental condition that serves as an essential component of the VVWRA wastewater collection system and its replacement in a protected location is essential to preventing future discharges of raw sewage and the related violations of waste discharge requirements and water quality standards. From this perspective once the proposed project is completed and the sewer pipeline is operational the ability to convey wastewater safely represents a benefit from a water quality standpoint.

The following description of the Mojave River Hydrology is abstracted from the Cumulative Impact Analysis, Final Draft, September 2010, Larry Walker Associates, Inc. (CIA). It provides basic information regarding the background hydrology conditions affecting the new sewer line alignment.

The Mojave River Watershed encompasses approximately 5000 square miles and is located entirely within San Bernardino County (NRCS Calwater). The watershed includes the cities and towns of Victorville, Hesperia, Apple Valley, Adelanto, Hinkley and Barstow. The Mojave River begins in the San Bernardino Mountains and flows northeast through the Victor Valley until it ends at Silver Dry Lake near Baker, covering a distance of approximately 120 miles. The Mojave River has two perennial tributaries which are both located in the San Bernardino Mountains, Deep Creek and the West Fork of the Mojave River. These tributaries converge at

the Forks (Mojave Water Agency, 2004) upstream of the Mojave Forks Dam (Maxwell). The river downstream of the dam is composed of both surface and subsurface flows, though is typically dry in most locations. The exceptions to this occur during flooding due to intense storm events, or where subsurface geologic features force the water to the surface (DWR, 2004), and downstream of the VVWRA discharge. The river is perennial in the vicinity of the Upper and Lower Narrows (approximately four miles upstream of the VVWRA Westside Regional WRP), in the section immediately downstream of VVWRA's regional treatment plant, and in Afton Canyon near Barstow (Mojave Water Agency, 2004). The River is typically dry upstream of VVWRA's discharge between the Lower Narrows and VVWRA. The average annual discharge of total flows at Lower Narrows for the period from 1931 to 2001 was 52,400 acre-feet (Mojave Water Agency, 2004).

Roughly 90 percent of surface flows entering the Mojave River Basin come from runoff in the mountains. The annual average precipitation in the San Bernardino Mountains is 42 inches, whereas the average annual precipitation in the rest of the watershed rarely exceeds 6 inches. The most arid locations in the watershed, such as Afton Canyon, receive less than 4 inches of rain annually (Maxwell). The majority of the surface flows percolate into the groundwater basin (DWR, 2004).

The Upper Mojave River Valley Groundwater Basin

The Upper Mojave River Valley Groundwater Basin underlies an elongated north-south valley in which the Mojave River intermittently flows. The basin covers a surface area of approximately 413,000 acres and the average effective thickness of the basin is 300 feet (DWR, 2004). The groundwater basin is bounded on the north by a roughly east-west line between basement rock outcrops in the Shadow Mountains and outcrops near Helendale. The basin is bounded on the south by the contact between Quaternary sedimentary deposits and unconsolidated basement rocks of the San Bernardino Mountains. The western boundary is a surface drainage divide between the Mojave and the El Mirage Valley Basin, as well as a contact between alluvium and basement rocks that form the Shadow Mountains. The Helendale fault to the southeast and the basement rock outcrops in the mountains surrounding Apple Valley make up the eastern boundary (DWR, 2004). The larger Mojave River Basin is considered a closed basin (Mojave Water Agency, 2004).

Natural recharge of the basin comes from direct precipitation and surface flow and underflow from the Mojave River. A large contribution to the basin occurs when the Mojave River is flowing, but this is a sporadic event. Treated wastewater effluent, septic tank effluent, fish hatchery effluent, and irrigation waters also percolate and enter the groundwater basin.

Figures 3.2.1-1 through 3.2.1-3 illustrate the Mojave Water Agency boundaries, Mojave River Groundwater Basin and Subbasins and the major hydrologic features of this basin. Regarding groundwater resources of the project area, the Alto Subbasin is in overdraft (more water being extracted than recharged over a given period) due to groundwater extractions associated with water supply within the Alto Subbasin. Groundwater away from the Mojave River floodplain is typically more than 100 feet below the ground surface, but in the floodplain the groundwater within the River channel is forced to the surface due bedrock in the River channel just downstream from the project's eastern terminus at the Lewis Learning Center.

The following water quality information is brought forward from Mojave Water Agency's Regional Water Management Plan (RWMP) and Victor Valley Wastewater Reclamation Authority's Final EIR for the Town of Apple Valley wastewater Reclamation Plant, City of Hesperia Wastewater Reclamation Plant, and Related Facilities. The text on "Water Quality"

identifies several water quality "issues" that include the following potential contaminants in groundwater: arsenic, nitrates, iron, manganese, Chromium VI, total dissolved solids (TDS), total petroleum hydrocarbons (TPH), and volatile organic compounds (VOC). A final water quality issue identified in the RWMP is the accumulation of salt in the groundwater basins because, as closed basins, "the salt contained in imported reclaimed wastewater and State Water Project supplies are mostly not removed from the basin."

Certain water quality parameters are characterized in the RWMP. These are shown on Figure 4-14 of the RWMP to Figure 4-19 of the RWMP, included in this document as Figures 3.1.2-4 through 3.1.2-9. Utilization of a single value to characterize the water quality of a whole subbasin is problematic, but it does provide a general background value for comparison with other data in the record. For Total Dissolved Solids (TDS) the background value for the Alto Subbasin is estimated to be approximately 281 parts per million (ppm). This TDS concentration is well below the primary drinking water quality standard of 500 ppm established by the California Department of Public Health (DPH). Water quality values for nitrate, fluoride and other essential water quality parameters typically meet drinking water quality values as shown on Figure 3.1.2-4 through 3.1.2-9

Surface water quality of the River at this location is comparable in TDS and nitrates to the local groundwater.

No Action Alternative

Under the No Action Alternative, no permanent pipeline improvements would be made, and VVWRA would continue to operate the temporary Upper Narrows sewer pipeline with the risk that rupture could occur again during future flood events. This above ground pipeline would be subject to the surface flow in the River, which could reach levels sufficient to damage and/or wash away the temporary sewer bypass. This exposure to damage from future surface flow could result in rupture and release of raw wastewater. Such wastewater contains high concentrations of TDS, bacteria, and other contaminants that would substantially degrade surface water quality downstream of the bypass and ultimately could also contaminate at least the near surface groundwater aquifer in the River, termed the "Mojave River Floodplain Aquifer" on Figure 3.1.2-3. Therefore, the No Action Alternative could have major, long-term, direct impacts on water resources and water quality. The No Action Alternative does not require any regulatory permits.

Alternative 1: In-Kind Repair

In kind repair would result in the whole sewer line being reinstalled within the Mojave River channel as shown on Figure 3. There are two potential types of adverse effects that would be associated with Alternative 1. First, construction activities within the Mojave River channel would require extensive disruption of surface flows during construction and the dewatering of the construction trench of groundwater seeping into the trench. Second, along its whole length the in-kind replacement pipeline would still be vulnerable to future surface runoff floods and associated erosion and damage and destruction of the pipeline. Although BMPs could substantially reduce downstream water quality degradation during construction, such measures are not perfect, and some degradation of the water discharged from the construction area would occur. Examples of the type of degradation include: increase in total suspended solids; increase in total dissolved solids; release of nutrients trapped by the vegetation that would have to be removed; and discharge of organic matter from removal of vegetation.

Similar to the existing temporary bypass, this alternative would leave the new pipeline vulnerable to future erosive flows in the Mojave River and subsequent damage and rupturing of

the Alternative 1 sewer pipeline. This would result in the same water quality degradation potential due to pipeline rupture described for the No Project Alternative. Although it would take an extraordinary event to expose and damage an in-kind pipeline placed in a trench across the Mojave River, this alternative would leave the sewer line vulnerable to the same hazards to which the failed pipeline was exposed. Thus, the in-kind alternative would result in the same water quality hazards as the original sewer line across the Mojave and it would also create additional potential for water quality degradation during construction of the new sewer line using trenching techniques along the whole of the alignment shown on Figure 3.

Alternative 1 would require the following regulatory permits be acquired prior to initiating construction: Section 404 Permit from the Corps of Engineers for trenching across the Mojave River; Section 401 Certification from the Regional Board for trenching across the Mojave River; Streambed Alteration Agreement (1602) from the California Department of Fish and Wildlife for trenching across the Mojave River; Section 7 Incidental Take Permit from the U.S. Fish and Wildlife Service for destruction of critical habitat and possible take of listed bird species; and General Construction Permit under the National Pollutant Discharge Elimination System (NPDES) for disturbance of more than one acre of land.

Alternative 2: Replacement by Tunneling

The tunneling alternative eliminates most of the potential adverse water quality impacts both from trench construction and potential future exposure of the pipeline to erosion hazards in a tunnel beneath the River channel. By installing the HDD reach of the project within a tunnel beneath the maximum scour depth of the surface flows in the River, the potential for erosive forces of the future surface flows to harm the new sewer line would be reduced to the extent feasible within the Mojave River channel. Also by boring beneath the River channel, all of the potential direct degradation for surface water during construction would be substantially minimized. The HDD pits and staging areas pose a limited hazard for water quality degradation, but these limited areas will control potential for surface water quality degradation through implementation of best management practices. It is also expected that during the HDD of the bore, some groundwater would be captured by the HDD process and would have to be treated and released by discharge into the existing temporary sewer for treatment at the Westside WRP. Without substantial quantities of sediment or organic matter that occurs on the bed of the River channel, the treatment process for groundwater entering the HDD tunnel can be simplified and water quality better protected.

During the HDD construction activities a potential does exist for a “frack out” (accidental release of the material from the tunnel) release of tunneling material, such as bentonite clay. Thus, it will be necessary to prepare a frack out response plan to contain any accidental release of drilling fluids and to reseal the tunnel if a frack out occurs. Mitigation is provided below to address this issue.

Construction activities on that portion of the proposed sewer line alignment outside of the Mojave River channel, including the tunneling, jack and bore and the trenching activities and reaches, would generate the potential for water quality degradation from construction activities. An area greater than 1 acre of construction disturbance would occur at the staging areas and at that segment of the project that would trenched. As required by current NPDES regulations, non-point source water quality degradation must be controlled through the implementation of a SWPPP. No other regulatory permits would be required to construction Alternative 2. To ensure that construction stormwater and water produced from dewatering activities do not degrade water quality downstream of such releases the following measures to minimize water quality degradation during project construction would be implemented.

3.1.2-1 ***VVWRA shall require that the construction contractor prepare and implement a Storm Water Pollution Prevention Plan (SWPPP) which specifies Best Management Practices (BMPs) that will prevent all construction pollutants from contacting stormwater and with the intent of keeping all products of erosion from moving offsite into receiving waters. The SWPPP shall include a Spill Prevention and Cleanup Plan that identifies the methods of containing, cleanup, transport and proper disposal of hazardous chemicals or materials accidentally released during construction activities that are compatible with applicable laws and regulations. BMPs to be implemented in the SWPPP may include but not be limited to***

- ***the use of silt fences;***
- ***The use of temporary stormwater desilting or retention basins;***
- ***The use of water bars to reduce the velocity of stormwater runoff so that sediment is not transported offsite;***
- ***The use of wheel washers on construction equipment leaving the site;***
- ***The washing of silt from public roads at the access point to the site to prevent the tracking of silt and other pollutants from the site onto public roads;***
- ***The storage of excavated material shall be kept to the minimum necessary to efficiently perform the construction activities required. Excavated or stockpiled material shall not be stored in water courses or other areas subject to the flow of surface water; and***
- ***Where feasible, stockpiled material shall be covered with water proof material during rain events to control erosion of soil from the stockpiles.***

3.1.2-1 ***VVWRA shall require that the construction contractor prepare a "frack out" response plan that will identify specific methods for determining a frack out has occurred; the methods to contain any materials released into the environment; the methods to repair the frack out location; and the remediation measures required to clean-up any areas of the environment contaminated by frack out material.***

3.1.3 FLOODPLAIN MANAGEMENT – EXECUTIVE ORDER 11988

Affected Environment

A floodplain is defined as a low plain area near a water source that is prone to periodic flooding. Two floodplains are typically defined, 100-year floodplain and 500-year floodplain. A 100-year floodplain is defined as an area that is prone to flooding with a one percent chance of flood occurrence any given year. A 500-year floodplain is an area that has 0.2 percent chance of flood occurrence any given year. Flood zones are defined by FEMA as zones of flood risk. These are identified on FIRMs which have been created for floodplain management and flood insurance purposes (National Flood Insurance Program, NFIP).

Executive Order (EO) 11988 requires federal agencies to avoid, to the extent possible, the short- and long-term adverse impacts associated with the occupancy and modification of floodplains. If there is no practicable alternative to undertaking an action in a floodplain, any potential adverse impacts must be mitigated. FEMA's regulations for complying with EO 11988 are found in 44 CFR Part 9.

Surface flows are characterized in the FEMA Flood Insurance Rate Map (FIRM) panel for the project area shows the Mojave River channel within the 100-year flood hazard area. Refer to Appendix 2, FIRM Panel 5820, Map #06071C56820H, Revised August 28, 2008. Also, the area at the end of 7th Street adjacent to the Mojave River channel is within the 100-year flood hazard area.

According to the FIRM, Community Panel Number 5820 (refer to Appendix 2 of this document), the project area is located within Zones A, AE, X. These zone designations are defined in Appendix 2, but in summary Zone X is an area with no chance of flooding; Zone AE is a

floodway which is routinely flooded; and Zone A is the area subject to flooding during a 100-year storm (a one percent chance of flooding in any given year).

When projects are located within a flood zone and meet other pertinent criteria, FEMA applies the Eight-Step Decision-Making Process to ensure that it funds projects consistent with EOs 11988 and 11990. EO11990 establishes federal policy for protection of wetlands. Extensive wetland/riparian habitat occurs within the Mojave River channel which is described in the Biological Assessment, which is Appendix 3 of this document. The NEPA compliance process involves essentially the same basic decision-making process to meet its objectives as the Eight-Step Decision-Making Process. Therefore, the FEMA Eight-Step Decision-Making Process has been applied through implementation of the NEPA process for this project. In compliance with EO 11988, if there is no practicable alternative to undertaking an action in a floodplain, any potential adverse impacts must be mitigated. In the evaluation that follows, the Eight-Step Process is applied to all three projects because all three alternative projects have reaches that are located within the Mojave River channel.

Impact Evaluation

FEMA has an Eight-Step Decision-Making Process for the Proposed Action, in compliance with EO 11988 (Floodplain Management), EO 11990 (Wetland Protection), and 44 CFR Part 9 (Flood Management and Protection of Wetlands). Fundamentally, the pipeline must cross the Mojave River to gain access to the Regional Water Reclamation Plant (WRP); therefore, it is essential that the Town of Apple Valley regional sewer cross the Mojave River channel and the location selected minimizes the cost of delivering the wastewater to the WRP.

Refer to the discussion in item 1 above which characterizes the direct and indirect effects of all three alternatives in the Mojave River channel.

No Action Alternative

The three alternative pipeline alignments would be located within the Mojave River channel which consists of a 100-year floodplain and riparian, wetland and aquatic habitat within the project alignment. The sewer pipeline alignments would affect the wetlands and be affected by flood hazards in different ways. The existing temporary sewer pipeline (Alternative 1) has already had an impact on the wetlands and would be exposed to future flood hazards with potential catastrophic damage. The two alternatives (No Project and In-Kind Replacement) would result in continued exposure to flood hazards and would result in some damage to the wetlands within the Mojave River channel.

In summary, the temporary emergency repairs have added more structures to channel surfaces in the Mojave River floodplain. The No Action Alternative would leave the temporary replacement sewer line within the Mojave River floodplain and exposed to future damage and loss due to flows within the River. Additional repairs to the sewer line would not take place and the potential for contamination of the Mojave River would remain. Floodplains would be directly and indirectly impacted by wastewater if temporary repairs failed or the sewer line became damaged by future flood flows.

Alternative 1: In-Kind Repair

In summary, this alternative evaluated the effects of replacing the irreversibly damaged sewer line by installing it at the same location and in the same manner (trenching) as it existed before the December 2010 flood flows in the Mojave River damaged much of the sewer line. The installation of the sewer line in a manner consistent with the original line would result in substantial temporary damage and loss of riparian, aquatic and wetland habitat and continued

exposure to the flood hazards within the Mojave River. Alternative 2 would require trenching activities that would cause substantial damage to existing wetlands and would have a lower exposure to flood hazards, but would still be exposed to potential catastrophic damage from flooding. In essence, this alternative would return the environmental setting to that which existed before the 2010 floods, with the same exposure to future flood hazards.

Alternative 2: Replacement by HDD, Jack and Bore, Tunneling and Trenching

This is the preferred alternative and it would avoid exposure to flood hazards, including scour, and not damage any wetland or riparian habitat during construction. Unless an accidental frack-out were to occur. Thus, this alternative would continue to occupy the floodplain, but reduce the potential for future flood damage to the maximum extent feasible. The preferred alternative would also avoid direct impacts to the floodplain by boring beneath the scour depth of the Mojave River. There is a potential to have a "frack-out" incident during the proposed Horizontal Direction Drilling (HDD) beneath the Mojave River channel. However, frack-out occurs more frequently near the entry and exit points of the bore, due to the descending and shallow nature of the bore at those points. Potential for frack-out within the Mojave River has been minimized by the bore being approximately 35' below the river channel bottom, and by placing the entry point of the bore approximately 200' from habitat areas and the exit point approximately 125' from habitat areas. All staging areas are also located well outside of any flood hazard or wetland impact areas.

Finally, Alternative 2 would be constructed deep beneath the channel and would be placed at such depth as to avoid these resource issues and avoid modification of the floodplain by boring beneath the Mojave River channel, eliminating damage to wetlands and removing the proposed sewer line from exposure to flood hazards, including scour from flooding.

3.1.4 PROTECTION OF WETLANDS – EXECUTIVE ORDER 11990

Executive Order (EO) 11990, Protection of Wetlands, requires Federal agencies to take action to minimize the destruction or modification of wetlands by considering both direct and indirect impacts to wetlands. Furthermore, EO 11990 requires that Federal agencies proposing to fund a project that could adversely affect wetlands consider alternatives to avoid such effects. FEMA's regulations for complying with EO 11990 are found in 44 CFR Part 9. The FEMA Eight-Step Decision-Making Process has also been applied to EO 11990 process for this project.

No Action Alternative

Additional repairs to the sewer line would not take place under the No Action Alternative and the potential for contamination of the Mojave River would remain. Wetlands and jurisdictional waters of the U.S. would be directly and indirectly impacted if temporary repairs failed or the sewer line became damaged again.

Alternative 1: In-Kind Repair

Up to a total of 15 acres of wetlands and riparian habitat could be adversely impacted from implementing Alternative 1. The Alternative 1 alignment shown on Figure 3 includes trenching across the River channel which contains substantial riverine and riparian habitat and then along the western edge of the channel where additional riparian habitat could be temporarily disturbed. Most of the impacts would be temporary based on the type of construction activities, but there would be about one acre of permanent effects at the surface access manholes that would be installed to support long-term maintenance of the sewer pipeline. Ongoing long-term maintenance of the In-Kind Repair alternative would require incursions into the wetland periodically over the long term. The wetland/riparian habitat effects of this are substantial and

adverse to these resources; compensatory mitigation, if feasible, is estimated to cost up to $1 million or more and require many years to implement.

Alternative 2: Replacement by HDD, Jack and Bore, Tunneling and Trenching

Installation of the new pipeline using HDD construction techniques would not cause any direct impact, temporary or permanent, to wetland resources located in the Mojave River channel at the project location. No wetland would be directly impacted under this alternative. One potential indirect effect on wetland habitat has been identified if this alternative is implemented. During the horizontal directional drilling a minimal potential exists for a frack-out (accidental release of drilling mud from the pipeline tunnel) to occur. Mitigation has been identified to address this potential impact and due to the depth of the HDD construction activity (approximately 30+ feet below the ground surface), the potential for adverse impact to the riparian habitat on the surface is considered to be very low.

3.1.5 AIR RESOURCES AND AIR QUALITY

Affected Environment

The State of California is divided geographically into 15 air basins. The project area is located within the Mojave Desert Air Basin (MDAB). The MDAB includes the desert portions of Los Angeles and San Bernardino Counties, the eastern desert portion of Kern County, and the northeastern desert portion of Riverside County. The Mojave Desert Air Quality Management District (MDAQMD) has jurisdiction over the desert portion of San Bernardino County and the far eastern end of Riverside County. This region includes the incorporated communities of Adelanto, Apple Valley, Barstow, Blythe, Hesperia, Needles, Twentynine Palms, Victorville, and Yucca Valley.

The Clean Air Act of 1970 (42 U.S.C. §§ 7401–7661 [2009]) is a comprehensive Federal law that regulates air emissions from area, stationary, and mobile sources. The act authorized the U.S. Environmental Protection Agency (EPA) to establish National Ambient Air Quality Standards (NAAQS) to protect public health and the environment.

An Air Quality Impact Analysis prepared by JE Compliance Services, Inc. for the project is the basis for much of the information provided in this section. The Air Quality Technical Study is provided in Appendix 4 to this document. The air quality regulatory jurisdictions within the project area include the EPA, the California EPA, specifically the California Air Resources Board (CARB), and the MDAQMD. The MDAQMD maintains air quality monitoring stations throughout the Basin. The nearest monitoring stations are located in Hesperia and Victorville. The Hesperia station monitors ozone and PM_{10} and the Victorville station monitors all criteria pollutants.

Meteorology: Weather and Climate

The climate of the Victor Valley is characterized by hot summers, mild winters, infrequent rainfall, moderate afternoon breezes, and generally fair weather. Average daily minimum winter temperature is 35°F, and average daily maximum summer temperature is 97°F. Temperatures typically average 62°F year-round. Rainfall within the MDAB averages around between 3 and 7 inches per year with light to moderate rain falling on only 10 days per year. The Victorville area may occasionally experience a light winter snowfall (12 inches per year)

The prevailing winds within the region provide a vehicle for visible smog to be transported from the South Coast Air Basin (SoCAB, the greater Los Angeles area) through the mountain passes to the MDAB. The rapid daytime heating of the lower air leads to convective activity. This

exchange of upper air tends to accelerate surface winds during the warm part of the day when convection is at a maximum. During the winter, the rapid cooling of the surface layers at night retards this exchange of momentum which often results in calm winds.

The primary air quality concern in the Victorville area is the southwest to northeast transport of air from the polluted South Coast Basin (SoCAB) through Cajon Pass toward the normally cleaner high desert, especially during the summer smog season. This meteorological pattern makes it difficult for the high desert area to achieve clean air until emission sources in the SoCAB are better controlled and less pollution is transported downwind through the desert communities.

In addition to winds that control the rate and direction of pollution dispersal, strong temperature inversions, that limit the vertical depth of the near surface air mass through which pollution can be mixed, are characteristic of southern California. In summer, coastal areas are characterized by a sharp discontinuity between the cool marine air at the surface and the warm, sinking air aloft. This marine/subsidence inversion allows for good local mixing but acts like a giant lid over the SoCAB. Air starting on-shore at the beach is relatively clean but becomes progressively more polluted as it moves east across sources which continue to add and/or create pollution from below without any dilution from above.

Some dilution occurs in the thermal chimneys along the heated slopes of the San Gabriel and San Bernardino Mountains but not enough to prevent the intrusion of significantly polluted air into the High Desert area. Marine/subsidence inversions generally do not extend into the high desert and, if they do, their bases are much higher than in coastal environments so there is little tendency for regional trapping effects of locally generated emissions. Air quality problems, particularly during the warm weather "smog season" are, therefore, primarily due to the import of pollutants from the upwind SoCAB and not due to any localized stagnation.

Air Quality Setting

Ambient Air Quality Standards (AAQS)

Ambient air quality standards (AAQS) are the levels of air quality considered safe, with an adequate margin of safety, to protect the public health and safety. They are designed to protect those people most susceptible to respiratory distress, such as asthmatics, the elderly, very young children, people already weakened by other disease or illness, and people engaged in strenuous work or exercise, called "sensitive receptors." Healthy adults can tolerate occasional exposure to air pollutant concentrations considerably above these minimum standards before adverse effects are observed. Recent research suggests, however, that long-term exposure to air pollution at levels that meet air quality standards may nevertheless have adverse health effects. For example, ozone exposure even at levels close to the ambient standard may lead to adverse respiratory health.

The federal Clean Air Act (CAA), the California Clean Air Act (CCAA), and the Air Quality Management Plan (AQMP), prepared and adopted by the MDAQMD, regulate air quality in the air basin. Those standards currently in effect in California are shown on Table 3.1.5-1.

Table 3.1.5-1
STATE OF CALIFORNIA AIR RESOURCES BOARD AMBIENT AIR QUALITY STANDARDS

Pollutant	Average Time	California Standards [1]		National Standards [2]		
		Concentration [3]	Method [4]	Primary [3,5]	Secondary [3,6]	Method [7]
Ozone (O3)	1 Hour	0.09 ppm (180 µg/m3)	Ultraviolet Photometry	–	Same as Primary Standard	Ultraviolet Photometry
	8 Hour	0.070 ppm (137 µg/m3)		0.08 ppm (157 µg/m3)		
Respirable Particulate Matter (PM10)	24 Hour	50 µg/m3	Gravimetric or Beta Attenuation	150 µg/m3	Same as Primary Standard	Inertial Separation and Gravimetric Analysis
	Annual Arithmetic Mean	20 µg/m3		–		
Fine Particulate Matter (PM2.5)	24 Hour	No Separate State Standard		35 µg/m3	Same as Primary Standard	Inertial Separation and Gravimetric Analysis
	Annual Arithmetic Mean	12 µg/m3	Gravimetric or Beta Attenuation	15 µg/m3		
Carbon Monoxide (CO)	8 Hour	9.0 ppm (10 mg/m3)	Non-Dispersive Infrared Photometry (NDIR)	9 ppm (10 mg/m3)	None	Non-Dispersive Infrared Photometry (NDIR)
	1 Hour	20 ppm (23 mg/m3)		35 ppm (40 mg/m3)		
	8 Hour (Lake Tahoe)	6 ppm (7 mg/m3)		–	–	–
Nitrogen Dioxide (NO2) *	Annual Arithmetic Mean	0.030 ppm (56 µg/m3)	Gas Phase Chemiluminescence	0.053 ppm (100 µg/m3)	Same as Primary Standard	Gas Phase Chemiluminescenc e
	1 Hour	0.18 ppm (338 µg/m3		–		
Sulfur Dioxide (SO2)	Annual Arithmetic Mean	–	Ultraviolet Fluorescence	0.030 ppm (80 µg/m3)	–	Spectrophotometry (Paraosaniline Method)
	24 Hour	0.04 ppm (105 µg/m3)		0.14 ppm (365 µg/m3)	–	
	3 Hour	–		–	0.5 ppm (1300 µg/m3)	
	1 Hour	0.25 ppm (655 µg/m3)		–	–	–
Lead 8	30-Day Average	1.5 µg/m3		–	–	–
	Calendar Quarter	–		1.5 µg/m3	Same as Primary Standard	High Volume Sampler and Atomic Absorption

Pollutant	Average Time	California Standards [1]		National Standards [2]		
		Concentration [3]	Method [4]	Primary [3,5]	Secondary [3,6]	Method [7]
Visibility Reducing Particles	8 Hour	Extinction coefficient of 0.23 per kilometer – visibility of 10 miles or more (0.07 - 30 miles or more for Lake Tahoe) due to particles when relative humidity is less than 70 percent. Method: Beta Attenuation and Transmittance through Filter Tape.		**No Federal Standards**		
Sulfates	24 Hour	25 µg/m3	Ion Chromatography			
Hydrogen Sulfide	1 Hour	0.03 ppm (42 µg/m3)	Ultraviolet Fluorescence			
Vinyl Chloride 8	24 Hour	0.01 ppm (26 µg/m3)	Gas Chromatography			

Note: * On February 19, 2008, the Office of Administrative Law approved a new Nitrogen Dioxide ambient air quality standard, which lowers the 1-hour standard to 0.18 ppm and establish a new annual standard of 0.030 ppm. These changes will become effective March 20, 2008.

Footnotes

1 California standards for ozone, carbon monoxide (except Lake Tahoe), sulfur dioxide (1 and 24 hour), nitrogen dioxide, suspended particulate matter – PM10, PM2.5, and visibility reducing particles, are values that are not to be exceeded. All others are not to be equaled or exceeded. California ambient air quality standards are listed in the Table of Standards in Section 70200 of Title 17 of the California Code of Regulations.

2 National standards (other than ozone, particulate matter, and those based on annual averages or annual arithmetic mean) are not to be exceeded more than once a year. The ozone standard is attained when the fourth highest eight hour concentration in a year, averaged over three years, is equal to or less than the standard. For PM10, the 24-hour standard is attained when the expected number of days per calendar year with a 24-hour average concentration above 150 µg/m3 is equal to or less than one. For PM2.5, the 24-hour standard is attained when 98 percent of the daily concentrations, averaged over 3 years, are equal to or less than the standard. Contact U.S. EPA for further clarification and current federal policies.

3 Concentration expressed first in units in which it was promulgated. Equivalent units given in parentheses are based upon a reference temperature of 25C and a reference pressure of 760 torr. Most measurements of air quality are to be corrected to a reference temperature of 25C and a reference pressure of 760 torr; ppm in this table refers to ppm by volume, or micromoles of pollutant per mole of gas.

4 Any equivalent procedure which can be shown to the satisfaction of the ARB to give equivalent results at or near the level of the air quality standard may be used.

5 National Primary Standards: The levels of air quality necessary, with an adequate margin of safety to protect the public health.

6 National Secondary Standards: The levels of air quality necessary to protect the public welfare from any known or anticipated adverse effects of a pollutant.

7 Reference method as described by the EPA. An “equivalent method” of measurement may be used but must have a “consistent relationship to the reference method” and must be approved by the EPA.

8 The ARB has identified lead and vinyl chloride as 'toxic air contaminants' with no threshold level of exposure for adverse health effects determined. These actions allow for the implementation of control measures at levels below the ambient concentrations specified for these pollutants.

Source: California Air Resources Board (02/21/08)

The CARB coordinates and oversees both State and federal air pollution control programs in California, and has divided the State into 15 air basins. Significant authority for air quality control within each basin has been given to local Air Pollution Control Districts (APCD) or Air Quality Management Districts (AQMD) that regulates stationary source emissions and develops

local non-attainment plans. The MDAQMD has jurisdiction over the air basin in which the proposed project is located and is responsible for regulating stationary source emissions, and has been given the authority to regulate mobile emissions as an indirect source.

Each attainment plan must define the present and anticipated extent of non-attainment, including adopted and proposed measures to reduce emissions of the pollutant and/or its precursors, and their anticipated effectiveness; the availability and effectiveness of additional control measures; the earliest practicable attainment date; any legal, technological, or administrative impediment to developing and implementing.

Regional Air Quality

Monitoring of air quality in the project area is the responsibility of the MDAQMD. The closest monitoring stations to the various project sites are located at the Victorville Station at 14306 Park Avenue and Hesperia at Olive Street. Ozone, carbon dioxide, nitrogen oxide, 10micron diameter particulate matter (PM10) and fine particulate matter (PM-2.5) are monitored at the Victorville facility. Only Ozone and PM-10 are monitored at Hesperia. The air quality monitoring data from these stations are provided on Tables 3.1.5-2 and 3.1.5-3. Pollutant concentrations within the MDAB exceed the federal and State standards for ozone and particulate matter (PM-2.5). In addition, the Basin is also a maintenance area for PM-10.

The MDAB air quality problems are caused by: unpaved road travel; construction activities; meteorological conditions and topographical constraints that slow down dispersal of pollutants out of the basin; a low ability to disperse pollutants vertically in the atmosphere; and a sunny climate that provides the photochemical energy that increases creation of ozone and other pollutants. As stated above, the MDAB is in non-attainment for ozone and particulate matter, but primary pollutants such as carbon monoxide (CO), nitrogen oxides (NOx), sulfur dioxide, sulfate, and lead do not exceed allowable levels and the MDAB is in attainment for these criteria pollutants.

Table 3.1.5-2
VICTORVILLE MONITORING STATION
PROJECT AREA AIR QUALITY MONITORING SUMMARY (2003-2009)
(Days Standards were Exceeded and Maximum Observed Levels)

Pollutant / Standard	2003	2004	2005	2006	2007	2008	2009
Ozone							
1-Hour > 0.09 ppm (S)	22	8	16	9	7	16	8
8-Hour > 0.07 ppm (S)	72	39	53	47	45	59	53
8-Hour > 0.075 ppm (F)	41	19	33	28	27	30	25
Max. 1-Hour Conc. (ppm)	0.145	0.111	0.131	0.136	0.107	0.109	0.111
Max. 8-Hour Conc. (ppm)	0.126	0.091	0.107	0.105	0.091	0.098	0.097
Carbon Monoxide							
1-Hour > 20 ppm (S)	0	0	0	0	0	0	0
8-Hour > 9 ppm (S,F)	0	0	0	0	0	0	0
Max. 1-Hour Conc. (ppm)	3.9	2.4	2.5	2.2	2.2	1.4	1.8
Max. 8-Hour Conc. (ppm)	2.1	1.7	1.6	1.6	1.6	1.0	1.1

Pollutant / Standard	2003	2004	2005	2006	2007	2008	2009
Nitrogen Dioxide							
1-Hour > 0.18 ppm (S)	0	0	0	0	0	0	0
Max. 1-Hour Conc. (ppm)	0.090	0.080	0.077	0.079	0.071	0.074	0.064
Inhalable Particulates (PM10)							
24-Hour > 50 µg/m3 (S)#	3/59	1/30	1/62	2/60	4/56	2/58	17/? [1]
24-Hour > 150 µg/m3 (F)	1/49	0.26	0/59	0/52	1/56	0/58	-
Max. 24-Hour Conc. (µg/m3)	169	53	57	56	339 [1]	72	307 [1]
Ultra-Fine Particulates (PM2.5)							
24-Hour > 65 µg/m3 (F)	0/108	0/124	0/109	0/63	0/64	0/56	NA
24-Hour > 35 µg/m3 (F)*	0/108	0/124	0/109	0/63	0/64	0/56	NA
Max. 24-Hour Conc. (µg/m3)	28	34	27	22	28	19	NA

Notes: * reduced to 35 µg/m3 in 2006
(S) - State ambient standard; (F) - Federal ambient standard; NA – not yet available
[1] data excluded due to high wind events

Source: Mojave Desert Air Basin – Victorville Air Monitoring Station Data Summary

Table 3.1.5-3
HESPERIA MONITORING STATION
PROJECT AREA AIR QUALITY MONITORING SUMMARY (2003-2009)
(Days Standards were Exceeded and Maximum Observed Levels)

Pollutant / Standard	2003	2004	2005	2006	2007	2008	2009
Ozone							
1-Hour > 0.09 ppm (S)	43	28	41	22	24	29	18
8-Hour > 0.07 ppm (S)	93	67	89	76	75	80	64
8-Hour > 0.075 ppm (F)	70	53	67	50	47	58	43
Max. 1-Hour Conc. (ppm)	0.163	0.138	0.140	0.148	0.132	0.132	-
Max. 8-Hour Conc. (ppm)	0.133	0.133	0.130	0.127	0.128	0.124	0.101
Inhalable Particulates (PM10)							
24-Hour > 50 µg/m3 (S)#	3/60	0/30	1/58	1/56	4/60	3/56	NA
24-Hour > 150 µg/m3 (F)	0/60	0/30	0/58	0/56	0/60	0/56	NA
Max. 24-Hour Conc. (µg/m3)	119	41	53	53	88	72	NA

Notes: (S) - State ambient standard; (F) - Federal ambient standard; NA – not yet available
[1] data excluded due to high wind events

Source: Mojave Desert Air Basin – Hesperia Air Monitoring Station Data Summary

The MDAQMD identifies specific quantitative emission thresholds that are recommended to local agencies for determining significance of air emissions from a specific project. These thresholds are listed in Table 3.1.5-4.

Table 3.1.5-4
MDAQMD EMISSIONS THRESHOLDS

Pollutant	Threshold (lb/day)	Threshold (tons/quarter)
Carbon Monoxide (CO)	548	100
Sulfur Oxides (SO_2)	137	25
Reactive Organic Compounds (ROC)	137	25
Nitrogen Oxide (NOx)	137	25
Particulate Matter (PM_{10})	82	15

Section 176(c) of the Clean Air Act Amendments of 1990 prohibits federal participation in projects that would impede implementation of the state implementation plan (SIP) for federal non-attainment pollutants. If the project-related emissions from construction and operations are less than specified "*de minimis*" levels, no further SIP consistency demonstration is required. The General Conformity Rule applies only to Federal actions that result in emissions of "nonattainment or maintenance pollutants," or their precursors, in Federally designated nonattainment or maintenance areas. The General Conformity Rule establishes a process to demonstrate that Federal actions would be consistent with applicable SIPs and would not cause or contribute to new violations of the NAAQS, increase the frequency of severity of existing violations of the NAAQS, or delay the timely attainment of the NAAQS. The emissions thresholds that trigger requirements of the conformity rule for federal actions emitting nonattainment or maintenance pollutants, or their precursors, are called *de minimis* levels. The MDAB is designated as a "moderate" non-attainment area for the federal 8-hour ozone standard. The Basin is a maintenance area for PM-10. Based upon these designations, the following *de minimis* emissions levels identified in Table 3.1.5-5 (below) are presumed evidence of SIP conformity:

Table 3.1.5-5
FEDERAL *DE MINIMIS* THRESHOLDS

Pollutant	Threshold (lb/day / tpy)
Nitrogen Oxide (NOx)	50 / 9.125
Reactive Organic Compounds (ROC)	50/ 9.25
Particulate Matter ($PM_{2.5}$)	100 / 18.50
Particulate Matter (PM_{10})	100 / 18.50

No Action Alternative

The No Action Alternative would not result in any direct air quality impacts. The existing temporary sewer line would not be replaced so no construction activity would be required to support this alternative. The existing temporary system does use a generator to pump the wastewater through the temporary sewer line. This system uses diesel fuel to operate the generators and the emissions from these operations would continue to occur. Assuming that

the diesel pump operates with a 100% load factor per day, the daily diesel pump emissions are estimated to be as follows: ROC = 5.0 lb/day; NOx = 64.0 lb/day; CO = 19.7 lb/day; and PM10 = 1.9 lb/day. It is assumed that these emissions would continue until one of the other alternatives is implemented or until VVWRA replaces the diesel pump with an electric pump and extends electricity to the pump station. This is not presently envisioned.

Table 3.1.5-6
DAILY DIESEL PUMP EMISSIONS

Pollutant	Threshold (lbs/day)
Carbon Monoxide (CO)	19.7
Nitrogen Oxide (NOx)	64.0
Reactive Organic Compounds (ROC)	5.0
Particulate Matter (PM_{10})	1.9

Alternative 1: In-Kind Repair

This alternative has not been quantified but it would require more construction equipment and disturb more area than the preferred alternative, Alternative 2, for which a detailed emission forecast has been compiled. Based on the comparable type of activities for construction between Alternative 1 and Alternative 2 and the location within the Mojave River channel where much of the material handled would be moist or wet, the In-Kind Repair alternative would also not be forecast to exceed the federal conformity standards used to evaluate air emissions from this project.

Alternative 2: Replacement by Tunneling

The air quality issues of focus in this evaluation are the impacts from short-term generation of air emissions, including:

- Construction Emissions: Airborne dust and emissions from the engines of heavy equipment and employee vehicles during construction associated with the proposed project.

The detailed analysis of construction emissions is provided in Appendix 4, the Air Quality Analysis. The following is a summary of findings. The tables referenced in the Air Quality analysis are brought forward into this section for clarity. The detailed analysis evaluated the following construction phases/activities: horizontal direction drilling; jack and bore; tunneling; open trenching; and equipment removal.

The unmitigated construction emissions from the project are provided in Tables 1 through 7 of Appendix 4. Unmitigated emissions of criteria pollutants from the construction phase of the project do not exceed the regional significance thresholds. Several scenarios of overlapping activities that do not exceed the daily regional significance thresholds are documented in Appendix 4. These multiple facilities construction scenarios also do not exceed MDAQMD emission thresholds.

However, because the MDAB is non-attainment for ozone and particulates, every project must minimize emissions of ozone precursor, combustion particulates and fugitive dust. The following mitigation measures would be implemented to reduce construction-related emissions to the extent feasible.

3.1.5-1 Water active grading sites and dirt haul roads at least twice daily and more often when fugitive dust is observed migrating from the construction site.

3.1.5-2 Suspend all grading and excavation operations when wind speeds exceed 25 mph as measured onsite or at the Southern California Logistics Airport.

3.1.5-3 Enclose, cover, or water twice daily or apply non-toxic soil binders to any onsite stockpiles of debris, dirt or other dusty material.

3.1.5-4 Hydro-seed with a native plant seed mix, apply non-toxic chemical soil stabilizers or otherwise stabilize any cleared areas which are to remain inactive from more than 10 days after clearing is completed.

3.1.5-5 Sweep any paved access points daily of any visible dirt deposition or any public roadway.

3.1.5-6 Reduce and control traffic speeds on unpaved roads to less than 15 mph.

3.1.5-7 All equipment shall be properly tuned and maintained in accordance with the manufacturer's specifications to minimize nitrogen oxide emissions.

3.1.5-8 Require 90-day low NOx tune-ups for off-road equipment.

3.1.5-9 During construction, trucks and vehicles in loading and unloading queues shall be kept with their engines off when not in use.

3.1.5-10 Encourage car pooling for construction workers.

3.1.5-11 Limit lane closures to off-peak travel periods, when possible.

3.1.5-12 Encourage receipt of materials during non-peak traffic hours.

Implementation of the above measures will further minimize construction emissions to the extent feasible, including minimizing fugitive dust emissions impacts on any adjacent sensitive receptors. Also, by ensuring that future construction activity in support of the proposed Project air emissions are controlled to a less than significant impact level, implementation of the proposed project would be consistent with and conform to the MDAQMD Air Quality Management Plan in place at the time of construction.

The Mojave Desert Air Basin (basin) is designated as non-attainment for PM10 and Ozone. The Basin is designated as an attainment area for CO, nitrogen dioxide (NO2), and Sulfur dioxide (SO2) and is unclassified for PM2.5. The attainment status of the criteria pollutants is summarized in Table 3.1.5-7. Based on the data presented in Tables 1 through 7 of Appendix 4, construction emissions do not exceed the *de minimis* thresholds established in 40 CFR 93.153. Construction emissions (in tons per year) for the project and the corresponding *de minimis* thresholds are provided in Table 3.1.5-7. The emissions from construction (in tons per year) are below 10 percent of the emission inventories for the basin.

Table 3.1.5-7
ATTAINMENT STATUS FOR CRITERIA POLLUTANTS*

Pollutant	Status
CO	Attainment
Sox	Attainment
NOx	Attainment
PM10	Non-attainment (moderate)
PM2.5	Unclassified
Ozone (1-hr)	Non-attainment (severe)
Ozone (8-hr)	Non-attainment (severe)

* Mojave Desert Air Quality Management District, Air Quality Management Plan

Table 3.1.5-8 - ANNUAL UNMITIGATED CONSTRUCTION EMISSIONS, tons/year

Activity	Source	Days	VOC	NOx	CO	SO2	PM10 (Dust)	PM10 (Exh)	PM10 (Total)	PM2.5 (Dust)	PM2.5 (Exh)	PM2.5 (Total)	CO2	CH4	NOx/VOC (Ozone)
Horizontal directional drilling	Fugitive dust	3	0	0	0	0	3.75E-03	0	3.75E-03	7.88E-04	0	7.88E-04	0	0	0
Horizontal directional drilling	Off-road equipment	3	1.95E-03	0.01	8.30E-03	1.88E-05	0	8.74E-04	8.74E-04	0	7.78E-04	7.78E-04	1.68	1.76E-04	0.02
Horizontal directional drilling	Worker trips	3	1.19E-04	1.16E-04	1.15E-03	1.61E-06	1.35E-05	0	1.35E-05	8.62E-06	0	8.62E-06	0.17	1.08E-05	2.36E-04
Horizontal directional drilling	Fugitive dust	63	0	0	0	0	6.30E-04	0	6.30E-04	1.32E-04	0	1.32E-04	0	0	0
Horizontal directional drilling	Off-road equipment	63	0.45	3.92	1.63	5.51E-03	0	0.16	0.16	0	0.14	0.14	525.18	0.04	4.37
Horizontal directional drilling	On-road equipment	63	0.03	0.41	0.14	5.36E-04	0.02	0.02	0.04	0.02	0.02	0.03	55.91	1.55E-03	0.44
Horizontal directional drilling	Worker trips	63	2.51E-03	2.44E-03	0.02	3.38E-05	2.83E-04	0	2.83E-04	1.81E-04	0	1.81E-04	3.47	2.26E-04	4.95E-03
Horizontal directional drilling	Steel manufacturing	63	0	0	0	0	0	0	0	0	0	0	39.63	0	0
Jack and bore reach I-B	Fugitive dust	15	0	0	0	0	6.90E-04	0	6.90E-04	1.45E-04	0	1.45E-04	0	0	0
Jack and bore reach I-B	Off-road equipment	15	0.01	0.10	0.05	1.21E-04	0	4.90E-03	4.90E-03	0	4.36E-03	4.36E-03	11.17	1.11E-03	0.11
Jack and bore reach I-B	Worker trips	15	5.97E-04	5.82E-04	5.74E-03	8.05E-06	6.73E-05	0	6.73E-05	4.31E-05	0	4.31E-05	0.83	5.38E-05	1.18E-03
Jack and bore reach I-B	Fugitive dust	15	0	0	0	0	1.73E-04	0	1.73E-04	3.62E-05	0	3.62E-05	0	0	0
Jack and bore reach I-B	Off-road equipment	15	0.01	0.10	0.05	1.21E-04	0	4.90E-03	4.90E-03	0	4.36E-03	4.36E-03	11.17	1.11E-03	0.11
Jack and bore reach I-B	Worker trips	15	5.97E-04	5.82E-04	5.74E-03	8.05E-06	6.73E-05	0	6.73E-05	4.31E-05	0	4.31E-05	0.83	5.38E-05	1.18E-03
Jack and bore reach I-B	Fugitive dust	15	0	0	0	0	5.25E-05	0	5.25E-05	1.10E-05	0	1.10E-05	0	0	0
Jack and bore reach I-B	Off-road equipment	15	0.06	0.50	0.28	7.53E-04	0	0.03	0.03	0	0.02	0.02	69.03	5.48E-03	0.56
Jack and bore reach I-B	On-road equipment	15	8.25E-04	0.01	3.33E-03	1.32E-05	4.88E-04	4.42E-04	9.30E-04	4.22E-04	4.07E-04	8.29E-04	1.38	3.80E-05	0.01
Jack and bore reach I-B	Worker trips	15	5.97E-04	5.82E-04	5.74E-03	8.05E-06	6.73E-05	0	6.73E-05	4.31E-05	0	4.31E-05	0.83	5.38E-05	1.18E-03
Jack and bore reach IB	Steel manufacturing	15	0	0	0	0	0	0	0	0	0	0	3.83	0	0
Jack and bore reach IV	Fugitive dust	15	0	0	0	0	6.90E-04	0	6.90E-04	1.45E-04	0	1.45E-04	0	0	0
Jack and bore reach IV	Off-road equipment	15	0.01	0.10	0.05	1.21E-04	0	4.90E-03	4.90E-03	0	4.36E-03	4.36E-03	11.17	1.11E-03	0.11
Jack and bore reach IV	Worker trips	15	5.97E-04	5.82E-04	5.74E-03	8.05E-06	6.73E-05	0	6.73E-05	4.31E-05	0	4.31E-05	0.83	5.38E-05	1.18E-03
Jack and bore reach IV	Fugitive dust	15	0	0	0	0	1.73E-04	0	1.73E-04	3.62E-05	0	3.62E-05	0	0	0

Activity	Source	Days	VOC	NOx	CO	SO2	PM10 (Dust)	PM10 (Exh)	PM10 (Total)	PM2.5 (Dust)	PM2.5 (Exh)	PM2.5 (Total)	CO2	CH4	NOx/VOC (Ozone)
Jack and bore reach IV	Off-road equipment	15	0.01	0.10	0.05	1.21E-04	0	4.90E-03	4.90E-03	0	4.36E-03	4.36E-03	11.17	1.11E-03	0.11
Jack and bore reach IV	Worker trips	15	5.97E-04	5.82E-04	5.74E-03	8.05E-06	6.73E-05	0	6.73E-05	4.31E-05	0	4.31E-05	0.83	5.38E-05	1.18E-03
Jack and bore reach IV	Fugitive dust	15	0	0	0	0	7.50E-05	0	7.50E-05	1.58E-05	0	1.58E-05	0	0	0
Jack and bore reach IV	Off-road equipment	15	0.06	0.50	0.28	7.53E-04	0	0.03	0.03	0	0.02	0.02	69.03	5.48E-03	0.56
Jack and bore reach IV	On-road equipment	15	8.00E-04	9.79E-03	3.23E-03	1.28E-05	4.73E-04	4.29E-04	9.02E-04	4.09E-04	7.49E-04	1.16E-03	2.53	6.99E-05	0.01
Jack and bore reach IV	Worker trips	15	5.97E-04	5.82E-04	5.74E-03	8.05E-06	6.73E-05	0	6.73E-05	4.31E-05	0	4.31E-05	0.83	5.38E-05	1.18E-03
Jack and bore reach IV	Steel manufacturing	15	0	0	0	0	0	0	0	0	0	0	3.57	0	0
Tunneling	Fugitive dust	42	0	0	0	0	1.93E-03	0	1.93E-03	4.06E-04	0	4.06E-04	0	0	0
Tunneling	Off-road equipment	42	0.05	0.36	0.18	4.37E-04	0	0.02	0.02	0	0.02	0.02	39.69	4.08E-03	0.40
Tunneling	On-road equipment	42	1.17E-04	1.63E-03	0.02	2.25E-05	1.89E-04	0	1.89E-04	1.21E-04	0	1.21E-04	2.31	1.51E-04	1.75E-03
Tunneling	Worker trips	42	1.67E-03	1.63E-03	0.02	2.25E-05	1.89E-04	0	1.89E-04	1.21E-04	0	1.21E-04	2.31	1.51E-04	3.30E-03
Tunneling	Fugitive dust	15	0	0	0	0	1.73E-04	0	1.73E-04	3.62E-05	0	3.62E-05	0	0	0
Tunneling	Off-road equipment	15	0.02	0.13	0.06	1.56E-04	0	6.86E-03	6.86E-03	0	6.10E-03	6.10E-03	14.18	1.46E-03	0.14
Tunneling	On-road equipment	15	1.31E-05	1.28E-05	1.26E-04	1.77E-07	1.48E-06	0	1.48E-06	9.49E-07	0	9.49E-07	0.02	1.18E-06	2.59E-05
Tunneling	Worker trips	15	5.97E-04	5.82E-04	5.74E-03	8.05E-06	6.73E-05	0	6.73E-05	4.31E-05	0	4.31E-05	0.83	5.38E-05	1.18E-03
Tunneling	Fugitive dust	42	0	0	0	0	2.12E-03	0	2.12E-03	4.45E-04	0	4.45E-04	0	0	0
Tunneling	Off-road equipment	42	0.04	0.45	0.26	8.80E-04	0	0.02	0.02	0	0.02	0.02	83.14	3.89E-03	0.50
Tunneling	On-road equipment	42	8.17E-04	0.01	3.30E-03	1.31E-05	4.84E-04	4.38E-04	9.22E-04	4.18E-04	4.04E-04	8.22E-04	1.36	3.77E-05	0.01
Tunneling	Worker trips	42	1.67E-03	1.63E-03	0.02	2.25E-05	1.89E-04	0	1.89E-04	1.21E-04	0	1.21E-04	2.31	1.51E-04	3.30E-03
Tunneling	Off-road equipment	21	0.04	0.13	0.15	4.53E-04	0	0.02	0.02	0	0.02	0.02	42.50	3.99E-03	0.17
Tunneling	On-road equipment	21	0.11	1.30	0.43	1.70E-03	0.06	0	0.06	0.05	0.05	0.11	177.07	4.89E-03	1.40
Tunneling	Worker trips	21	8.36E-04	8.15E-04	8.04E-03	1.13E-05	9.43E-05	0	9.43E-05	6.04E-05	0	6.04E-05	1.16	7.53E-05	1.65E-03
Tunneling	Steel manufacturing	21	0	0	0	0	0	0	0	0	0	0	23.92	0	0

Activity	Source	Days	VOC	NOx	CO	SO2	PM10 (Dust)	PM10 (Exh)	PM10 (Total)	PM2.5 (Dust)	PM2.5 (Exh)	PM2.5 (Total)	CO2	CH4	NOx/VOC (Ozone)
Trenching reach III	Fugitive dust	22	0	0	0	0	4.51E-04	0	4.51E-04	9.47E-05	0	9.47E-05	0	0	0
Trenching reach III	Off-road equipment	22	0.04	0.33	0.16	4.80E-04	0	0.02	0.02	0	0.01	0.01	44.76	3.64E-03	0.37
Trenching reach III	Worker trips	22	1.05E-03	1.02E-03	0.01	1.42E-05	1.19E-04	0	1.19E-04	7.59E-05	0	7.59E-05	1.45	9.46E-05	2.08E-03
Trenching reach III	On-road equipment	22	6.12E-05	7.48E-04	2.47E-04	9.78E-07	3.62E-05	3.28E-05	6.90E-05	3.13E-05	3.02E-05	6.15E-05	0.10	2.82E-06	8.10E-04
Trenching reach III	Steel manufacturing	22	0	0	0	0	0	0	0	0	0	0	13.09	0	0
Trenching reach III	Pavement off-gas	10	5.37E-05	0	0	0	0	0	0	0	0	0	0	0	5.37E-05
Trenching reach V	Fugitive dust	22	0	0	0	0	4.40E-05	0	4.40E-05	9.24E-06	0	9.24E-06	0	0	0
Trenching reach V	Off-road equipment	22	0.04	0.33	0.16	4.80E-04	0	0.02	0.02	0	0.01	0.01	44.76	3.64E-03	0.37
Trenching reach V	Worker trips	22	1.05E-03	1.02E-03	0.01	1.42E-05	1.19E-04	0	1.19E-04	7.59E-05	0	7.59E-05	1.45	9.46E-05	2.08E-03
Trenching reach V	On-road equipment	22	6.12E-05	7.48E-04	2.47E-04	9.78E-07	3.62E-05	3.28E-05	6.90E-05	3.13E-05	3.02E-05	6.15E-05	0.10	2.82E-06	8.10E-04
Trenching reach V	Steel manufacturing	22	0	0	0	0	0	0	0	0	0	0	1.12	0	0
Trenching reach V	Pavement off-gas	10	5.24E-06	0	0	0	0	0	0	0	0	0	0	0	5.24E-06
Equipment removal	Off-road equipment	10	0.03	0.29	0.12	3.68E-04	0	0.01	0.01	0	0.01	0.01	34.97	3.09E-03	0.32
Equipment removal	Worker trips	10	3.98E-04	3.88E-04	3.83E-03	5.36E-06	4.49E-05	0	4.49E-05	2.87E-05	0	2.87E-05	0.55	3.58E-05	7.86E-04
Equipment removal	On-road equipment	10	3.03E-04	3.71E-03	1.23E-03	4.85E-06	1.79E-04	1.63E-04	3.42E-04	1.55E-04	1.50E-04	3.05E-04	0.51	1.40E-05	4.01E-03
		Total (tons/year)	1.04	9.12	4.20	1.33E-02	0.10	0.36	0.46	0.08	0.38	0.45	1,358.70	0.09	10.16
		De minimus threshold (tons/year)	-	100	100	100	-	-	100	-	-	-	-	-	25
		Approximate Mojave Desert Air Basin emissions (tons/year)	17,341	47,096	-	-	-	-	85,021	-	-	-	-	-	64,437

3.2 BIOLOGICAL ENVIRONMENT

3.2.1 TERRESTRIAL AND AQUATIC ENVIRONMENT

A detailed Biological Assessment has been prepared for the proposed project by Tom Dodson & Associates' biologist, Ms. Shay Lawrey. The project consists of a mix of methods for meeting the need to restore permanent transport of Town of Apple Valley wastewater to the VVWRA regional Westside Water Reclamation Facility. The Biological Assessment is provided as Appendix 3 to this Environmental Assessment. The following summarizes the biology data base for the project area.

The Project area lies within a section of the Mojave River known as the Upper Narrows in the Victor Valley subregion, on the southern rim of the Mojave Desert, to the north of the San Bernardino-San Gabriel mountain ranges. The region is characterized by broad alluvial fans, old dissected terraces, playas, and scattered mountains. The Victor Valley communities occur on the broad surface of one of numerous coalescing alluvial fans and terraces, known as the Victorville Fan. This fan is a composite of alluvial deposits and soils from Pleistocene and recent times. Runoff from the San Gabriel and San Bernardino Mountains is the primary contributor to the surface stream flows and groundwater aquifers in the Victor Valley. The rivers and streams in the Victor Valley are dry most of the year and surface water is available only at springs and where localized geology causes rising groundwater to surface and flow above ground.

Reach I-A of the project crosses the Mojave River which is the largest drainage system in the Mojave Desert. The River's source is in the San Bernardino Mountains, south of Hesperia. Surrounding land uses include vacant land, open space, pasture range land, residential development, recreational parks, education facilities and major arterial roads. With the exception of Reach 1-A (refer to Figure 3), the alignment for Alternative 2, the preferred alternative, is either located in a tunnel or within the urbanized portion of Old Town Victorville. There are no native biological resources in these reaches of Alternative 2. For both the No-Action Alternative and Alternative 1 the sewer line alignments, most of the alignments will be located within the Mojave River floodplain.

The vegetation within the Mojave River, where Reach I-A of the preferred alternative and most of the alignments of the No Action Alternative and Alternative 1 projects are located, is in various seral stages and generally consists of tall, multilayered, open canopy riparian forest. The dominant vegetative species within this riparian forest include Fremont cottonwood species (*Populus fremontii),* black willow (*Salix goodingii*), narrow-leved willow (*Salix exigua*), arroyo willow (*Salix lasiolepis*), red willow (*Salix laevigata*), mulefat (*Baccharis salicifolia*), sycamore (*Platanus recemosa)* and elderberry *(Sambucus mexicana).* The dense riparian stands consist of an intricate three to four story canopy structure, with trees standing approximately 40, 25, and 12 feet tall with over 85 percent vegetative cover. The under story consists of cattail (*Typha latifolia*) and other native herbaceous riparian plants.

Outside of the Mojave River floodplain area, the primary vegetation communities in the project area can be characterized as dry desert wash, creosote bush scrub, alkali desert scrub, pasture, urban and ruderal. Vegetation here is typical of many locations in the southwestern Mojave Desert, with elements of both desert and foothill vegetation. Perennial plants included creosote bush (*Larrea tridentada*), California buckwheat *(Eriogonum fasciculatum),* allscale (*Atriplex polycarpa*), cheese bush (*Hymenoclea salsola*), linear-leaf goldenbush *(Ericameria*

linearifolius), rubber rabbitbrush *(C. nauseosus),* Anderson's box-thorn *(Lycium andersonii),* peachthorn *(L. cooperii),* spiny hopsage *(Grayia spinosa),* and desert needlegrass *(Achnatherum speciosum).* Annual plants detectable at the time of surveys included sticky sand blossoms *(Linanthus parryae),* California coreopsis *(Coreopsis californica),* Pringle's woolly daisy *(Eriophyllum pringlei),* common tidy tips *(Layia platyglossa),* Mojave sun-cups *(Camissonia campestris),* little gold-poppy *(Eschscholzia minutiflora),* purple desert lupine *(Lupinus schockleyi),* and desert dandelion *(Malacothrix glabrata)*. Other annuals observed were exotic, invasive species, such as split grass *(Schismus* sp.), shortpod mustard *(Hirschfeldia incana),* tumble mustard *(Sisymbrium altissimum)*, sisymbrium *(S. orientale),* hare barley *(Hordeum murinum),* red brome *(Bromus madritensis* ssp. *rubens),* and cheat grass *(B. tectorum),* or native plants adapted to disturbance, such as red-stemmed filaree *(Erodium cicutarium),* fiddleneck *(Amsinckia tessellata),* and Lemmon's lessingia *(Lessingia lemmonii).*

No **plants** listed as threatened or endangered or proposed under the federal Endangered Species Act (ESA) have been reported in the vicinity of the project site (Victorville 7.5-minute USGS quadrangle; CDFW 2011). On the other hand, three (3) federal listed **wildlife** species have been reported in the local vicinity of the project area. These species are the Southwestern Willow Flycatcher (SWWF), least Bell's Vireo (LBVI) and desert tortoise. In addition to local sightings and records, suitable habitat for these species occurs within the vicinity of the project site (CDFW 2011; USFWS 2011) within the Mojave River floodplain.

Based on background research of federally listed threatened and endangered species known to occur within the vicinity of the project site and habitats documented within and/or adjacent to the project site, SWWF, LBVI and desert tortoise have the potential of being directly and/or indirectly impacted as a result of project implementation. No other federally listed plant or animal species has the potential to occur in the project area based on the analysis in Appendix 3, Table 2.

The SWWF is a small passerine bird that has a grayish-green back and wings, whitish throat, a light gray-olive breast, and pale yellowish belly. It has two visible white wing bars and a faint or absent eye ring. The call consists of a repeated "whit" and their song is a sneezy "fitz-bew." (60 FR 10694) The SWWF is currently one of the four recognized subspecies of the willow flycatcher. This flycatcher is a neotropical migrant that breeds in the southwestern United States from mid-April to early-September. In the fall, it migrates south to its wintering grounds in portions of South America, Central America and Mexico. (60 FR 10694)

The SWWF breeds in dense riparian habitats along rivers, streams, and other wetlands. They have been documented to establish territories in elevations ranging from sea level to 8,500 feet (Sogge 1997). Plant species closely associated with the SWWF include willows, boxelder (*Acer negungo*), seepwillow (*Baccharis* spp.), with an overstory of cottonwood (62 FR 39129). Occupied habitat is generally dominated by shrubs and trees 13 to 23 feet or more in height, which provide dense lower and mid-story vegetation approximately 13 feet aboveground. This dense vegetation is often interspersed with open water, small openings, or sparse vegetation, creating a mosaic that is not uniformly dense (62 FR 39129).

The LBVI is a small, olive-gray migratory songbird that nests and forages almost exclusively in riparian woodland habitats. Bell's vireos are highly territorial and are almost exclusively insectivorous. LBVI nesting habitat typically consists of well developed overstory, understory, and low densities of aquatic and herbaceous cover. The understory frequently contains dense sub-shrub or shrub thickets. These thickets are often dominated by plants such as narrow-leaf willow, mulefat, young individuals of other willow species such as arroyo willow or black willow,

and one or more herbaceous species. LBVI generally begin to arrive from their wintering range in southern Baja California and establish breeding territories by mid-March to late-March. A large majority of breeding vireos apparently depart their breeding grounds by the third week of September and only a very few have been found wintering in the United States.

Although LBVI use a variety of riparian plant species for nesting, it appears that the structure of the vegetation is more important than other factors such as species composition or the age of the stand. LBVI begin to arrive at their breeding grounds in southern California riparian areas from mid-March to early April. Upon arrival, males establish breeding territories that range in size from 0.5 to 7.4 acres, with an average size of approximately 2 acres. After pair formation, vireos construct a hanging cup nest made up of dried plant material. Nests are usually placed in forks of branches between 2 and 5 feet from the ground. Females lay two to five eggs with both parents incubating the clutch for approximately 14 days and the young fledging after 10 to 12 days. The fledglings would remain in the parental territory for up to a month. In southern California LBVI leave the breeding grounds and migrate south mid- to late- September.

The desert tortoise is listed as a federally threatened species. Throughout its range it is threatened by habitat loss, domestic grazing, predation, collections, and increased mortality rates. Critical habitat for the desert tortoise was designated on February 8, 1994 (FR 59 5820 5866). The project site is not located within designated critical habitat. The desert tortoise is typically found in creosote bush scrub. They are most often found on level ground where the substrate is firm but not too rocky. Tortoise burrows are typically found at the base of shrubs, in the sides of washes and in hillsides. Recent activity at tortoise burrows may be indicated by footprints, fresh dirt on the apron of the burrow, fresh scat, crushed vegetation or recently exposed roots in the burrow wall. In 1992 the US Bureau of Land Management issued the California Statewide Desert Tortoise Management Policy which included categorizing habitat into three levels of classification. The management goal for Category I areas is to maintain stable, viable populations and to increase the population where possible. The management goal for Category II areas is to maintain stable, viable populations. The management goal for Category III areas is to limit population declines to the extent feasible. The entire project occurs in desert tortoise habitat designated as Class II.

Critical Habitat is designated by USFWS for some threatened and endangered species. The portion of the project within the Mojave River floodplain is mapped within SWWF critical habitat.

General Discussion of Impacts

The construction methods for each of the project alternatives is summarized in the project description. Through the use of alternative construction methods, Alternative 2 has been able to avoid areas that contain significant biological resources. The following is a summary of the impacts on biological resources that occur within the project's area of potential effect (APE). As noted above, the following listed species occur within the project area: Southwestern willow flycatcher (SWWF); least Bell's vireo (LBVI); and desert tortoise.

The existing temporary pipeline (No Project Alternative) Alternative 1 was installed on the surface of the Mojave River channel in an alignment adjacent to the pipeline that was damaged/destroyed by the December 2010 floods. This emergency installation occurred in December 2010 and therefore avoided the direct take of any listed or nesting birds species. As shown on Figure 3, the No Project Alternative and the In-Kind Repair Alternative are located within the channel of the Mojave River floodplain, where the highly sensitive riparian/wetland habitat occurs.

No Action Alternative

As described in the project description, the No Action Alternative would leave the temporary sewer pipeline installed by VVWRA immediately following damage and loss of the original sewer line across the Mojave River. Aside from the fact that this sewer line is very vulnerable to future high runoff flood events because it is on the surface of the Mojave River floodplain, the No Action Alternative would not have any direct adverse effect on the important biological resources within the pipeline alignment. The only activity with a potential to adversely impact biological resources in the future would be continuned maintenance activities for this temporary sewer pipeline. This could include use of heavy equipment to protect the temporary pipeline from flood hazards and an additional possible release of raw sewage. These maintenance activities have a potential to damage existing critical habitat and sensitive species resources and to possibly include additional fill material to protect these temporary facilities. The amount of habitat damage has not been quantified, but is estimated to be several acres in extent.

Indirectly, the implementation of the No Action Alternative results in the temporary sewer pipeline being exposed to future high runoff flood events, and a continuing potential for failure of the temporary pipeline during such an event. In turn, such a failure would again release raw sewage to the Mojave River with the indirect effect of degrading water quality and harming the riparian habitat into which the raw sewage would be discharged. This damage includes modifications to the base of the food chain in the riparian/wetland habitat through contamination and then potential damage to the plants and wildlife that is dependent on this base. It is not possible to predict the specific damage to the habitat that would occur, but only acknowledge the potential for such damage from a raw sewage release.

Alternative 1: In-Kind Repair

The In-Kind Repair of the sewage transmission pipeline system shown on Figure 3 has the potential to cause substantially greater damage within the Mojave River channel than the No Action Alternative or Alternative 2. This is because of the trench construction activities that would be required to install the new sewer pipeline through in-kind repair, i.e., trenching across the River channel, as shown in Figure 3, would temporarily disturb and eliminate up to ten acres of riparian habitat occupied by endangered species. The subsequent installation of the replacement sewer pipeline and manholes from the western terminus of the River- crossing pipeline north along the western edge of the River channel to approximately the terminus of 7th Street (just north of Highway 18) would cause a portion of this overall disturbance. Due to the presence of the high groundwater table along the In-Kind Repair pipeline alignment, the total area of disturbance within sensitive habitat is estimated to be as high as 15 acres, which would be temporary disturbance, not permanent disturbance, except as described below. This estimate is based on the assumption that to install the pipeline by trench within the River (the Alternative 1 alignment) would require temporary disturbance for construction purposes of an area 100 feet in width and approximately 6,500 feet in length. Substantial temporal damage to riparian and wetland habitat, channel areas under the jurisdiction of the regulatory agencies (Corps, Regional Board and CDFW), and federal and state listed species under the jurisdiction of the USFWS and CDFW could result from implementing this alternative. It is assumed that the temporarily disturbed habitat could be restored within the Mojave River to its comparable quality over a five to ten year period of time.

Although there would be no permanent disturbance at the surface level of the channel (it is assumed that the new manholes at the surface would not occupy greater area than that of the existing manholes), the shallow nature of the In-Kind Repair sewer pipeline installed by trenching would result in a circumstance where a future flood could cause comparable damage in the future, resulting in the same type of emergency response and temporary impacts to the

habitat resources as occurred in December 2010. Thus, the long-term potential for damage to the Mojave River's biological resources would remain at risk under this alternative.

Alternative 2: Replacement by HDD, Jack and Bore, Tunneling and Trenching

According to the project biology report, Alternative 2 (installation of the sewer pipeline at great depth using HDD construction techniques) eliminates all potential direct effects on riparian habitat and sensitive species. This alternative results in the installation of the pipeline beneath the Mojave River channel at substantial depth using HDD techniques. The two portals for the HDD approach would be located within existing disturbed areas just outside of the riparian habitat. These portals are shown on Figure 3 and 5. The entry portal is located on the east side of the channel, adjacent to the Lewis Center. The entry portal is located on sandy substrate without any vegetation and no sign of desert tortoise. The exit portal is located on the Kemper Campbell Ranch, on a terrace above the active River channel. The exit portal is located in an agricultural field with no native vegetation. The only potential adverse effects on the riparian habitat and the sensitive species it supports would be indirect effects from construction activities and related noise. FEMA consulted with the FWS regarding the potential impacts identified for Alternative 2 and received the letter response provided in Appendix 5. Based on the information contained in the Biology Report (Appendix 3 of this document), the USFWS concluded that "the site does not appear likely to support the southwestern willow flycatcher or desert tortoise, and is not within designated southwestern willow flycatcher critical habitat." It further concluded "We concur with your decision that the proposed action is not likely to adversely affect the least Bell's vireo. The following measures were identified in the FWS letter to avoid impacts to sensitive species. Measures are also identified to minimize the indirect effects from construction activities will be implemented by VVWRA.

3.2.1-1 ***No above-ground work will occur within riparian habitat and no riparian vegetation will be removed.***

3.2.1-2 ***The only above-ground work within reaches 1A and 1B will occur at the portals of the horizontal direction drilling sites located in previously disturbed areas outside of the riparian habitat boundaries.***

3.2.1-3 ***No activity will occur within reaches 1-A and 1-B during the nesting season from March 15 through September 15.***

3.2.1-4 ***An approved biological monitor will be retained by VVWRA. The biological monitor must be knowledgeable about LBVI, SWWF and desert tortoise biology and ecology. At least 7 days prior to initiating project activities, VVWRA shall submit in writing the name(s), permit numbers, and resumes of all proposed biological monitors to the U. S. Fish and Wildlife Service (USFWS). Project-related ground disturbance shall not begin until a biological monitor has been approved by the USFWS. During construction, if there is to be any vegetation clearing, the biological monitor will conduct a pre-construction sweep of the work area (where habitat is suitable) to ensure that no sensitive species such as LBVI, SWWF and desert tortoise are present. The biological monitor will be onsite during any vegetation clearing and will conduct weekly site inspections during the remainder of construction within areas that contain suitable habitat. The biological monitor will have the authority to halt or suspend any project-related activities that are not in compliance with State or federal laws.***

3.2.1-5 ***The biological monitor will conduct orientation meetings for all construction personnel, including temporary contractors that include: a) a description of LBVI, SWWF and desert tortoise and their respective habitats on the project site; b) the limits of construction; and c) the conservation measures to be implemented in conjunction with project construction. The orientation shall also include information regarding sensitive species known to occur in the near vicinity of the project. The class shall also provide relevant information regarding the Federal and State laws and worker responsibilities***

when working adjacent to or in riparian habitat. All employees will received handouts summarizing the class information and will be required to sign an acknowledgment of attending the class and committing to implement measures to reduce impacts on biological resources.

3.2.1-6 All project activities will be limited to a well-defined area. Prior to construction activities commencing, the limits of disturbance will be clearly marked with stakes and orange construction barrier fencing.

3.2.1-7 VVWRA shall make every effort to conduct above-ground construction within Reaches I-A and I-B between September 15 and March 15 to avoid the bird nesting season. If not possible, VVWRA will have the biological monitor survey Reaches I-A and I-B on a weekly basis during breeding season for LBVI and SWWF within 500 feet of the construction footprint beginning after March 15 and continuing through September 15, or until such date that it becomes evident that LBVI and/or SWWF have left the survey area. The biologist will identify and monitor the location of territories and observe for behavior such as nest building, egg incubation, brood rearing, and nest or parasitism within the 500 foot zone from the construction footprint.

3.2.1-8 A qualified individual with the proper equipment will ensure that appropriate noise abatement measures are implemented and will conduct weekly breeding season noise monitoring at active construction locations adjacent to LBVI and/or SWWF territories to determine whether noise levels within 50 feet of territories are greater than 60 dBA Leq.

3.2.1-9 Construction noise will be minimized through installation and use of noise-reducing equipment in all construction vehicles, and reducing speed limits for travel within the Mojave River floodplain to 10 miles per hour. In the event that noise is consistently greater than 60 dBA Leq within 50 feet of a LBVI and/or SWWF territory, sound barriers shall be erected in the work area in discrete locations, around the specific stationary equipment, such as the HDD drill rig, the Bore and Jack pits, and the tunnel pits, to allow construction to proceed within a buffer zone.

3.2.1-10 Although no desert tortoise were detected during protocol surveys, habitat near the portals and staging areas is considered marginally suitable for this species. Therefore, a qualified biologist shall conduct one pre-construction clearance survey within 30 days prior to initiating construction. Following the pre-construction survey, the biologist will make a determination: (1) if a biological monitor should be present at the site during all clearing and grubbing activities above grade; (2) if desert tortoise fencing needs to be installed around the perimeter of the construction work zone; or (3) if no further action is required. The biologist/monitor should remain on-call during construction activities to respond to a circumstance where a desert tortoise wanders into the construction area.

In the unlikely event a desert tortoise is encountered during construction, no person including the biologist shall touch the animal. Instead, the biologist will observe the area to see if the desert tortoise has an established burrow or if it just wandering through the site. Construction within the area of the tortoise shall cease and the biologist will contact the USFWS and FEMA to coordinate with them and to receive instruction. Above grade disturbance activities shall not commence until the biologist has implemented the required measures according to the two agencies to clear the site and recommence construction activities.

3.2.1-11 Impacts to nesting bird species are prohibited under the Federal Migratory Bird Treaty Act (MBTA). The MBTA makes it unlawful to take, possess, buy, sell, purchase, or barter any migratory bird listed in 50 CFR Part 10, including feathers or other parts, nests, eggs, or products, except as allowed by implementing regulations (50 CFR 21). Suitable nesting bird habitat has been documented within and immediately adjacent to the proposed action area. Therefore, to remain in compliance with the MBTA, nesting bird surveys will be conducted within and adjacent to the action area prior to and during all proposed actions conducted between February 15 and September 15.

3.2.1-12 ***Prior to conducting any proposed actions during the breeding season (March 15 through September 15), the monitoring biologist will conduct a pre-construction survey/surveys to identify any active nesting locations in and near the project area no more than three days prior to project initiation, clearing and grubbing. If the biologist does not find any active nests that would be potentially impacted, the proposed action may proceed. If the biologist finds an active nest within or adjacent to the action area and determines that the nest may be impacted, the biologist will delineate an appropriate buffer zone to be fenced off with orange construction fencing around the nest. Any active nests observed during the survey will be mapped on a recent aerial photograph, including documentation of GPS coordinates. Only specified activities (if any) as approved by the qualified biologist, will take place within the buffer zone until the nest is vacated.***

3.2.1-13 ***The proposed action area is located adjacent to a few large Fremont's cottonwood trees favored by raptors. Surveys for active raptor nests will be performed in all adjacent habitats and trees no more than three days prior to commencement of any activities during raptor nesting season, February 1 through June 30. Active raptor nests observed during the survey will be mapped on a recent aerial photograph include documentation of GPS coordinates. Restrictions in construction activities may be required in the vicinity of the nest until the nest is no longer active as determined by the qualified biologist. Typically, a buffer zone will be designated around a nest to allow activities to proceed while minimizing disturbance to the active nest. Once the nest is no longer active, the proposed action may proceed within the buffer zone. Impacts on active raptor nests shall be avoided.***

The remainder of the Alternative 2 sewer pipeline alignment would avoid any biological resources by tunneling from a portal at the Kemper Campbell Ranch to C Street in downtown Victorville and from there the sewer line would be installed by trenching within existing roadways and disturbed areas. Based on these data and implementation of project minimization measures for biological resources, Alternative 2 would not cause a substantial adverse effect on the known sensitive biological resources within the Alternative 2 sewer pipeline alignment. There would be no direct take of listed species and through avoidance and/or minimization measures there would be no substantial adverse effect to sensitive species. This conclusion is consistent with the FWS findings referenced above and presented in Appendix 5.

The eastern portal and a short segment of the sewer pipeline would be located in a sandy desert wash area that has been determined not to be waters of the United States or State of California. Therefore, unless construction activities and site location are altered, the implementation of Alternative 2 will not require regulatory permits or agreements under Section 404 of the Clean Water Act, Section 401 of the Clean Water Act and Section 1600 of the State Fish and Wildlife Code. The area of impact does not contain any riparian vegetation or wetlands and is not considered a water of the United States and State of California. Approximately one acre would be temporarily disturbed on the periphery of the desert wash to support installation of the Alternative 2 sewer pipeline. If the eastern portal location is modified, the following contingency mitigation measure will be implemented to offset the short- and long-term effects to Waters of the United States and State.

3.2.1-14 ***Prior to discharge of fill or streambed alteration of jurisdictional areas, the project proponent shall obtain regulatory permits from the U.S. Army Corps of Engineers, Lahontan Regional Water Quality Control Board and the California Department of Fish and Wildlife. Mitigation can be provided by purchasing into any authorized mitigation bank; by selecting a site of comparable acreage near the site and enhancing it with a native riparian habitat or invasive species removal in accordance with a habitat mitigation plan approved by regulatory agencies; or by acquiring sufficient compensating habitat to meet regulatory agency requirements. Typically, regulatory agencies require mitigation for jurisdictional waters without any riparian or wetland habitat to be mitigated at a 1:1 ratio. For loss of any riparian or other wetland areas, the mitigation***

ratio will begin at 2:1 and the ratio will rise based on the type of habitat, habitat quality, and presence of sensitive or listed plants or animals in the affected area. A revegetation plan using native riparian vegetation common to the project area where riparian or wetland habitat will be affected shall be prepared and reviewed and approved by the appropriate regulatory agencies. The project proponent will also obtain permits from the regulatory agencies (Corps, Lahontan RWQCB, and CDFW) if any impacts to jurisdictional areas will occur. These agencies can impose greater mitigation requirements in their permits, but the VVWRA will utilize the ratios outlined above as the minimum required to offset or compensate for impacts to jurisdictional waters, riparian areas or other wetlands.

3.2.2 THREATENED AND ENDANGERED SPECIES

Affected Environment

The affected environment for listed species is summarized in the preceding section and in Appendix 3 of this document. The following impact findings are presented as a summary of these findings and the results of consultation with the FWS. The federal ESA requires the FWS to identify and list those plant and animal species that are considered to be threatened or endangered within a specific area. Before any party, including FEMA, can incidentally take any listed species, it must first obtain an “Incidental Take Permit” under either Section 7 or Section 10 of the ESA. In evaluating incidental take requests from an agency, the FWS weighs the potential for the proposed action to have any direct or indirect effect on the listed species. FEMA submitted the biology report in Appendix 3 of this document to the FWS and obtained concurrence of a finding that the preferred alternative would not have any adverse effect on listed species if appropriate mitigation measures (listed below) are implemented. On the other hand, implementation of Alternative 1 could cause substantial adverse effects on two listed bird species and their habitat in the Mojave River channel due to above-ground trenching activities in the Mojave River channel wetland habitat required to implement Alternative 1.

No Action Alternative

As described in the project description, the No Action Alternative would leave the temporary sewer pipeline installed by VVWRA immediately following damage and loss of the original sewer line across the Mojave River. Aside from the fact that this sewer line is very vulnerable to future high runoff flood events, the No Action Alternative would not have any direct adverse effect on the listed species within the sewer pipeline alignment. The only activity with a potential to adversely impact biological resources in the future would be continuned maintenance activities for this temporary sewer pipeline. This could include use of heavy equipment to protect the temporary pipeline from flood hazards and an additional possible release of raw sewage. These maintenance activities have a potential to damage existing critical habitat and sensitive species resources and to possibly include additional fill material to protect these temporary facilities. The amount of habitat damage has not been quantified, but is estimated to be several acres in extent.

Indirectly, the implementation of the No Action Alternative results in the temporary sewer pipeline being exposed to future high runoff flood events, and a continuing potential for failure of the temporary pipeline during such an event. In turn, such a failure would again release raw sewage to the Mojave River with the indirect effect of degrading water quality and harming the riparian habitat into which the raw sewage would be discharged. This damage includes modifications to the base of the food chain in the riparian/wetland habitat through contamination and then potential damage to the listed species that are dependent on this base. It is not possible to predict the specific damage to the habitat that would occur, but only acknowledge

the potential for such damage from a raw sewage release as a result of a future major flood event.

Alternative 1: In-Kind Repair

Implementation of the In-Kind Repair under Alternative 1 has a potential to incidentally take at least two listed bird species (SWWF and LBV) from above ground construction activities within the Mojave River channel. Based on field reviews, the project area was occupied by LBV during the spring of 2011 and SWWF may occur in the project area. Even construction outside of the breeding season would harm habitat, including critical habitat for the SWWF. If Alternative 1 is implemented, a substantial adverse impact to listed species and their habitat could occur. Limited mitigation is available, but the temporary loss of habitat and incidental take of listed species have a high probability of occurring under this alternative. Based on surveys and available mitigation, no adverse desert tortoise effects are forecast to occur under this alternative. The desert tortoise is listed as Threatened under the Federal Endangered Species Acts.

Alternative 2: Replacement by HDD, Jack and Boar, Tunneling and Trenching

Based on the field surveys, Alternative 2 has no potential for direct incidental take of listed species or habitat. The two listed bird species would be avoided by use of HDD construction methodology to avoid disturbing any of the riparian or wetland habitat within the Mojave River channel. As discussed in the preceding section, the FWS has concurred in this finding, based on implementation of specific mitigation measures, primarily avoidance. Based on the surveys and available mitigation, no adverse desert tortoise effects were identified from implementing Alternative 2. Pre-construction surveys of the HDD portals and the staging areas will be conducted prior to implementing HDD construction activities to verify that no sensitive species have entered the above ground construction areas associated with Reach 1.

3.2.3 INVASIVE SPECIES – EXECUTIVE ORDER 13112

EO 13112, Invasive Species, requires Federal agencies to prevent the introduction of invasive species; provide for their control; and minimize the economic, ecological, and human health impacts that invasive species cause. Specifically, EO 13112 requires that Federal agencies not authorize, fund, or implement actions that are likely to introduce or spread invasive species unless the agency has determined that the benefits outweigh the potential harm caused by invasive species and that all feasible and prudent measures to minimize harm have been implemented. Based on the biology data contained in Appendix 3, there are known invasive species located within the project area.

No Action Alternative

Under the No Action Alternative, there would be no direct impacts related to the spread of invasive species. However, without implementation of permanent sewer line repairs, future flooding events could potentially disrupt or clear existing vegetation from the area, encouraging the growth of invasive weeds in the project area that prefer disturbed areas.

Therefore, the No Action Alternative would have potential indirect impacts relating to the spread of invasive weeds within the project area, but no new direct effect.

Alternative 1: In-Kind Repair

The type of equipment required to the install sewer pipeline by the trenching method is typically brought to the site from other locations and can bring non-native plant seeds into the work area. Since this alternative requires substantial disturbance of the riparian habitat within the Mojave

River channel, a substantial potential exists to introduce non-native invasive plants into this environment or to facilitate expansion of invasive weed species that already occur in the project area. Even though this alternative has the highest potential to introduce invasive species, mitigation is available (through mandating that all equipment be washed and sterilized prior to being allowed onsite) to minimize the introduction of invasive species into the local environment.

Alternative 2: Replacement by HDD, Jack and Bore, Tunneling and Trenching

Aside from the limited trenching required to connect the proposed pipeline to the existing pipelines, the HDD, tunneling and trenching activities in paved roadways has a minimal potential to introduce invasive species into the project area, particularly the Mojave River channel. As in the case for Alternative 1, the limited above ground trenching activities that could introduce invasive species can be controlled to minimize this potential impact. The following minimization measure will be implemented.

3.2.3-1 ***Prior to delivery of all construction equipment for Reaches 1 and 2 to the project site, the equipment shall be washed and sterilized at a designated location outside of the project area. The contractor shall provide documentation that mobile equipment delivered to the site to support trenching activities has been washed and sterilized prior to delivery to the project site.***

3.3 HAZARDOUS MATERIALS

Affected Environment

There are four (4) sites identified on the Geotracker website that are in the project vicinity. These include:

- Former NuWay Dry Cleaners: 8th & C Streets, Site Number T10000001951
- Beck Oil LUST: 8th & D Streets, Site Number T0607100779
- D Street Mitigation: 6th & D Streets, Site Number SLT6V0063833
- Southdown Victorville LUST: 6th & E Streets, Site Number T0607100664

All of these locations occur in the Old Town Victorville area. No contaminated sites are known to occur within any other reach of the proposed project for any of the alternatives. One of the sites, Beck Oil appears to have free hydrocarbon product in the ground. The preferred alternative, Alternative 2, will be required to work within this difficult contaminated environment to install the new sewer pipeline using trenching and jack and bore techniques through this area. No other known contaminated sites existing with the area of potential impact of all three alternatives.

No Action Alternative

This alternative would not result in additional construction activity and would not enter into areas with known potential contamination. As a result, this project has no direct or indirect potential to introduce hazardous materials into the environment or expose already existing contaminated areas during construction.

Alternative 1: In-Kind Repair

Under Alternative 1 construction equipment that relies on petroleum products for fuel, hydraulic fluids and lubricants would be used under this alternative. This creates a potential to accidentally release hazardous materials into the environment, including the Mojave River. To minimize the potential for accidental release of hazardous materials into the environment the following mitigation measure will be implemented.

3.3-1 If an accidental release occurs, the cleanup of petroleum products is regulated by State and local regulations that have been determined to be adequate to reduce the risk of exposure of humans to an acceptable level. Mitigation Measure 3.1.2-1 requires the preparation and implementation of a Storm Water Pollution Prevention Plan (SWPPP). The purpose of the SWPPP is to prevent the contamination of stormwater during construction activities. The SWPPP shall include a Spill Prevention and Cleanup Plan which establishes the methods that must be implemented to minimize the potential for the spill of hazardous substances, as well as methods of containing, cleaning up and disposing of hazardous materials in the event of an accidental release of such materials.

In addition to the potential accidental release of hazardous materials, the In-Kind Repair of the existing sewer pipeline in the vicinity of 7th and 8th Streets and D Street has a high probability of encountering sites known to be contaminated with hazardous materials. The pipeline alignment (open trenching section) in downtown Victorville is the only one that has known contaminated sites that may be affected by Alternative 1 proposed project. Mitigation measures identified under the Alternative 2 discussion below, measures 3.3-2 through 3.3-4 would be applicable to the Alternative 1 construction activities within the Beck Oil contaminated site where the Alternative 2 pipeline would reconnect to the existing VVWRA sewer main shown on Figure 3. Once installed and placed in operation, Alternative 1 would not generate any hazardous materials.

Note that disposal of any pipeline material removed after Alternative 1 is installed would consist of non-hazardous materials that would be disposed of at a municipal landfill. The closest municipal landfill is about three miles from the project area in the City of Victorville.

Alternative 2: Replacement by HDD, Jack and Bore, Tunneling and Trenching

These four known contaminated sites are located in close proximity to the project's Area of Potential Effect (APE) for the final segment of Alternative 2. One of the sites, Beck Oil has free hydrocarbon product in the ground. The project would have to work within this difficult contaminated environment to install the new sewer pipeline using trenching and jack and bore techniques through this area. To protect the employees working in this area VVWRA would require the contractor to manage any exposure to volatile organic compounds (VOC) or contaminated soil that could possibly be encountered released during construction. Through management of the exposures within the contaminated construction areas and based on the short period of exposure to the subsurface contamination, the potential exposure of workers and sensitive local residents does not pose a substantial hazard.

The following information was developed regarding the Beck Oil contaminated site. (1) The existing sewer alignment in the Mojave River intersects the Beck Oil site. To replace the existing sewer in-place would result in construction with this site. (2) The proposed sewer alignment out of the Mojave River, on 8th Street, intersects the Beck Oil site. To construct the proposed new sewer pipeline on 8th Street would result in construction within this site. (3) The solution to this exposure was the relocate the proposed sewer alignment out of the Mojave River onto 7th Street, which avoids most of the contamination of the Beck Oil site. (4) The proposed sewer alignment out of the Mojave River encounters contamination from the Former NuWay Dry Cleaners site, located at the intersection of C Street and 8th Street. (5) The project engineer, Tetra Tech, contacted the Lahontan Regional Water Quality Control Board regarding the Former NuWay Dry Cleaners contaminated site, and mitigation was identified which is presented below. Based on this information, VVWRA proposes to install the new sewer pipeline within the 7th Street alignment.

Based on discussions with Tetra Tech (the project engineer), the contractor will have personnel that will be able to manage construction activities in this contaminated area. Refer to the minimization measures listed below which would control potential exposure to significant hazards from having to work within known contaminated sites in the vicinity of 7th and 8th Streets and D Street. These measures are considered sufficient to control exposure to both known and any unknown contaminants within the alignment to a level that will not pose a substantial hazard to workers and adjacent sensitive receptors.

3.3-2 ***The contractor shall develop a health and safety plan describing measures that will be implemented to prevent exposure to workers and other people to vapors or other hazards during construction. In addition, the plan must address the magnitude and extent of these impacts to soil, air, and water with respect to pipeline construction and associated areas. The plan must describe and implement measures that will evaluate construction area conditions daily to protect workers and other people from unhealthy exposures to volatile organic compounds (VOC) in the soil, air and groundwater.***

3.3-3 ***The contractor shall develop a waste characterization and management plan that will address the handling and disposal of soil excavated and any groundwater encountered within the project work areas. All soil excavated will need to be characterized and properly stored, treated and disposed of. Additionally, if dewatering is necessary, measures describing the characterization and management of the water generated are required. Treatment and/or disposal of groundwater may be subject to waste discharge requirements.***

3.3-4 ***The contractor shall possess a valid "HAZ" (Hazardous Substance Removal Certifications) license from the State of California.***

3.4 SOCIOECONOMICS

3.4.1 ZONING AND LAND USE

The project footprint falls within the boundaries of both the City of Victorville and the Town of Apple Valley, with the majority of the project being in the City of Victorville and a small portion along the eastern project boundary located in the Town of Apple Valley. According to the *City of Victorville General Plan Land Use Element* land use and zoning maps, the project boundaries fall within several different land uses including open space/floodplain (including the Mojave River), exclusive agriculture transitional, low density residential, specific plan (SP 1-95), and commercial and public institutional. According to the *City of Victorville General Plan Land Use Element* planning area maps, the project is included within two out of the City's ten planning areas: the North Mojave Planning Area (north of the Mojave River and east of the BNSF rail line) and the Central City Planning Area (south of the Mojave River and west of the BNSF rail line).

No Action Alternative

Under the No Action Alternative, there would be no direct impacts on zoning and land use; however, without implementation of pipeline repair, future flooding events could potentially affect the Upper Narrows temporary pipeline and the Mojave River, which could indirectly impact land uses and the sewered population within the project area. Easements would need to be maintained with the property owners along the existing alignment, including the Lewis Learning Center and BNSF Railway. Therefore, the No Action Alternative would have potential indirect impacts on zoning and land use in the project area.

Alternative 1: In-Kind Repair

Under Alternative 1 the existing alignment of the sewer pipeline remains the same as the original pipeline and the function would also remain the same. No potential for adverse effects on zoning and land use would occur.

Alternative 2: Replacement by HDD, Jack and Bore, Tunneling and Trenching

Under Alternative 2 the new alignment would be deep underground (for the HDD and tunnel segments) and would not affect existing zoning or land uses. The remainder of the sewer pipeline would be installed by trench within existing public roadways or easements. The HDD portals and pipelines will temporarily disturb land currently being farmed on the Kemper-Campbell Ranch (west side of the Mojave River) and there would be approximately one acre of farmland that would be permanently removed from production. Arrangements have been made with the ranch for the required easements. Therefore, Alternative 2 has no potential to conflict with or have a substantial adverse effect on existing zoning and land use with the proposed alignment. Permanent easements would also be required for other property owners along the Alternative 2 alignment, including the City of Victorville.

3.4.2 VISUAL RESOURCES

The existing visual resources of and surrounding the project area include: the Mojave River channel and associated riparian vegetation; the Upper Narrows outcrop of igneous rock; the historic bridge across the Upper Narrows over the Mojave River channel; and the surrounding land uses consisting of agricultural and urban/suburban uses in the adjacent Town of Apple Valley and City of Victorville. The temporary sewer pipeline presently crosses the River channel (between Apple Valley and Victorville) above ground on existing pylons. There are no major unique or important visual resources in the project area.

No Action Alternative

Under the No Action Alternative, there would be no direct impacts on visual resources; however, without implementation of permanent sewer line repair, future flooding events could potentially alter or destroy the existing vegetation and habitat within the project area, which would affect the existing character of the aboveground pipeline alignment and views to and from surrounding areas. Therefore, the No Action Alternative would have potential indirect impacts on visual resources in the project area.

Alternative 1: In-Kind Repair

This alternative would install the replacement sewer pipeline within the same alignment, but below ground level. Short-term visual impacts would be created due to the trenching activities required to support this alternative. Vegetation would be removed along the whole of the alignment, creating a modification in the existing visual setting which consists of a riparian woodland and wetland vegetation. During construction the vegetation would be removed to allow the pipeline to be installed creating an unnatural swath of unvegetated area across the River channel. Equipment would be part of the landscape for the several months required to install the sewer pipeline under this alternative. The equipment would be removed after several months, but the un-vegetated area within the River channel would require several years to return to a visual setting comparable to that which currently exists. Although implementing Alternative 1 would alter the visual resources of the project area, the public does not have a lot of visual access to the project area. It would allow removal of the above-ground temporary pipeline and improve the visual setting as a result. This combined with the existing above ground temporary sewer pipeline makes the proposed short-term visual changes a less than substantial impact to the area's highly modified visual resources.

Alternative 2: Replacement by HDD, Jack and Bore, Tunneling and Trenching

Under Alternative 2 the level of change in the area's visual resources would be substantially reduced when compared to the No-Action Alternative and Alternative 1. The short-term construction activities would affect a much smaller area within the project APE where limited trenching and installation of HDD and tunnel portals activities would occur. For the remainder of the Alternative 2 alignment, the construction activities would be below ground or within existing public roadways. The short-term effects of implementing Alternative 2 on the visual resources of the project area would be less than substantial based on the limited area of above ground impact and the elimination of vegetation removal within the Mojave River channel. Under this alternative the original pipeline will be abandoned in place, including the existing manholes. Thus, no further disturbance, visual or physical, of the original pipeline alignment would occur under this alternative.

3.4.3 NOISE

Noise-sensitive receptors are normally associated with land uses where indoor and outdoor activities may be subject to substantial interference or discomfort from noise. These land uses often include residential dwellings, hotels, hospitals, nursing homes, educational facilities, libraries, and offices. The noise-sensitive land uses in or near the project area include some residences, the wildlife habitat in the Mojave River channel and an educational facility. Local jurisdictions such as the County and the City of Victorville and Town of Apple Valley within which sensitive noise receptors are located use noise quality standards for land use categories based on the now disbanded State of California Office of Noise Control land use compatibility recommendations. These standards follow the Guidelines of California Government Code Section 65302(f) and Health and Safety Code Section 56050.1.

Community Noise Equivalent Level (CNEL)-based standards apply to noise sources whose noise generation is preempted from local control (such as from on-road vehicles, trains, airplanes, etc.). Since local jurisdictions cannot regulate the noise generator, they exercise land use planning authority on the receiving property. Uses that are amenable to local control are generally considered "stationary sources." Local jurisdictions typically regulate the level of noise that one use may impose upon another. The incorporated cities, the jurisdictions within which the nearest receptors are located, utilize a noise standard of 60 dB CNEL as a normally acceptable noise level on the exterior of residential units, with 65 dB CNEL being conditionally acceptable for residential area with certain assumptions.

Noise standards also typically apply to permanent activities. The recommended noise exposure levels are established for permanent noise sources and receptors where noise can be generated over a 24-hour period with penalties applied for permanent noise generated during the night time hours. Construction related noise is short term and generally considered a nuisance source of noise. Construction noise is generally not of sufficient magnitude that it is considered health threatening. No explosives are presently proposed to be used at the project.

Within the project area there are three sources of noise. The BNSF Railway is the primary noise source within the project area. It generates a background CNEL noise level of 70 dBA at 100' from the track; 65 dBA at 215' from the track; and 60 dBA at 420' from the track. Thus, background noise levels of 60 dBA CNEL or greater already affect the Mojave River channel within 420' of the BNSF tracks, which are shown on Figure 3, 4 and 5. The other major source of noise is Highway 18, approximately one-quarter mile from the pipeline alignment within the Mojave River channel. The 60 dBA CNEL contour is located approximately 335' from the Highway 18 bridge over the Mojave River. Thus, it represents a low background level of noise

within the project area. This information is abstracted from the City of Victorville General Plan, Figure 6, Potential Future Noise Contours Central City Planning Area. The final sources of noise are the two above-ground diesel driven pumps that were installed to support the temporary emergency bypass system. These pumps are located near the wash about 100 feet south of the emergency pipeline. They pump 24-hours per day and constitute a stationary source of about 65 dBA CNEL. Due to distance from the Lewis Learning Center, the noise from the diesel engines do not interfere with the learning activities at the Center.

No Action Alternative

Under the No Action Alternative, noise levels would not be impacted. There would be no change in current noise levels as the emergency pumps would continue to operate under this scenario.

Alternative 1: In-Kind Repair

Under Alternative 1 construction noise would be generated within the Mojave River channel and immediately adjacent area. The only noise sensitive receptors in the vicinity of the In-Kind Repair alignment are the Lewis Center in Apple Valley and a few residences in Victorville. The Alternative 1 alignment is buffered on the west by the BNSF Railway Company's railroad tracks. The construction activities are short term and based on the distances to the nearest sensitive noise receptor (more than 300 feet from construction activity) and the noise minimization measures provided below, this short-term change in the noise environment is not considered to be substantially adverse. The following noise minimization measures will be implemented.

3.4.3-1 ***All construction vehicles and fixed or mobile equipment shall be equipped with properly operating and maintained sound attenuating devices such as mufflers.***

3.4.3-2 ***All employees that will be exposed to noise levels greater than 75 dB over an 8-hour period shall be provided with adequate hearing protection devices to ensure no hearing damage will result from construction activities.***

3.4.3-3 ***If equipment is being used that can cause hearing damage at adjacent noise receptor locations (distance attenuation shall be taken into account), portable noise barriers shall be installed that are demonstrated to be adequate to reduce noise levels at receptor locations below hearing damage thresholds.***

3.4.3-4 ***Schedule the construction such that the minimum number of pieces of equipment will be operating at the same time in a project area.***

3.4.3-5 ***Utilize construction methods or equipment that will provide the lowest level of noise impact, i.e., use newer equipment that will generate lower noise levels.***

3.4.3-6 ***Establish a program to inform the local community where construction is scheduled, such as keeping people informed of the schedule, duration, and progress of the construction, to minimize the public objections of unavoidable noise. Communities should be notified in advance of the construction and the expected temporary and intermittent noise increases during the construction period.***

3.4.3-7 ***The construction contractor shall establish a noise and vibration complaint program and post a number at the job site where such complaints can be registered***

Alternative 2: Replacement by HDD, Jack and Bore, Tunneling and Trenching

Alternative 2 has the most sensitive receptors along its northwestern-most segment within the Old Town portion of the City of Victorville. Minimal noise and vibration effects are forecast for the HDD and tunneling segments of the proposed sewer pipeline as the primary source of noise will be buried in a pit or within a tunnel. The effects at the eastern portal in the Town of Apple

Valley would be the same as that identified for Alternative 1. Limited construction noise effects are expected at the Lewis Learning Center due to attenuation over the 300 foot distance between construction activities and the Center. However, for the trenching segment from C Street down to 7th Street and from 7th Street down to the existing sewer line just north of D Street, the 24 hour per day construction activities would occur in the public roadway adjacent primarily to commercial uses, but also some residential uses. At most only a week or so of construction trenching activities would occur directly adjacent to each structure, but noise and vibration levels would be sufficient to exceed 65 dB CNEL at the adjacent structures in Old Town Victorville. Short-term maximum noise levels may reach 85 dB, but due to restricting such noise levels to daylight hours this level of noise, similar to a passing semi-truck, is not considered to be a substantial noise impact. Due to this short term exposure to construction activity and the mitigation measures provided above (minimization measures 3.4.3-1 through 3.4.3-7), the project-related construction noise and vibration effects would be less than substantial.

3.4.4 PUBLIC SERVICES AND UTILITIES

Water/Wastewater

Water service is provided to a majority of the City of Victorville Planning Area by the Victorville Water District (VWD). The sole source of water for the City is the groundwater Alto Subbasin of the Mojave Groundwater Basin. Wastewater disposal in the City's Planning Area is primarily handled by the VVWRA. The VVWRA is the primary liquid waste disposal facility serving the Planning Area. The reclamation plant is located at 20111 Shay Road on an approximately 300 acre site, and designated in the Land Use Plan as 'Open Space'[2].

In the Town of Apple Valley, there are several public and private water purveyors serving the town, the two largest of which are Apple Valley Ranchos Water Company and Golden State Water Company. The local wastewater collection system is owned, operated and maintained by the Town of Apple Valley, with wastewater collected via force main lines and gravity sewer lines, and conveyed to the VVWRA treatment plant in Victorville via two regional interceptor lines. It was the irreversible damage to the Upper Narrows interceptor that has resulted in the need to restore permanent infrastructure that was damaged by disaster by maintaining wastewater flows from Apple Valley to the VVWRA Westside WRP.

Electricity/Natural Gas/Telephone/Cable

Electricity is provided to both the City of Victorville and the Town of Apple Valley by Southern California Edison (SCE). Southwest Gas (SWG) provides natural gas service to both the City of Victorville and the Town of Apple Valley. Verizon provides local telephone services in the City of Victorville and the Town of Apple Valley. Charter Communications provides telephone service, as well as cable television and high-speed Internet, to the City of Victorville and most areas of Apple Valley.

Solid Waste

Non-hazardous solid waste generated in the Victor Valley Planning Area is currently deposited in the Victorville Landfill, which is operated by the County of San Bernardino. This landfill is located at 17080 Stoddard Wells Road in the northeastern quadrant of the City, and designated in the Land Use Plan as 'Specific Plan'. This designation ensures that any development in the

[2] City of Victorville General Plan Land Use Element, p. LU-16.

northeast quadrant would be planned in consideration of surrounding properties, and that required infrastructure would be master planned with adjoining areas[3].

The Town of Apple Valley maintains a contract for solid waste and recycling services with Burrtec Waste Industries of Fontana, California. Burrtec collects solid waste, including nonhazardous industrial waste, from Apple Valley and transports it approximately 12 miles to the Victorville landfill located to the northwest of the Town. The landfill is part of the San Bernardino County landfill system. The County has acquired additional acreage at the landfill to expand capacity. Based on this expansion, the Victorville landfill is estimated to have a closing date of 2047[4].

Airports

There are no airports located within the immediate vicinity of the project. Southern California Logistics Airport (SCLA), a commercial aviation center, is located approximately 6 miles northwest of the project site, and Apple Valley Airport, a small general aviation airport, is located approximately 6.5 miles northeast of the project site. The project site is not located within the noise contours or safety zones of either of these airports.

Fire Protection Services

Fire protection within the City of Victorville is provided by San Bernardino County Fire Department (SBCFD), North Desert Division. Within the City limits, four (4) fire stations are manned and operated by SBCFD. A fifth station is located at SCLA. In addition, three (3) County fire stations are located within the City's existing Sphere Of Influence, providing fire protection services to the City and adjacent unincorporated areas. For response times, the City Council goal is to have the first on scene unit arrive within five minutes. The current average response time is 6.73 minutes, with rescue, traffic accidents and medical responses taking an average of 6.18 minutes, fires, explosions, and hazardous conditions taking an average of 7.06 minutes, and false alarms and investigations taking an average of 7.31 minutes to respond[5].

The Apple Valley Fire Protection District (AVFPD) serves the Town of Apple Valley as well as other high desert communities, including those portions of unincorporated San Bernardino County that are within its approximately 206-square mile service area. AVFPD maintains and is responsible for staffing seven fire stations in Apple Valley. The AVFPD maintains a mutual aid agreement with the City of Victorville Fire Department, San Bernardino County Fire Department, and the Bureau of Land Management. The mutual aid agreements provide a mechanism for coordinated strategic and facilities planning between fire departments in the region to actively support one another regardless of geographic or jurisdictional boundaries. A joint dispatch center is located in Victorville that serves the mutual aid agencies[6].

Police Services

Police service in Victorville is provided by the San Bernardino County Sheriff's Department, and operations take place out of the Victorville Police Headquarters and four satellite facilities. Victorville contracts for 80 sworn officers and 22 non-sworn positions. Victorville's police average response time to emergency calls in 2004 was 3.4 minutes[7].

---

[3] City of Victorville General Plan Land Use Element, p. LU-16.
[4] Town of Apple Valley General Plan Public Buildings and Facilities Element, V-7, V-8.
[5] City of Victorville General Plan Safety Element, p. S-21.
[6] Town of Apple Valley General Plan Public Buildings and Facilities Element, p. V-16.
[7] City of Victorville General Plan Safety Element, p. S-21.

Police services are provided to the Town of Apple Valley through a contractual agreement with the San Bernardino County Sheriff's Department. The Sheriff's Department assigns staff to the Apple Valley Police Department within the approximately 72 square miles that are encompassed by the Town's corporate limits. The Sheriff's Department also serves unincorporated areas in the vicinity of Apple Valley, including the Town's Sphere of Influence. The Apple Valley Police Department is located in the Apple Valley Civic Center at 14931 Dale Evans Parkway in Apple Valley. There is also an un-staffed sub-station used for report writing and other administrative tasks, which is located at 21989 Outer State Highway 18[8].

Medical Services

Medical services are provided to the City of Victorville Planning Area residents by three local hospitals, as well as several urgent care centers and individual doctors' offices. The local hospitals include Desert Valley Hospital on Bear Valley Road in the East Bear Valley Planning Area, Saint Mary Regional Medical Center on Highway 18 in Apple Valley, and Victor Valley Community Hospital on Eleventh Street in the Central City Planning Area[9].

The main hospital facility within the Town of Apple Valley is St. Mary Medical Center on Highway 18, as well as several individual doctors' offices and one urgent care center[10].

No Action Alternative

Under the No Action Alternative, the public services and facilities discussed above would not be impacted by routine demand for such services; however, without implementation of permanent sewer facility repairs, future flooding events could potentially result in adverse impacts to public services and facilities in the project area by creating a demand for such services to assist in managing the emergency caused by such a failure.

Alternative 1: In-Kind Repair

Under Alternative 1 the public services and facilities discussed above would not be impacted, except during an emergency, when police or fire emergency services may be required to respond. Since emergency events create random demand for public services, there is no continuous or substantial demand for public services during construction or operation of the Alternative 1 sewer pipeline. This alternative would generate demand for solid waste management, either waste requiring disposal in the municipal landfill or green waste requiring shredding and composting, including disposal of the temporary pipeline and supports.

Alternative 2: Replacement by Tunneling

Under Alternative 2 the public services and facilities discussed above would not be impacted, except during an emergency, when police or fire emergency services may be required to respond. Since emergency events create random demand for public services, there is no continuous or substantial demand for public services during construction or operation of the Alternative 2 sewer pipeline. This alternative would generate demand for solid waste management, either waste requiring disposal in the municipal landfill or very limited amounts of green waste requiring shredding and composting, including disposal of the temporary pipeline and supports.

[8] Town of Apple Valley General Plan Public Buildings and Facilities Element, p. V-17.
[9] City of Victorville General Plan Safety Element, p. S-22.
[10] Town of Apple Valley General Plan Public Buildings and Facilities Element, p. V-19, V-20.

3.4.5 TRAFFIC AND CIRCULATION

The project area is located in proximity to major roadways within the City of Victorville and Town of Apple Valley. The I-15 freeway runs in a northeasterly direction approximately 0.75 miles to the west of the project footprint. State Route 18 (SR-18) is a four-lane divided highway with turn lanes in the Town of Apple Valley, where it is also called Happy Trails Highway, and a four-lane divided road with a continuous left-turn lane through most of the City of Victorville (D Street)[11]. SR-18 and D Street are designated truck routes in the City of Victorville. Also within the project footprint is the Historic Route 66, which shares the alignment with D Street in the City of Victorville from 7th Street west to the I-15 freeway, where it then follows the National Trails Highway alignment past the city border onward. According to the City of Victorville and Town of Apple Valley General Plans all roadways in the vicinity of the project operate at acceptable levels of service during the morning and evening peak hours.

No Action Alternative

Under the No Action Alternative, no impacts would occur with regard to traffic and circulation as no new traffic would be generated.

Alternative 1: In-Kind Repair

Under Alternative 1 none of the proposed sewer pipeline segments would be located within existing roadways. Thus, no potential exists to affect traffic flow on the local circulation system during construction. The only effect on the circulation system would be from worker and equipment/material delivery to the project site. It is estimated that the maximum number of workers on the site during construction would be 40 persons. The maximum number of equipment/material deliveries to the site is estimated to be 10 per day. Total number of trips on the local circulation system is approximately 100 per day. Of these, approximately 40 trips are forecast to occur within the peak hour. This number of trips on the local roadway during peak hour is below the threshold that would trigger a traffic study. No substantial circulation system effects would occur from implementing this alternative. Long-term trip generation is forecast to be about one or two trips per day (maintenance and inspections), well below any threshold that could adversely affect the area circulation system.

Alternative 2: Replacement by Tunneling

The majority of Alternative 2 would occur outside of any existing roadway and the circulation system effects from implementing this alternative are estimated to be the same as for Alternative 1. The difference for Alternative 2 is that the western-most segment, where trenching is proposed, would occur within existing roadways, C and 7th Streets. At this location a potential exists for roadway trench construction activities to adversely affect the flow of traffic and emergency access to individual properties. To minimize disturbance, VVWRA would carry out trenching activities 24 hours per day. This would minimize the amount of time construction activities would occur in front of each property. In addition access to many of the properties can be obtained from back allies for short periods. It is estimated that approximately 72 hours would be required to complete construction in front of each property once construction is initiated. To ensure access during this construction, the following minimization measure will be implemented.

3.4.5-1 A traffic control plan shall be prepared by VVWRA or the contractor which includes measures to ensure emergency access to all properties that front on the roadways where the sewer pipeline will be installed. This plan shall be reviewed and approved by the City of Victorville.

[11] City of Victorville General Plan Circulation Element, p. C-8.

Under Alternative 2 trip generation during operations would be about two trips per day similar to Alternative 1. This level of trip generation has no potential to adversely affect the circulation system.

3.4.6 ENVIRONMENTAL JUSTICE – EXECUTIVE ORDER 12898

All projects involving a federal action (funding, permit, or land) must comply with Executive Order (EO) 12898, *Federal Actions to Address Environmental Justice in Minority Populations and Low-Income Populations*, signed by President Clinton on February 11, 1994. This EO directs federal agencies to take the appropriate and necessary steps to identify and/or address disproportionately high and adverse effects of federal projects on the health or environment of minority and low-income populations to the greatest extent practicable and permitted by law. Low income is defined based on the Department of Health and Human Services poverty guidelines. For 2010, this was $22,050 for a family of four[12]. All considerations under Title VI of the Civil Rights Act of 1964 and related statutes have also been included in this project.

The *Final Guidance For Incorporating Environmental Justice Concerns in EPA's NEPA Compliance Analyses* (April 1998) states a minority or low-income population is considered substantial when more than 50 percent of the affected population are minority and/or low-income, or when the affected population has a minority or low income percentage that is meaningfully greater than the percentage of minority or low-income people in the general population, or other appropriate unit of geographic analysis. The two basic steps in an environmental justice analysis include the assessment of: (1) whether the potentially affected community has a substantial minority population, low-income population, or Indian tribe; and (2) whether the environmental impacts are likely to fall disproportionately on an identified minority population, low-income population, and/or Indian tribe.

Socioeconomic and demographic data from U.S. Census Bureau for residents in the project vicinity were studied for the preparation of this EA. Data from the 2010 Census and 2009 American Community Survey[13] indicated that a disproportionate number (defined as greater than 50 percent) of minority or low-income persons live in the vicinity of the project site. All adverse impacts from installing the replacement pipeline would be temporary and negligible. The Proposed Action would benefit residents, employees, and visitors in the City of Victorville by repairing the Upper Narrows pipeline and reducing the threat of future sewage releases into the Mojave River. Therefore, the Proposed Action complies with EO 12898 and its implementation would result in no disproportionately high and adverse human health effects upon minority or low-income populations.

[12] http://aspe.hhs.gov/POVERTY/10poverty.shtml, accessed 8-22-11.
[13] http://factfinder2.census.gov/ accessed 8-22-11

3.5 CULTURAL RESOURCES

3.5.1 HISTORICAL PROPERTIES

The National Historic Preservation Act of 1996 (NHPA), as amended, sets forth national policy and procedures regarding historic properties, defined as districts, sites, buildings structures and objects included in or eligible for the National Register of Historic Places (NRHP). Section 106 of NHPA requires federal agencies to take into account the effects of their undertakings on such properties and to allow the Advisory Council on Historic Preservation the opportunity to comment on those undertakings, following regulations issued by the Advisory Council on Historic Preservation (36 CFR 800).

Federal agencies are required to consult with the State Historic Preservation Officer (SHPO) under Section 106 if a potential exists to adversely impact cultural resources. A detailed evaluation of historic properties has been prepared for the proposed project by CRM TECH. This evaluation is provided as Appendix 6 to this Environmental Assessment. FEMA initiated consultation with SHPO on October 16, 2012. SHPO responded on December 27, 2012 and indicated that based on the information available, the SHPO could not concur with FEMA's finding and recommendation of No Adverse Effect. In response to this finding, FEMA requested additional information be submitted to SHPO from CRM TECH and the local Native American tribal representatives. This additional information was provided to SHPO by the end of January 2013. Subsequently (March 4, 2013), SHPO revised its finding to concur with the FEMA finding and recommendation. Thus, the SHPO consultation has been completed and a "no effect" finding has been concurred in by the SHPO. The SHPO documentation is also provided in Appendix 6.

The proposed action involves construction activities that could adversely impact cultural resources. Through the use of these alternative construction methods and onsite mitigation/ monitoring measures, the project has been able to avoid areas that contain significant cultural resources. The following is a summary of the findings on cultural resources that occur within the project's area of potential effect (APE) or project vicinity.

Between June and September, 2011, at the request of Tom Dodson and Associates, CRM TECH performed a cultural resources survey on the Area of Potential Effects (APE) for the Upper Narrows Pipeline Replacement Project in the City of Victorville and the Town of Apple Valley, San Bernardino County, California. The undertaking proposes to install a new sewer interceptor line to restore the function of an existing line that was damaged by winter storms in 2010. The APE is delineated to encompass the maximum extent of ground disturbance required for the construction of the new sewer line as well as the location of the existing line to be abandoned (Alternative 1), and includes approximately 2.3 linear miles of pipeline rights-of-way and four construction staging areas measuring approximately 10.46 acres in total: 1 acre at Lewis Learning Center, 7.8 acres at Kemper Campbell Ranch, 1.5 acres adjacent to 7th Street and D Street, and 0.16 acres adjacent to C Street between 8th Street and Hesperia Road. The entire APE lies within Section 10, T5N R4W, San Bernardino Baseline and Meridian.

The study is a part of the environmental review process for the proposed undertaking, as required….by FEMA in compliance with Section 106 of the National Historic Preservation Act. The purpose of the study is to provide VVWRA, FEMA, and other responsible public agencies with the necessary information and analysis to determine whether the proposed undertaking

would have an effect on any "historic properties," as defined by 36 CFR 800.16(l), or "historical resources,"….

In order to accomplish the objective of the study, CRM TECH conducted a historical/archaeological resources records search, pursued historical and geomorphologic background research, contacted Native American representatives, and carried out a systematic field survey. As a result of the records search procedures, eight previously recorded historical/archaeological sites were found to be located partially within the APE, including four prehistoric sites, three linear features of historical origin, and a bridge. These eight sites are listed below:

Site No.	***Description***
36-000060	*Prehistoric habitation site*
36-000063	*Prehistoric habitation site*
36-000968	*Native American burial site*
36-002910	*Former U.S. Route 66/National Old Trails Highway*
36-003033	*Mojave Trail*
36-006793	*Atchison, Topeka and Santa Fe (ATSF) Railway*
36-013879	*Prehistoric habitation site*
36-014171	*Rainbow Bridge*

During the field survey, three bedrock milling features and a few lithic and faunal artifacts were recorded within the previously established site boundary of 36-000063. No features or artifacts associated with the other three prehistoric sites were observed within the APE, and no physical remains were found of 36-003033, the historic Mojave Trail. The other three historic-period sites, 36-002910 (Route 66), 36-006793 (ATSF Railway), and 36-014171 (Rainbow Bridge), were found to be present at their recorded locations and in use as parts of the modern transportation system.

No Action Alternative

The No Action Alternative would not disturb any ground and has no potential to cause any adverse impacts to cultural resources.

Alternative 1: In-Kind Repair

Under Alternative 1 the trenching activity would follow the existing pipeline alignment as shown on Figure 3. This alignment was previously trenched to install the original sewer pipeline that was irreversibly damaged. Re-trenching the In-Kind Repair alignment has a low potential to encounter any cultural resources with any remaining integrity. Regardless, Alternative 1 has a potential to accidentally expose unknown cultural resources. In accordance with the Cultural Report recommendation, the following minimization measures will be implemented.

3.5-1 ***In order to properly identify, evaluate and, if necessary, protect potentially significant subsurface cultural deposits, an archaeological monitoring program shall be implemented during all earth-moving operations impacting the top ten feet of sediments except along the paved roadways, where monitoring should commence upon reaching native soils beyond the roadbed fill. This measure includes the commitments VVWRA and the Native Americans reached under the "Memorandum of Understanding, San Manuel Band of Mission Indians and Victor Valley Wastewater Reclamation Authority" in October 2012.***

3.5-2 ***In the unlikely event that cultural materials are encountered within sediments that do not require monitoring, all work in that area shall be halted or diverted until a qualified archaeologist can evaluate the nature and significance of the finds.***

Operational activities have no potential to adversely impact cultural resources. In accordance with agreements between VVWRA and FEMA and the recommendation from CRM TECH, VVWRA consulted with the San Manuel Tribe of Luiseno Indians and reached agreement for Native American monitors for all ground disturbing activities associated with Reach 1 and for repatriation of any Native American artifacts or human remains that might be encountered during construction. A copy of this “Memorandum of Understanding” is not available to the public but can be reviewed with approval of the San Manuel Tribe. Based on the commitments to work with the local Native Americans, the State Historic Preservation Office has concurred that implementation of the proposed action, either Alternatives 1 or 2, that implementation of the proposed undertaking will not cause an adverse effect on any "historic properties" or "historical resources."

Alternative 2: Replacement by HDD, Jack and Bore, Tunneling and Trenching

The majority of construction activities (HDD and tunneling) would occur at such depths in the Mojave River channel that no potential exists to adversely impact human cultural resources. Above ground disturbance under Alternative 2 would occur where trenching occurs; where portals would be installed; and at the staging areas. Based on the findings of the cultural survey, the only potential for adverse cultural resource effects is the potential to accidentally discover subsurface cultural resources. Implementation of mitigation measures 3.5-1 and 3.5-2 and the MOU with the San Manuel would ensure that any accidentally discovered cultural resources and properly managed and cultural resource impacts are controlled to a less than substantial level.

The specific summary provided in Appendix 6 states: As currently proposed, much of the undertaking will be carried out through underground tunneling at depths well below the surface cultural features and the known subsurface archaeological deposits, while the portion of the undertaking along the existing sewer line consists only of the abandonment of the damaged pipeline. At the staging areas, no subsurface disturbance is anticipated from the undertaking. In light of their locations outside the vertical extent of the APE or in areas where no ground disturbance or construction will occur, it is determined that the undertaking has no potential to affect the significance or integrity of seven of the eight sites listed above, namely 36-000060, 36-000063, 36-000968, 36-003033, 36-006793, 36-013879, and 36-014171.

The eighth site, 36-002910, represents a famed old highway that was previously determined to qualify as a "historic property" and a "historical resource." Current project plans call for trenching along a small segment of the site near the northwestern end of the APE for the installation of the replacement pipeline if the Seventh Street alternative is selected. Although the historic value and legendary status of Route 66 are well documented, the physical manifestation of the site is now a modern highway under constant use, and its appearance reflects much more the results of repeated upgrading and maintenance in recent decades than the heyday of "the Mother Road." As working elements of the modern infrastructure, the physical components of the site in the APE do not contribute to its significance or integrity. Therefore, 36-002910 will not be adversely affected by the undertaking.

In summary, despite the presence of eight known historical/archaeological sites in the APE, implementation of the proposed undertaking will not cause an adverse effect on any "historic properties" or "historical resources." Nevertheless, the presence of the known prehistoric sites in a relatively concentrated cluster in and near the APE, including several with buried components, suggests a heightened probability for similar cultural remains to be encountered in subsurface deposits at elevations above the Mojave River bed. Representatives of local Native American groups have also expressed concerns over archaeological remains in the APE due to

its location on the Mojave River. Furthermore, the geomorphologic profile of the area indicates that conditions conducive to long-term prehistoric habitation exist in the APE, and the records search reveals that prehistoric sites have been reported in the surrounding area in the same or a similar geomorphologic context as the APE.

The deeper sediments within the APE, generally beyond ten feet below the ground surface, are estimated to be as much as 10,000 years old, by far predating the proliferation of Native American settlements in the Victor Valley, and are therefore unlikely to yield archaeological deposits. Meanwhile, the surface soils within the paved roadways in the APE, generally to the depth of five feet, consist of roadbed fill, where the likelihood of encountering any potentially significant archaeological remains has been greatly reduced by extensive past disturbances. The sediments between five and ten feet in depth within the roadways and the top ten feet of sediments elsewhere in the APE, therefore, should be considered sensitive for buried archaeological deposits of prehistoric origin.

Based on these findings, CRM TECH presents the following recommendations to VVWRA, FEMA, and other responsible public agencies:

- *In order to properly identify, evaluate and, if necessary, protect potentially significant subsurface cultural deposits, an archaeological monitoring program should be implemented during all earth-moving operations impacting the top ten feet of sediments except along the paved roadways, where monitoring should commence upon reaching native soils beyond the roadbed fill.*

- *In the unlikely event that cultural materials are encountered within sediments that do not require monitoring, all work in that area should be halted or diverted until a qualified archaeologist can evaluate the nature and significance of the finds.*

Under these conditions, the proposed undertaking may be cleared to proceed in compliance with Section 106 and CEQA provisions on cultural resources.

3.6 CUMULATIVE IMPACTS

Cumulative impacts are the impacts on the environment, which result from the incremental impact of the Proposed Action when added to other past, present, and reasonable future actions regardless of the person or group that undertakes the other actions. Almost all impacts associated with the proposed action are caused or generated by construction activities. Therefore, project contributions to cumulative impacts are short-term and generally less than significant.

There are no other projects within the local visual setting that would contribute to a cumulatively considerable change in the visual setting. Air emissions from constructing the project are less than regional thresholds for substantial adverse impacts. Therefore, the proposed action has no potential to cause a substantial cumulative air quality impact. The proposed action is not forecast to cause substantial biological resource impacts, including wetlands or listed species based on avoiding all riparian resources within the Mojave River channel through installation of the pipeline using HDD. Therefore, the project cannot contribute to substantial cumulative biological resources effects. The same finding was made for cultural resources. The proposed action would not adversely impact any cultural resources and therefore, it also cannot contribute to substantial cumulative effects on such resources.

Due to the limited new impervious surface and mitigation requiring control of water quality degradation during construction, the project would not cause a substantial increase in downstream flood hazards or water quality. Noise effects would be cumulatively additive to background sound levels, but the short-term effects combined with mitigation indicates that the proposed action would not cause substantial cumulative effects. No adverse effects are forecast for public services and utilities. The proposed action would generate traffic but due to the small volume (total 100 trips per day maximum), which would be spread over the whole day, the effect on the circulation system would be less than cumulatively considerable.

No other issues were identified with potential cumulative impacts from implementing the proposed action.

4 SUMMARY OF MITIGATION MEASURES

The following Federal permits, reviews, and approvals may be required for project construction:

Agency	Permit/Approval	Status
U.S. Fish and Wildlife Service (USFWS)	Section 7 Consultation for Threatened and Endangered Species Review	Concluded, no permit needed if management measures are implemented. A copy of this letter is provided in Appendix 5.
California Water Resources Board	National Pollutant Discharge Elimination System nonpoint source discharge permit	Pending initiation of construction
State Historic Preservation Office (SHPO)	Approval/concurrence with cultural resources findings	Concluded, concurrence with findings provided by SHPO. A copy of this letter is provided in Appendix 6.

Water Resources and Water Quality

3.1.2-1 ***VVWRA shall require that the construction contractor prepare and implement a Storm Water Pollution Prevention Plan (SWPPP) which specifies Best Management Practices (BMPs) that will prevent all construction pollutants from contacting stormwater and with the intent of keeping all products of erosion from moving offsite into receiving waters. The SWPPP shall include a Spill Prevention and Cleanup Plan that identifies the methods of containing, cleanup, transport and proper disposal of hazardous chemicals or materials accidentally released during construction activities that are compatible with applicable laws and regulations. BMPs to be implemented in the SWPPP may include but not be limited to***

- ***the use of silt fences;***
- ***The use of temporary stormwater desilting or retention basins;***
- ***The use of water bars to reduce the velocity of stormwater runoff so that sediment is not transported offsite;***
- ***The use of wheel washers on construction equipment leaving the site***
- ***The washing of silt from public roads at the access point to the site to prevent the tracking of silt and other pollutants from the site onto public roads.***
- ***The storage of excavated material shall be kept to the minimum necessary to efficiently perform the construction activities required. Excavated or stockpiled material shall not be stored in water courses or other areas subject to the flow of surface water.***
- ***Where feasible, stockpiled material shall be covered with water proof material during rain events to control erosion of soil from the stockpiles***

3.1.2-1 ***VVWRA shall require that the construction contractor prepare a "frack out" response plan that will identify specific methods for determining a frack out has occurred; the methods to contain any materials released into the environment; the methods to repair the frack out location; and the remediation measures required to clean-up any areas of the environment contaminated by frack out material.***

Air Resources and Air Quality

3.1.5-1 ***Water active grading sites and dirt haul roads at least twice daily and more often when fugitive dust is observed migrating from the construction site.***

3.1.5-2 ***Suspend all grading and excavation operations when wind speeds exceed 25 mph as measured onsite or at the Southern California Logistics Airport.***

3.1.5-3 ***Enclose, cover, or water twice daily or apply non-toxic soil binders to any onsite stockpiles of debris, dirt or other dusty material.***

3.1.5-4 ***Hydro-seed with a native plant seed mix, apply non-toxic chemical soil stabilizers or otherwise stabilize any cleared areas which are to remain inactive from more than 10 days after clearing is completed.***

3.1.5-5 ***Sweep any paved access points daily of any visible dirt deposition or any public roadway.***

3.1.5-6 ***Reduce and control traffic speeds on unpaved roads to less than 15 mph.***

3.1.5-7 ***All equipment shall be properly tuned and maintained in accordance with the manufacturer's specifications to minimize nitrogen oxide emissions.***

3.1.5-8 ***Require 90-day low NOx tune-ups for off-road equipment.***

3.1.5-9 ***During construction, trucks and vehicles in loading and unloading queues shall be kept with their engines off when not in use.***

3.1.5-10 ***Encourage car pooling for construction workers.***

3.1.5-11 ***Limit lane closures to off-peak travel periods, when possible.***

3.1.5-12 ***Encourage receipt of materials during non-peak traffic hours.***

Biological Environment

3.2.1-1 ***No above-ground work will occur within riparian habitat and no riparian vegetation will be removed.***

3.2.1-2 ***The only above-ground work within reaches 1A and 1B will occur at the portals of the horizontal direction drilling sites located in previously disturbed areas outside of the riparian habitat boundaries.***

3.2.1-3 ***No activity will occur within reaches 1-A and 1-B during the nesting season from March 15 through September 15.***

3.2.1-4 ***An approved biological monitor will be retained by VVWRA. The biological monitor must be knowledgeable about LBVI, SWWF and desert tortoise biology and ecology. At least 7 days prior to initiating project activities, VVWRA shall submit in writing the name(s), permit numbers, and resumes of all proposed biological monitors to the U. S. Fish and Wildlife Service (USFWS). Project-related ground disturbance shall not begin until a biological monitor has been approved by the USFWS. During construction, if there is to be any vegetation clearing, the biological monitor will conduct a pre-construction sweep of the work area (where habitat is suitable) to ensure that no sensitive species such as LBVI, SWWF and desert tortoise are present. The biological monitor will be onsite during any vegetation clearing and will conduct weekly site inspections during the remainder of construction within areas that contain suitable habitat. The biological monitor will have the authority to halt or suspend any project-related activities that are not in compliance with State or federal laws.***

3.2.1-5 ***The biological monitor will conduct orientation meetings for all construction personnel, including temporary contractors that include: a) a description of LBVI, SWWF and desert tortoise and their***

respective habitats on the project site; b) the limits of construction; and c) the conservation measures to be implemented in conjunction with project construction. The orientation shall also include information regarding sensitive species known to occur in the near vicinity of the project. The class shall also provide relevant information regarding the Federal and State laws and worker responsibilities when working adjacent to or in riparian habitat. All employees will received handouts summarizing the class information and will be required to sign an acknowledgment of attending the class and committing to implement measures to reduce impacts on biological resources.

3.2.1-6 All project activities will be limited to a well-defined area. Prior to construction activities commencing, the limits of disturbance will be clearly marked with stakes and orange construction barrier fencing.

3.2.1-7 VVWRA shall make every effort to conduct above-ground construction within Reaches I-A and I-B between September 15 and March 15 to avoid the bird nesting season. If not possible, VVWRA will have the biological monitor survey Reaches I-A and I-B on a weekly basis during breeding season for LBVI and SWWF within 500 feet of the construction footprint beginning after March 15 and continuing through September 15, or until such date that it becomes evident that LBVI and/or SWWF have left the survey area. The biologist will identify and monitor the location of territories and observe for behavior such as nest building, egg incubation, brood rearing, and nest or parasitism within the 500 foot zone from the construction footprint.

3.2.1-8 A qualified individual with the proper equipment will ensure that appropriate noise abatement measures are implemented and will conduct weekly breeding season noise monitoring at active construction locations adjacent to LBVI and/or SWWF territories to determine whether noise levels within 50 feet of territories are greater than 60 dBA Leq.

3.2.1-9 Construction noise will be minimized through installation and use of noise-reducing equipment in all construction vehicles, and reducing speed limits for travel within the Mojave River floodplain to 10 miles per hour. In the event that noise is consistently greater than 60 dBA Leq within 50 feet of a LBVI and/or SWWF territory, sound barriers shall be erected in the work area in discrete locations, around the specific stationary equipment, such as the HDD drill rig, the Bore and Jack pits, and the tunnel pits, to allow construction to proceed within a buffer zone.

3.2.1-10 Although no desert tortoise were detected during protocol surveys, habitat near the portals and staging areas is considered marginally suitable for this species. Therefore, a qualified biologist shall conduct one pre-construction clearance survey within 30 days prior to initiating construction. Following the pre-construction survey, the biologist will make a determination: (1) if a biological monitor should be present at the site during all clearing and grubbing activities above grade; (2) if desert tortoise fencing needs to be installed around the perimeter of the construction work zone; or (3) if no further action is required. The biologist/monitor should remain on-call during construction activities to respond to a circumstance where a desert tortoise wanders into the construction area.

In the unlikely event a desert tortoise is encountered during construction, no person including the biologist shall touch the animal. Instead, the biologist will observe the area to see if the desert tortoise has an established burrow or if it just wandering through the site. Construction within the area of the tortoise shall cease and the biologist will contact the USFWS and FEMA to coordinate with them and to receive instruction. Above grade disturbance activities shall not commence until the biologist has implemented the required measures according to the two agencies to clear the site and recommence construction activities.

3.2.1-11 Impacts to nesting bird species are prohibited under the Federal Migratory Bird Treaty Act (MBTA). The MBTA makes it unlawful to take, possess, buy, sell, purchase, or barter any migratory bird listed in 50 CFR Part 10, including feathers or other parts, nests, eggs, or products, except as allowed by implementing regulations (50 CFR 21). Suitable nesting bird habitat has been documented within and immediately adjacent to the proposed action area. Therefore, to remain in compliance with the MBTA, nesting bird surveys will be conducted within and adjacent to the action area prior to and during all proposed actions conducted between February 15 and September 15.

3.2.1-12 ***Prior to conducting any proposed actions during the breeding season (March 15 through September 15), the monitoring biologist will conduct a pre-construction survey/surveys to identify any active nesting locations in and near the project area no more than three days prior to project initiation, clearing and grubbing. If the biologist does not find any active nests that would be potentially impacted, the proposed action may proceed. If the biologist finds an active nest within or adjacent to the action area and determines that the nest may be impacted, the biologist will delineate an appropriate buffer zone to be fenced off with orange construction fencing around the nest. Any active nests observed during the survey will be mapped on a recent aerial photograph, including documentation of GPS coordinates. Only specified activities (if any) as approved by the qualified biologist, will take place within the buffer zone until the nest is vacated.***

3.2.1-13 ***The proposed action area is located adjacent to a few large Fremont's cottonwood trees favored by raptors. Surveys for active raptor nests will be performed in all adjacent habitats and trees no more than three days prior to commencement of any activities during raptor nesting season, February 1 through June 30. Active raptor nests observed during the survey will be mapped on a recent aerial photograph include documentation of GPS coordinates. Restrictions in construction activities may be required in the vicinity of the nest until the nest is no longer active as determined by the qualified biologist. Typically, a buffer zone will be designated around a nest to allow activities to proceed while minimizing disturbance to the active nest. Once the nest is no longer active, the proposed action may proceed within the buffer zone. Impacts on active raptor nests shall be avoided.***

3.2.1-14 ***Prior to discharge of fill or streambed alteration of jurisdictional areas, the project proponent shall obtain regulatory permits from the U.S. Army Corps of Engineers, Lahontan Regional Water Quality Control Board and the California Department of Fish and Wildlife. Mitigation can be provided by purchasing into any authorized mitigation bank; by selecting a site of comparable acreage near the site and enhancing it with a native riparian habitat or invasive species removal in accordance with a habitat mitigation plan approved by regulatory agencies; or by acquiring sufficient compensating habitat to meet regulatory agency requirements. Typically, regulatory agencies require mitigation for jurisdictional waters without any riparian or wetland habitat to be mitigated at a 1:1 ratio. For loss of any riparian or other wetland areas, the mitigation ratio will begin at 2:1 and the ratio will rise based on the type of habitat, habitat quality, and presence of sensitive or listed plants or animals in the affected area. A revegetation plan using native riparian vegetation common to the project area where riparian or wetland habitat will be affected shall be prepared and reviewed and approved by the appropriate regulatory agencies. The project proponent will also obtain permits from the regulatory agencies (Corps, Lahontan RWQCB, and CDFW) if any impacts to jurisdictional areas will occur. These agencies can impose greater mitigation requirements in their permits, but the VVWRA will utilize the ratios outlined above as the minimum required to offset or compensate for impacts to jurisdictional waters, riparian areas or other wetlands.***

Invasive Species – Executive Order 13112

3.2.3-1 ***Prior to delivery of all construction equipment for Reaches 1 and 2 to the project site, the equipment shall be washed and sterilized at a designated location outside of the project area. The contractor shall provide documentation that mobile equipment delivered to the site to support trenching activities has been washed and sterilized prior to delivery to the project site.***

Hazardous Materials

3.3-1 ***If an accidental release occurs, the cleanup of petroleum products is regulated by State and local regulations that have been determined to be adequate to reduce the risk of exposure of humans to an acceptable level. Mitigation Measure 3.1.2-1 requires the preparation and implementation of a Storm Water Pollution Prevention Plan (SWPPP). The purpose of the SWPPP is to prevent the contamination of stormwater during construction activities. The SWPPP shall include a Spill Prevention and Cleanup Plan which establishes the methods that must be implemented to minimize the potential for the spill of hazardous substances, as well as methods of containing, cleaning up and disposing of hazardous materials in the event of an accidental release of such materials.***

3.3-2 ***The contractor shall develop a health and safety plan describing measures that will be implemented to prevent exposure to workers and other people to vapors or other hazards during construction. In addition, the plan must address the magnitude and extent of these impacts to soil, air, and water with respect to pipeline construction and associated areas. The plan must describe and implement measures that will evaluate construction area conditions daily to protect workers and other people from unhealthy exposures to volatile organic compounds (VOC) in the soil, air and groundwater.***

3.3-3 ***The contractor shall develop a waste characterization and management plan that will address the handling and disposal of soil excavated and any groundwater encountered within the project work areas. All soil excavated will need to be characterized and properly stored, treated and disposed of. Additionally, if dewatering is necessary, measures describing the characterization and management of the water generated are required. Treatment and/or disposal of groundwater may be subject to waste discharge requirements.***

3.3-4 ***The contractor shall possess a valid "HAZ" (Hazardous Substance Removal Certifications) license from the State of California.***

Noise

3.4.3-1 ***All construction vehicles and fixed or mobile equipment shall be equipped with properly operating and maintained sound attenuating devices such as mufflers.***

3.4.3-2 ***All employees that will be exposed to noise levels greater than 75 dB over an 8-hour period shall be provided with adequate hearing protection devices to ensure no hearing damage will result from construction activities.***

3.4.3-3 ***If equipment is being used that can cause hearing damage at adjacent noise receptor locations (distance attenuation shall be taken into account), portable noise barriers shall be installed that are demonstrated to be adequate to reduce noise levels at receptor locations below hearing damage thresholds.***

3.4.3-4 ***Schedule the construction such that the minimum number of pieces of equipment will be operating at the same time in a project area.***

3.4.3-5 ***Utilize construction methods or equipment that will provide the lowest level of noise impact, i.e., use newer equipment that will generate lower noise levels.***

3.4.3-6 ***Establish a program to inform the local community where construction is scheduled, such as keeping people informed of the schedule, duration, and progress of the construction, to minimize the public objections of unavoidable noise. Communities should be notified in advance of the construction and the expected temporary and intermittent noise increases during the construction period.***

3.4.3-7 ***The construction contractor shall establish a noise and vibration complaint program and post a number at the job site where such complaints can be registered. The contractor shall take efforts to control noise (portable sound barriers, short-term relocation, etc.) and document these efforts with the VVWRA. Where vibration damage is documented, VVWRA shall assist home owners or businesses with repair of such damage.***

Traffic and Circulation

3.4.5-1 ***A traffic control plan shall be prepared by VVWRA or the contractor which includes measures to ensure emergency access to all properties that front on the roadways where the sewer pipeline will be installed. This plan shall be reviewed and approved by the City of Victorville.***

Cultural Resources

3.5-1 ***In order to properly identify, evaluate and, if necessary, protect potentially significant subsurface cultural deposits, an archaeological monitoring program shall be implemented during all earth-***

moving operations impacting the top ten feet of sediments except along the paved roadways, where monitoring should commence upon reaching native soils beyond the roadbed fill.

3.5-2 ***In the unlikely event that cultural materials are encountered within sediments that do not require monitoring, all work in that area shall be halted or diverted until a qualified archaeologist can evaluate the nature and significance of the finds.***

5 LIST OF PREPARERS

This Environmental Assessment (EA) was prepared by the Federal Emergency Management Agency (FEMA) in cooperation with the Victor Valley Wastewater Reclamation Authority (VVWRA). The following individuals were involved in the preparation of this EA:

Tom Dodson, Project Manager-Environmental Services, Tom Dodson & Associates. M.A. Geography, University of California, Berkeley; 41 years experience. ***Contribution: Environmental Documentation Project Manager and Special Studies.***

John Gifford, Project Manager-Environmental Services, RBF Consulting. B.S., Law, California State University Northridge; 25 years experience. ***Contribution: Environmental Documentation Project Manager and Special Studies.***

Renee Randolph, Environmental Planner, RBF Consulting. B.A. English, California State University, San Bernardino; 4 years experience. ***Contribution: Environmental Planner.***

Kari Cano, Environmental Planner, RBF Consulting. M.S. Political Science, California State University, Fullerton; 7 years experience. ***Contribution: Environmental Planner.***

G. Morgan Griffin, Deputy Environmental Officer, Federal Emergency Management Agency.

Katerina Hardegen, Environmental Protection Specialist, Federal Emergency Management Agency.

Daniel Langmaid, Environmental Protection Specialist, Federal Emergency Management Agency.

FIGURES

TEXT DESCRIPTION OF GRAPHICS INCLUDED IN THE
"VICTOR VALLEY WASTEWATER RECLAMATION AUTHORITY (VVWRA)
UPPER NARROWS PIPELINES REPLACEMENT PROJECT"

FIGURE 1: PROJECT VICINITY

This figure contains a regional map showing the project area location relative to several of the cities and other governmental jurisdictions (national forests or military bases) in the project region. The nearest cities to the project area are: Victorville, Adelanto, Oro Grande, Apple Valley and Lucerne Valley. Major highways, such as the Interstate 15 Freeway, are also shown.

FIGURE 2: SITE LOCATION

This figure contains the U.S. Geological Survey topographic map of the project area and the specific area in which the pipelines will be replaced is shown. The USGS map is used to display the site area because it is one of the few maps that is properly scaled and allows the specific site mapped location to be identified.

FIGURE 3: UPPER NARROWS INTERCEPTOR

This figure contains a detailed color aerial photo of the existing and damaged Upper Narrows sewer interceptor (pipeline). The portions of the pipeline that will be abandoned are shown in red (a red stripe overlayed on the base aerial photo) and the existing pipeline, where the new pipeline will be connected are shown as a yellow strip on the aerial photo. See Figure 5 for a black and white version of the aerial photo with pipeline alignments shown.

FIGURE 4: AERIAL PHOTO SHOWING THE APPROXIMATE ALIGNMENT OF NEW PIPELINES

This figure contains the same detailed base color aerial photo of the proposed alternative new pipeline alignments shown as overlays on the photo. Alternative 1 is shown in red and essentially follows the existing alignment within the Mojave River channel. The Alternative 2 alignment is shown in orange and includes the segment across the Mojave River channel and then through bedrock and soil outside of the channel alignment. Manhole locations are shown as black dots along the northwest segment of the Alternative 2 alignment. See Figure 5 for a black and white version of the aerial photo with pipeline alignments shown.

FIGURE 5: AERIAL PHOTO OF CONSTRUCTION AREA, PORTALS, AND STAGING AREAS FOR ALTERNATIVE 2

This figure contains the same detailed black and white aerial photo of the Alternative 2 alignment. Specific features related to construction of this pipeline alignment are listed. Individual segments of the new trunk sewer pipeline, called a "reach," are identified. Four reaches are shown on the aerial photo.

FIGURE 6: POTENTIAL FUTURE NOISE CONTOURS CENTRAL CITY PLANNING AREA

Noise levels from aircraft operations at the Southern California Logistics Airport in the City of Victorville are shown on this figure. The noise levels from aircraft operations at the Airport are shown as noise contours, which are lines of equal noise level around the airport. This map of airport noise levels demonstrates that the project area is located outside of any adverse noise levels from airport operations.

FIGURE 3.1.1-1: REGIONAL SEISMIC HAZARDS

This figure contains a map showing regional faults that could cause ground rupture or substantial ground shaking at the project site.

FIGURE 3.1.2-1: MOJAVE WATER AGENCY LOCATION

This figure contains a map of California showing regional topography and the location of the Mojave Water Agency (MWA) boundary, northwest of the City of Los Angeles. The MWA is the regional watermaster and the agency that imports State Project Water into the region, including the project area.

FIGURE 3.1.2-2: BASE MAP OF GROUNDWATER SUBBASINS IN THE MOJAVE RIVER BASIN

This figure contains a map that shows the six Mojave River Subbasins. The project area is located in the Alto Subbasin, between the City of Victorville and the Town of Apple Valley. Repair of the trunk sewer from Apple Valley that crosses the Mojave River at the Mojave River Upper Narrows ensure that adequate wastewater is delivered to the VVWRA main water reclamation plant to meet delivery obligations into the Transition Zone, the Subbasin immediately downstream of the Alto Subbasin.

FIGURE 3.1.2-3: HYDROLOGIC SETTING

This figure contains a map that shows the location of the Mojave River Floodplain Aquifer (the groundwater table immediately beneath the Mojave River that is replenished directly by the flows in the River) and the Mojave River Regional Aquifer, which is replenished by percolation of surface water outside of the Mojave River channel. The damaged trunk sewer is located within the Mojave River Floodplain Aquifer.

FIGURES 3.1.2-4, 3.1.2-5, 3.1.2-6, 3.1.2-7, 3.1.2-8, AND 3.1.2-9 WATER QUALITY FOR TOTAL DISSOLVED SOLIDS, NITRATES, MANGANESE, IRON, FLUORIDE AND ARSENIC, RESPECTIVELY

These figures provide bar graphs that show the range of constituent concentrations for each of the Mojave River Basin Subbasins. The project area is located in the Alto Subbasin and for all of the referenced water quality parameters, the Alto Subbasin meets or exceeds the federal Environmental Protection Agency or State Department of Health Services drinking water quality standards.

This is all of the figures in the main body of the Environmental Assessment.

FIGURE 1
Project Vicinity

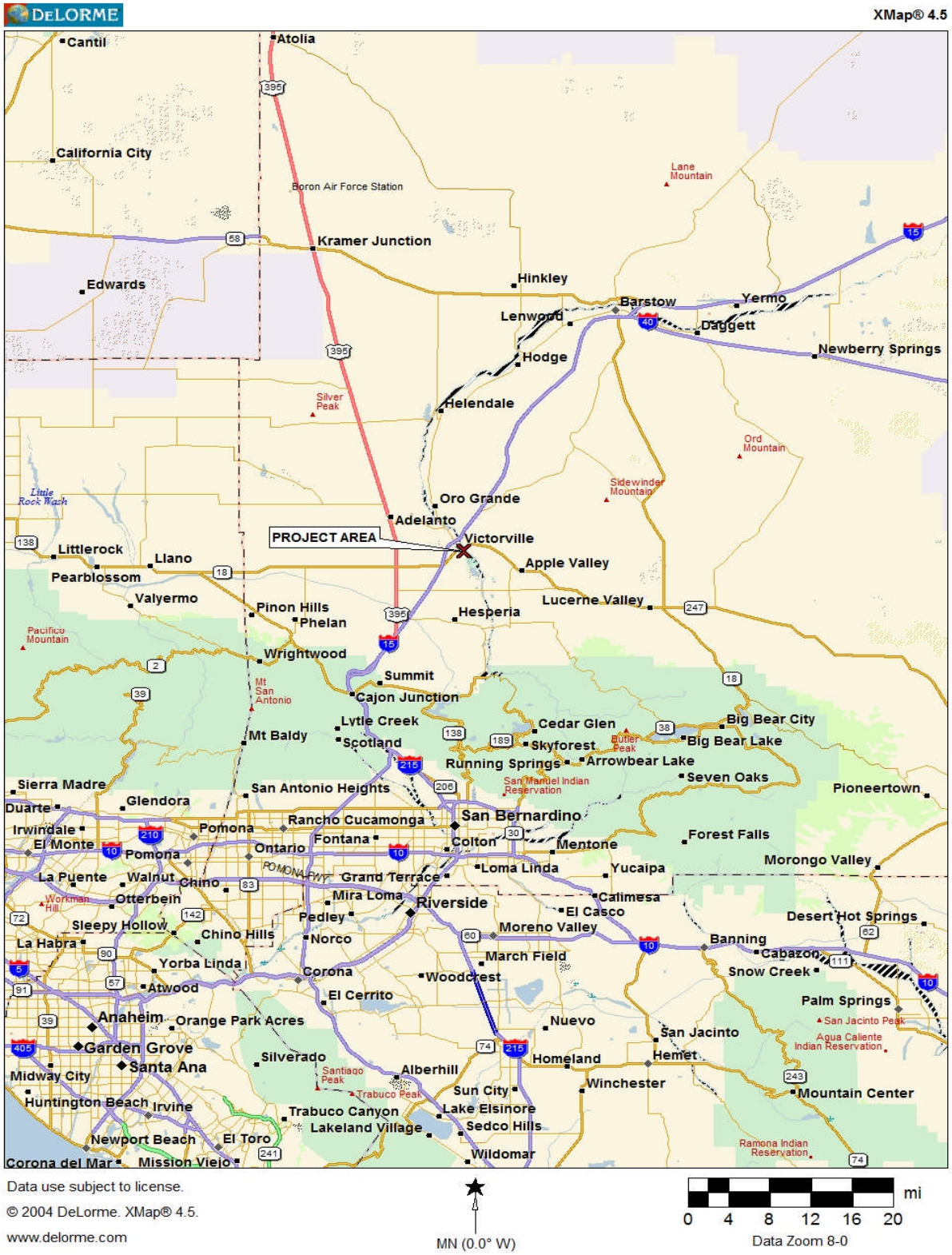

FIGURE 2
Site Location

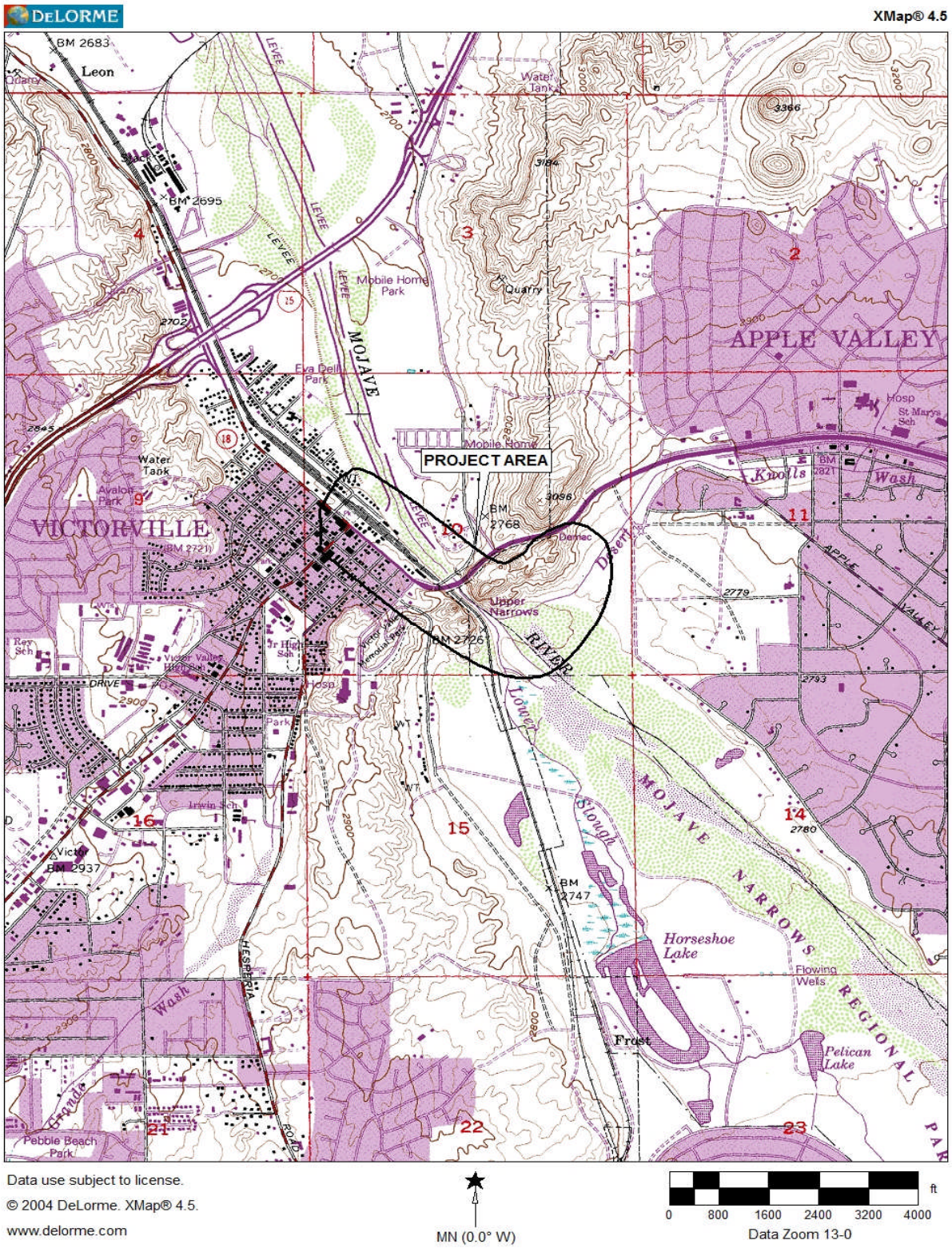

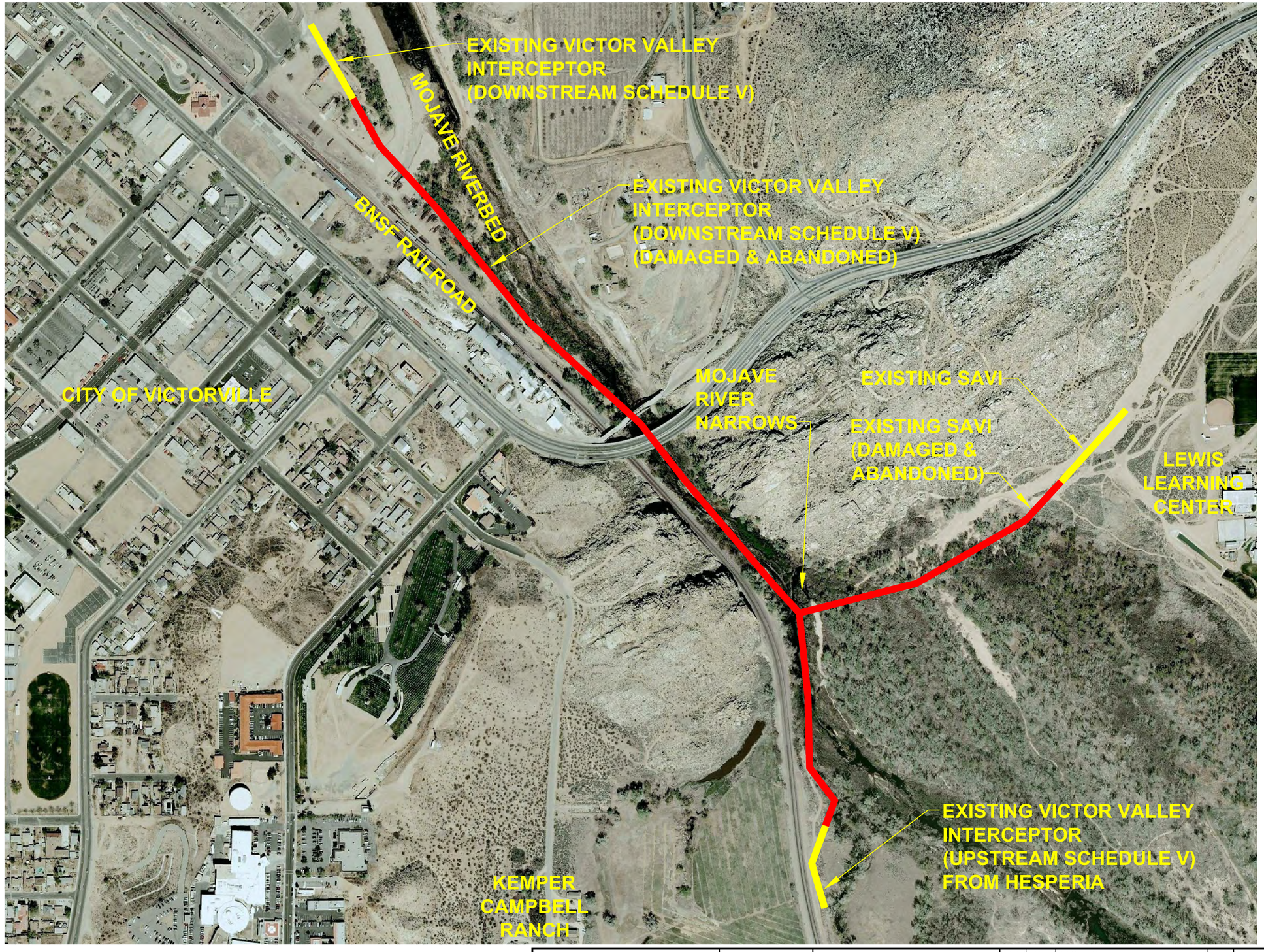

LEGEND:

EXISTING DAMAGED AND ABANDONED INTERCEPTOR

EXISTING INTERCEPTOR

N

1" = 200'

0 200 400

TETRA TECH

www.tetratech.com

17885 VON KARMAN AVENUE, SUITE 500
IRVINE, CA 92614

MARK	DATE	DESCRIPTION	BY

VVWRA

UPPER NARROWS PIPELINE REPLACEMENT

UPPER NARROWS INTERCEPTOR

Project No.:	135-09065-11001
Designed By:	DLW
Drawn By:	WVPJ
Checked By:	RSA

FIGURE 3

Bar Measures 1 inch

11/14/2012 2:32:18 PM - P:\09065\135-09065-11001\CAD\CONCEPTUAL\EHS\03-REV_2012-11-14.DWG - WILKINSON, DREW

Copyright: Tetra Tech

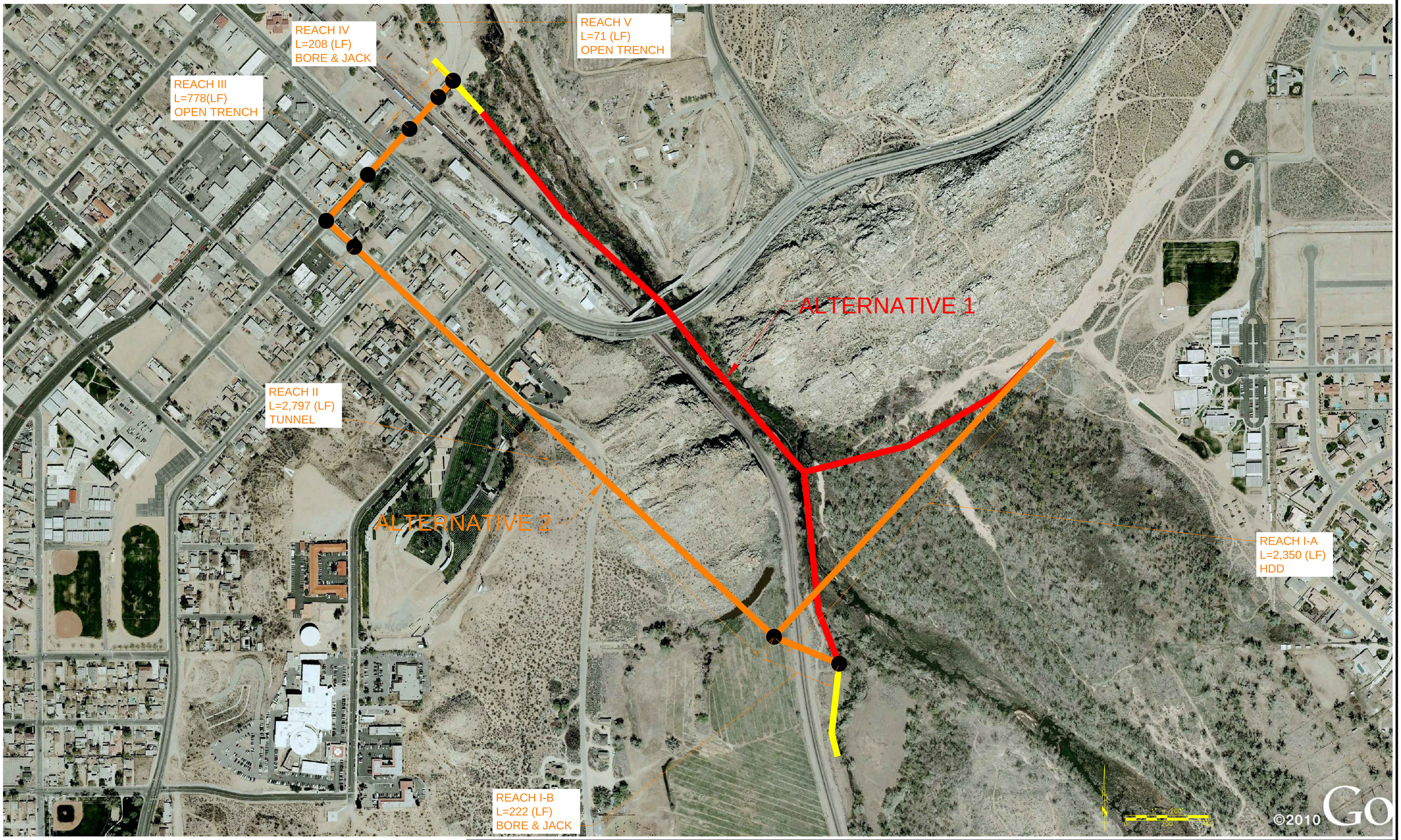

TETRA TECH

www.tetratech.com

MARK	DATE	DESCRIPTION	BY

SCALED AERIAL IMAGE
EXHIBIT ONLY
APPROXIMATE ALIGNMENTS

Project No.:	
Designed By:	DLW
Drawn By:	WVPJ
Checked By:	RSA

FIGURE 4

Bar Measures 1 inch

Copyright: Tetra Tech

6/16/2011 12:05:40 PM - P:\09065\135-09065-11001\CAD\CONCEPTUAL\EHS\03-TDA.DWG - WILKINSON, DREW

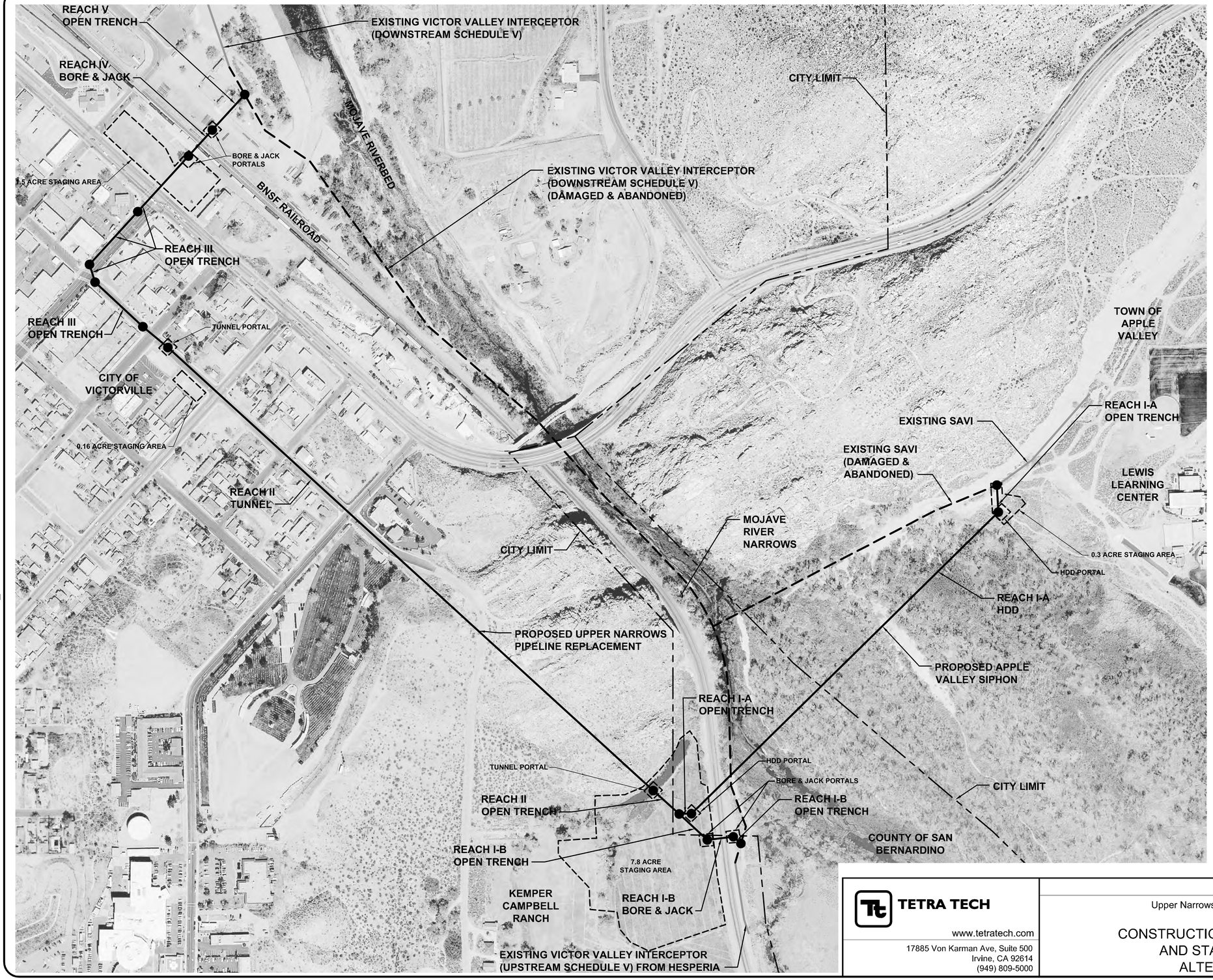

LEGEND

- PROPOSED UPPER NARROWS REPLACEMENT PIPELINE
- EXISTING DAMAGED AND ABANDONED INTERCEPTOR
- EXISTING INTERCEPTOR
- STAGING AREA
- CITY LIMIT

TOTAL STAGING AREA (FOUR (4) AREAS)	9.76 ACRE

N

0 100' 200' 400'
SCALE: 1"=200'

TETRA TECH
www.tetratech.com
17885 Von Karman Ave, Suite 500
Irvine, CA 92614
(949) 809-5000

VVWRA

Upper Narrows Pipeline Replacement

CONSTRUCTION AREA, PORTALS, AND STAGING AREAS
ALTERNATIVE 2

Project No.: 135-09605-11001
Date: June 15, 2011
Designed By: DLW

FIGURE 5

Bar Measures 1 inch

Copyright: Tetra Tech

11/14/2012 2:34:45 PM - P:\09065\135-09065-11001\CAD\CONCEPTUAL\EHSI02-REV_2012-11-14.DWG - WILKINSON, DREW

FIGURE 6
Potential Future Noise Contours Central City Planning Area

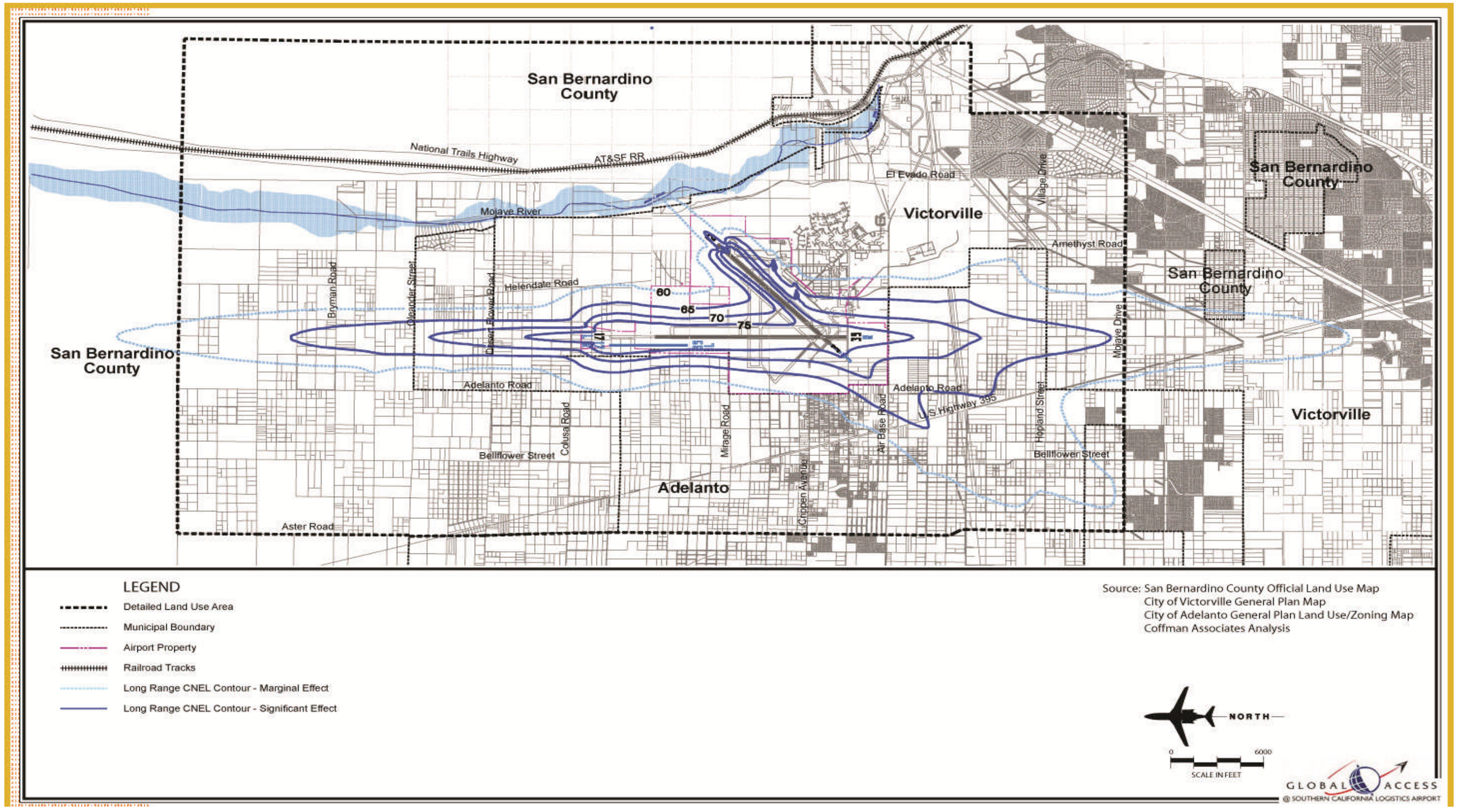

Source: Extracted from City of Victorville General Plan

FIGURE 3.1-1-1
Regional Seismic Hazards

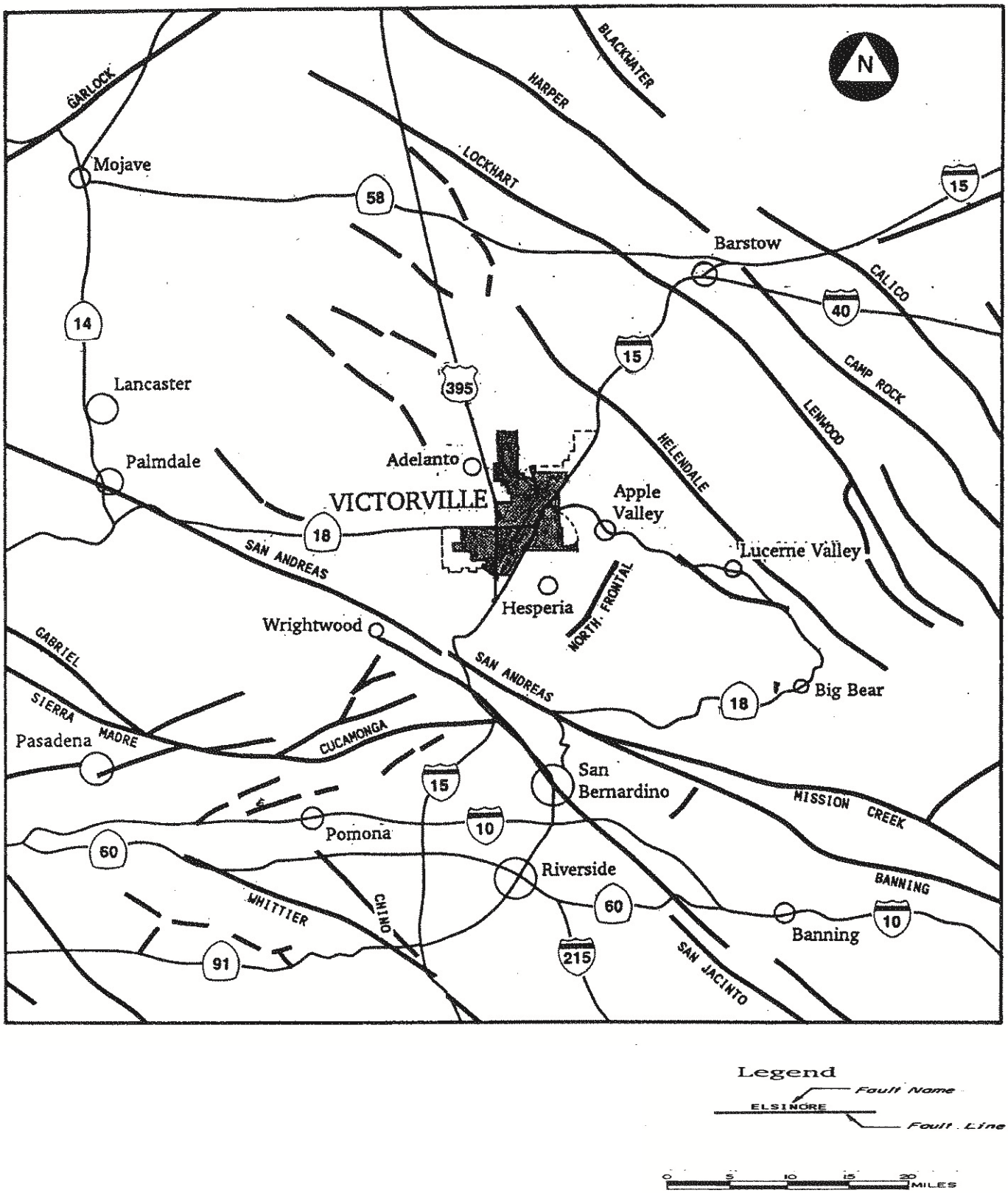

Source: Victorville General Plan (revised 9-12-01)

FIGURE 3.1.2-1
MWA Location

Source: Mojave Water Agency 2004 Regional Water Management Plan

FIGURE 3.1.2-2
Base Map

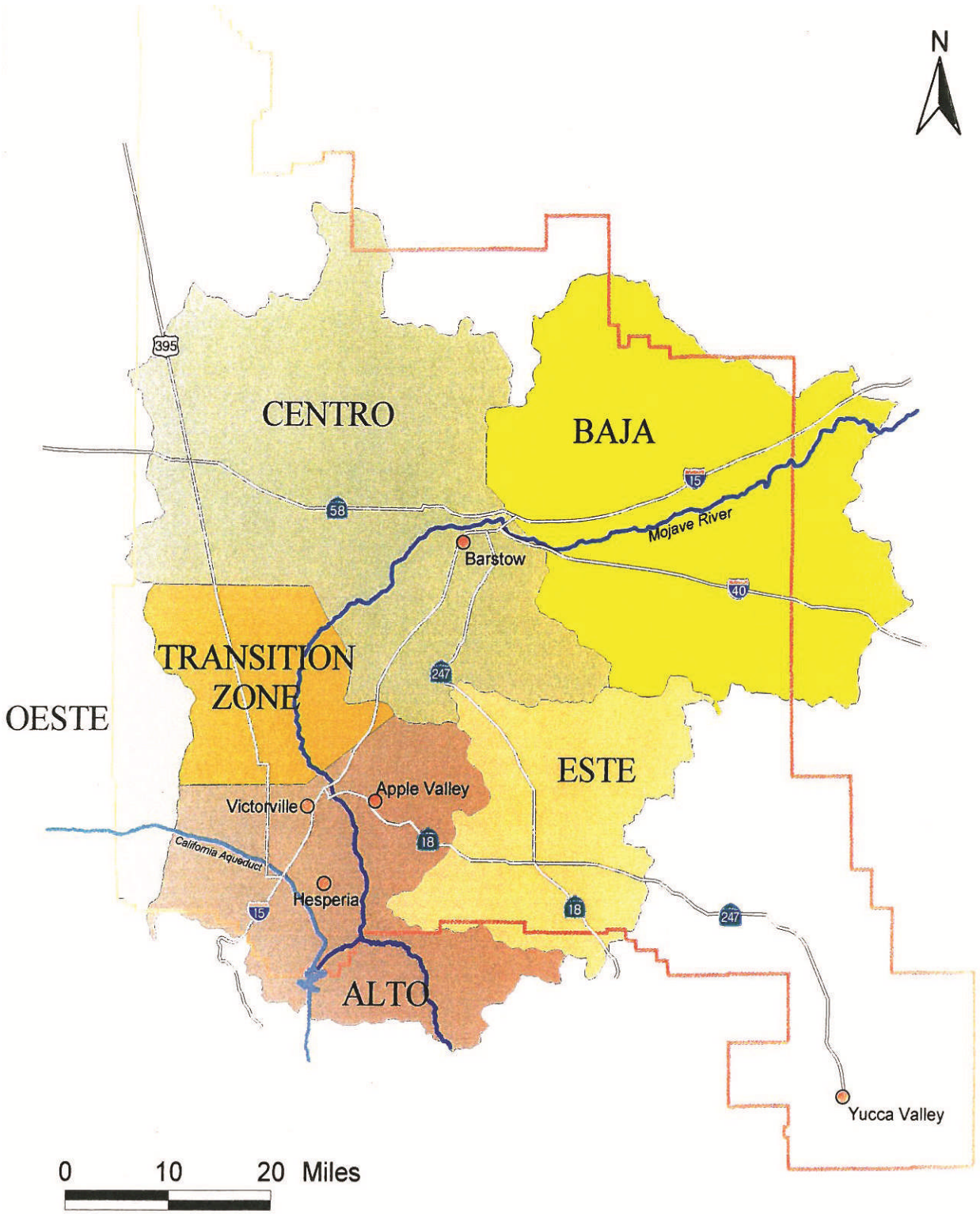

Source: Mojave Water Agency 2004 Regional Water Management Plan

FIGURE 3.1.2-3
Hydrologic Setting

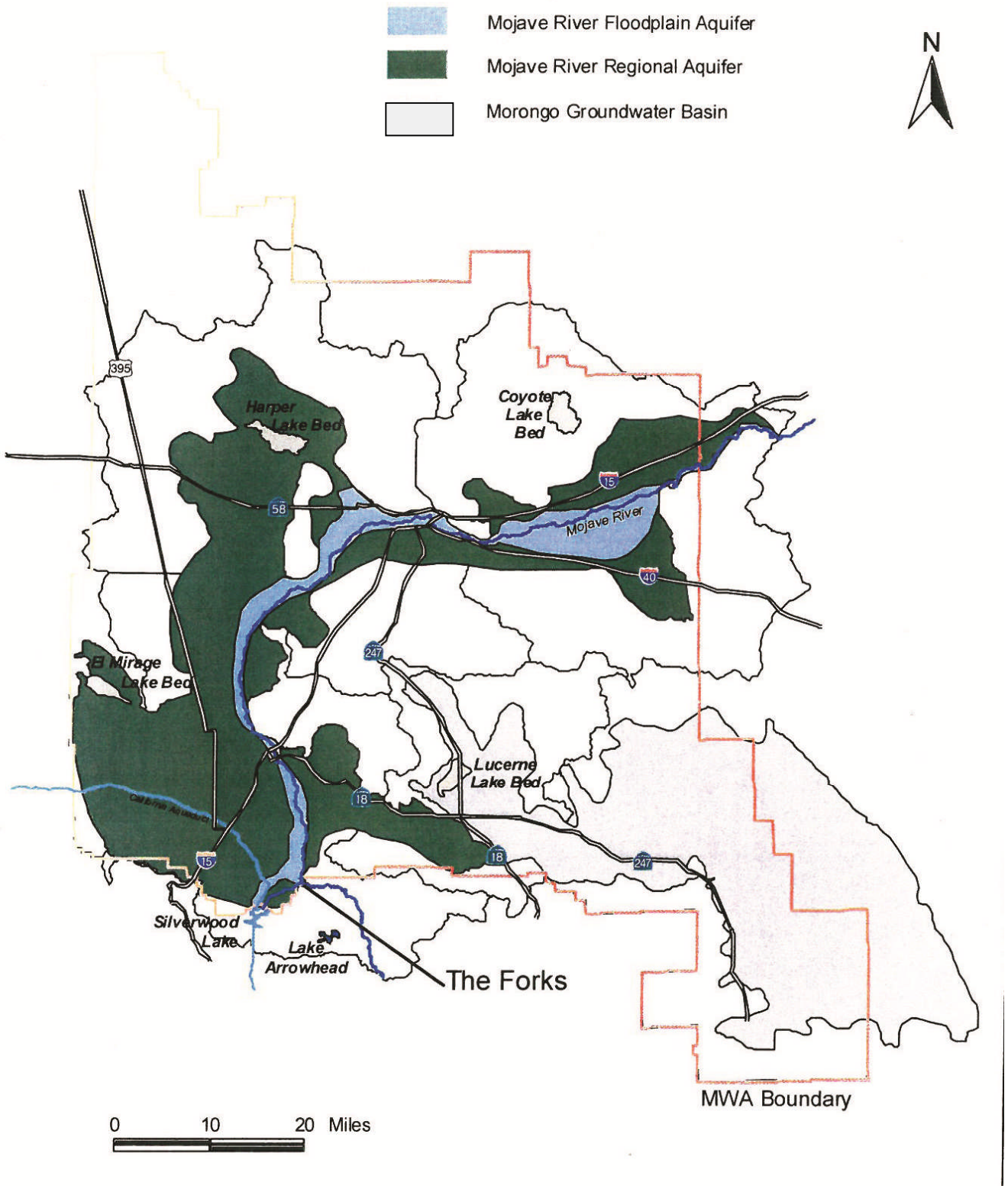

Source: Mojave Water Agency 2004 Regional Water Management Plan

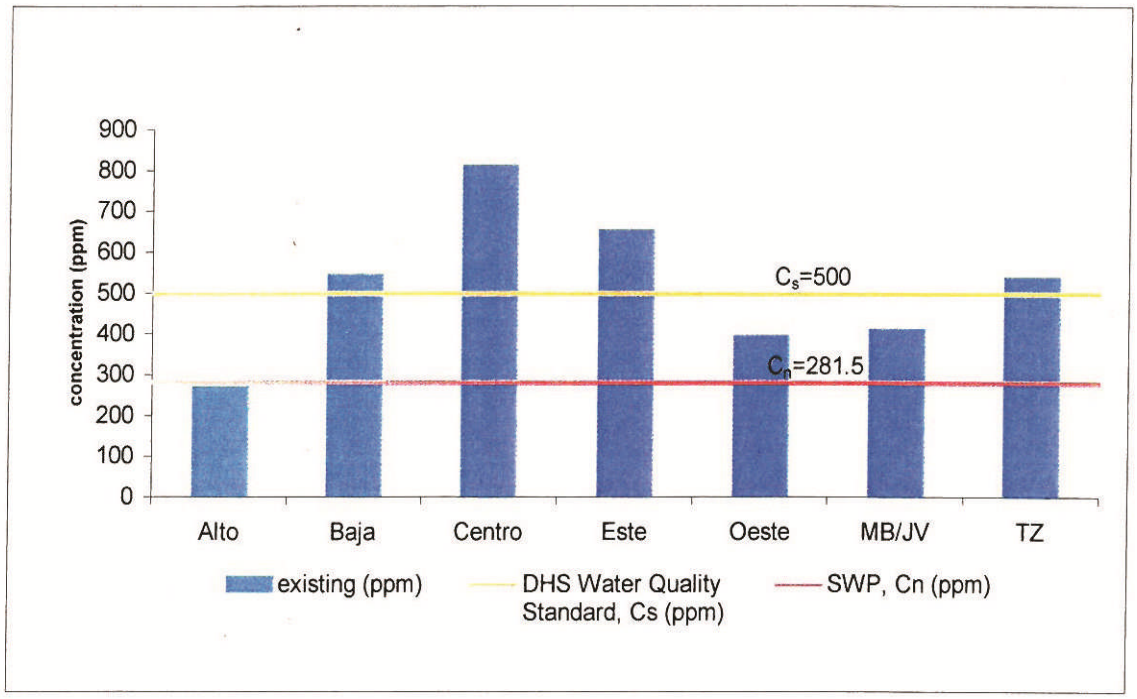

Figure 3.1.2-4: Total Dissolved Solids

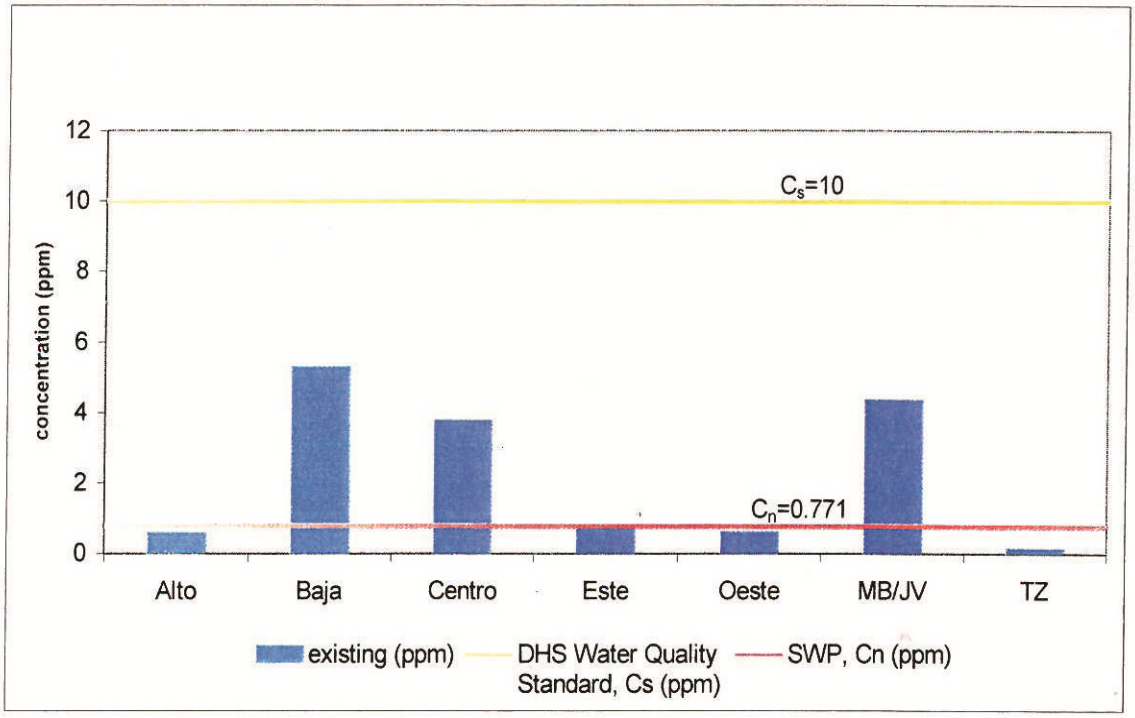

Figure 3.1.2-5: Nitrates

Source: Mojave Water Agency 2004 Regional Water Management Plan

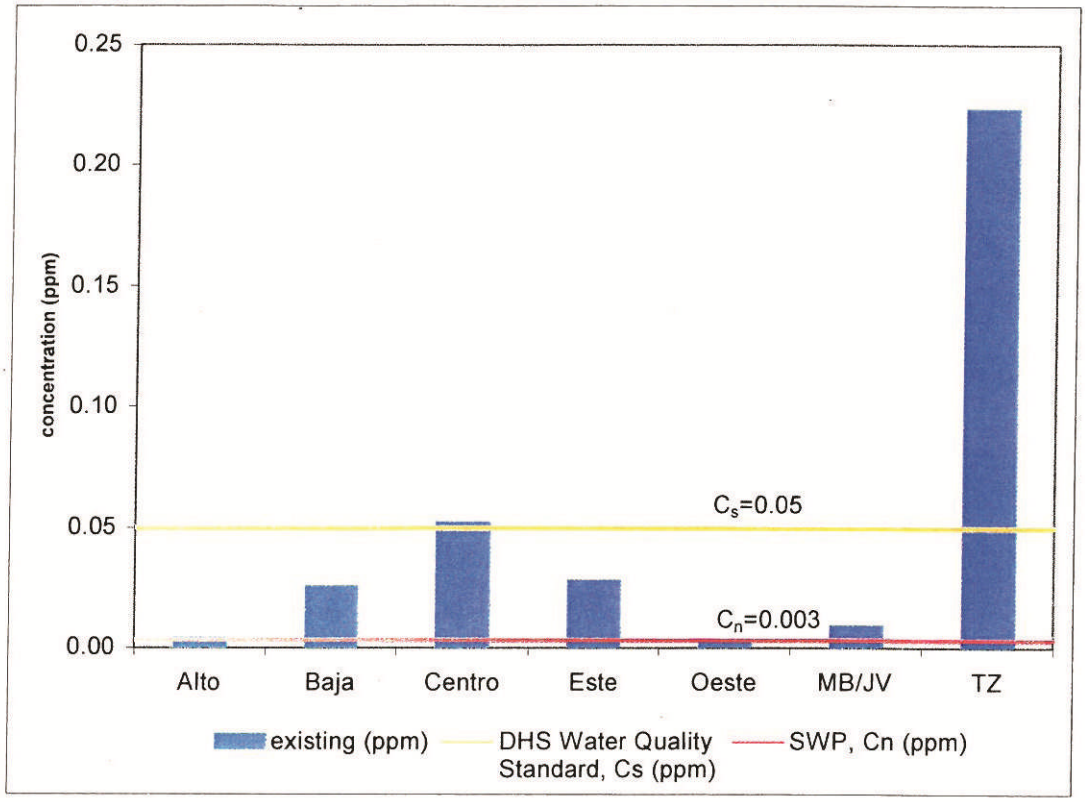

Figure 3.1.2-6: Manganese

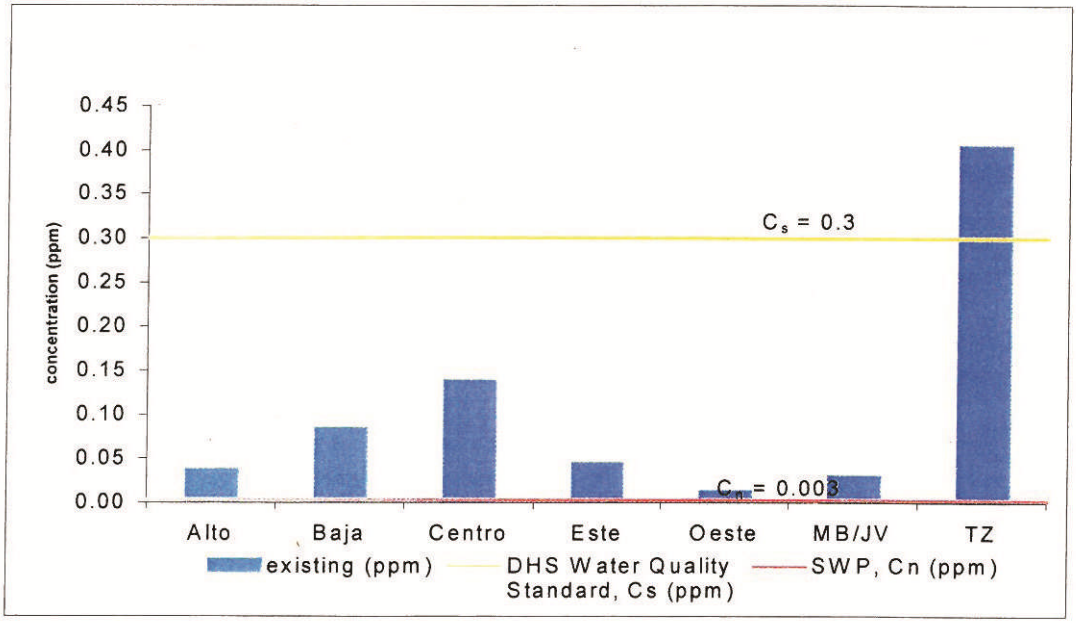

Figure 3.1.2-7: Iron

Source: Mojave Water Agency 2004 Regional Water Management Plan

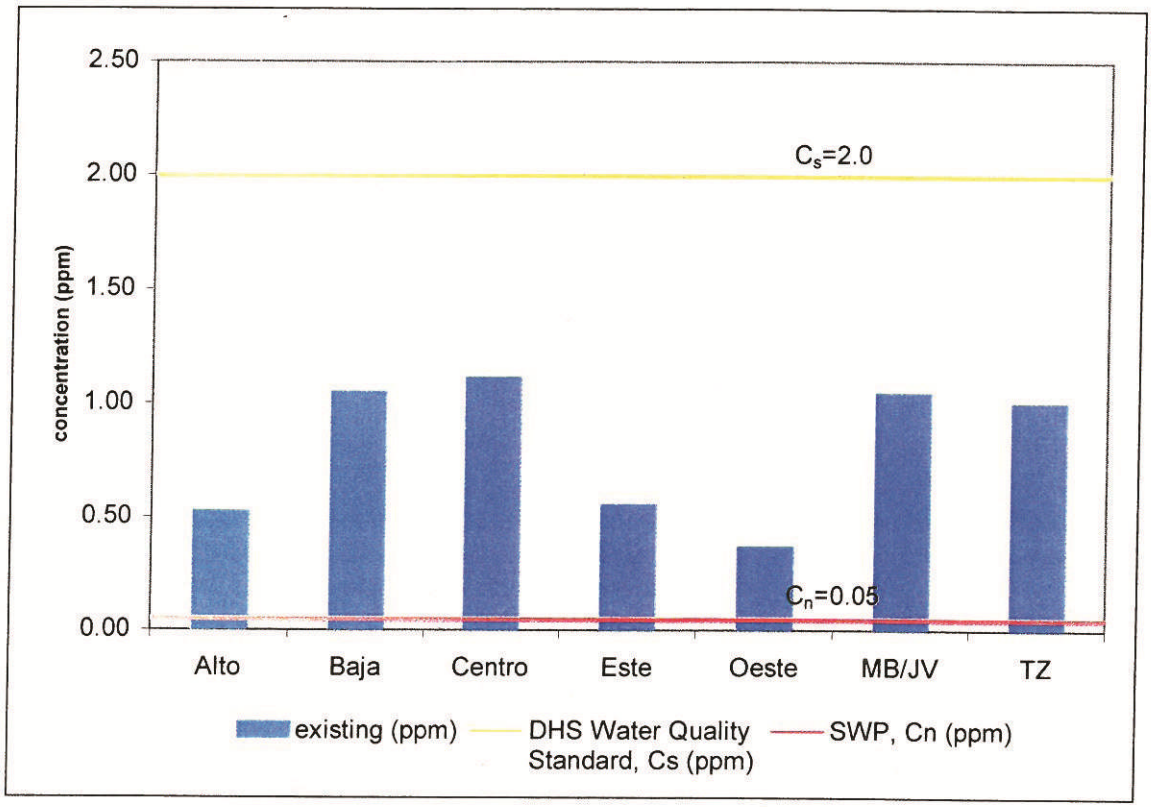

Figure 3.1.2-8: Fluoride

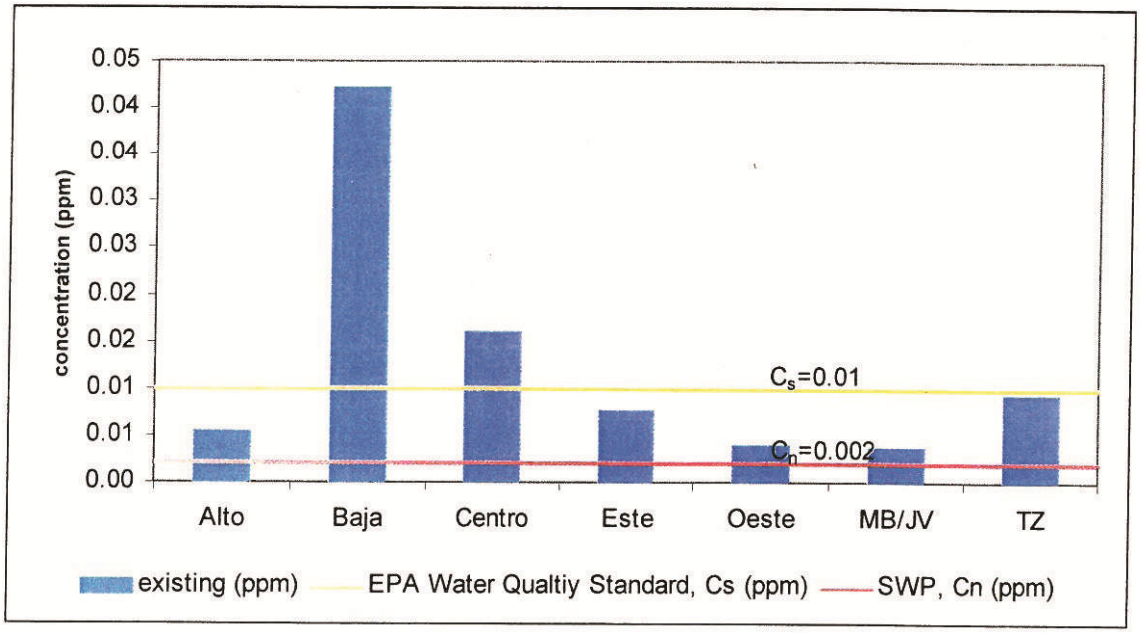

Figure 3.1.2-9: Arsenic

Source: Mojave Water Agency 2004 Regional Water Management Plan

APPENDIX 1

VICTOR VALLEY WASTEWATER RECLAMATION AUTHORITY
UPPER NARROWS PIPELINE REPLACEMENT

17885 VON KARMAN AVENUE, SUITE 500
IRVINE, CA 92614
TEL: (949) 809-5000 FAX: (949) 809-5010
www.tetratech.com

TETRA TECH

NOT FOR CONSTRUCTION

PROJECT LOCATION:
TOWN OF APPLE VALLEY AND
CITY OF VICTORVILLE, CALIFORNIA

CLIENT INFORMATION:
VICTOR VALLEY WASTEWATER
RECLAMATION AUTHORITY (VVWRA)
15776 MAIN STREET, SUITE 3
HESPERIA, CA 92345
(760) 948-9849

Tt PROJECT No.:
135-09065-11001

CLIENT PROJECT No.:

PROJECT DESCRIPTION / NOTES:

ISSUED:

UPDATED FOR CONSTRUCTION - FEBRUARY 2012
95% SUBMITTAL - NOVEMBER 2011
35% SUBMITTAL - AUGUST 2011

VICINITY MAP:

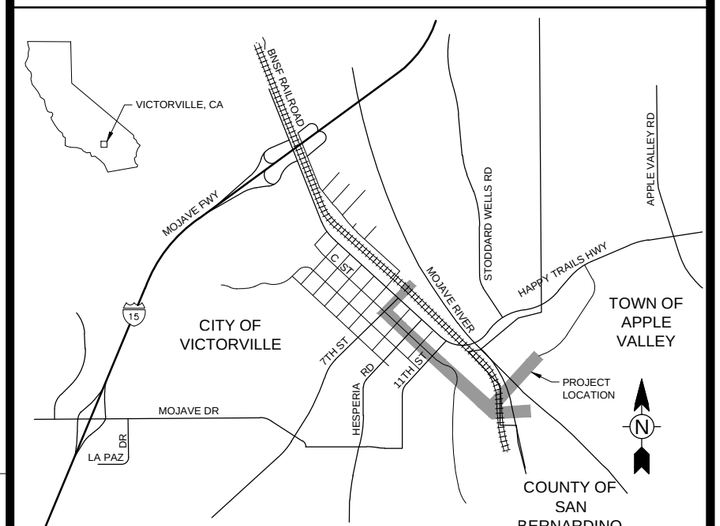

REGISTERED PROFESSIONAL ENGINEER
JOHNNE BEARD
No. C50129
Exp. 06-30-13
CIVIL
STATE OF CALIFORNIA
02/24/12

CALTRANS PERMIT NO. 08-12-N-UT-0064

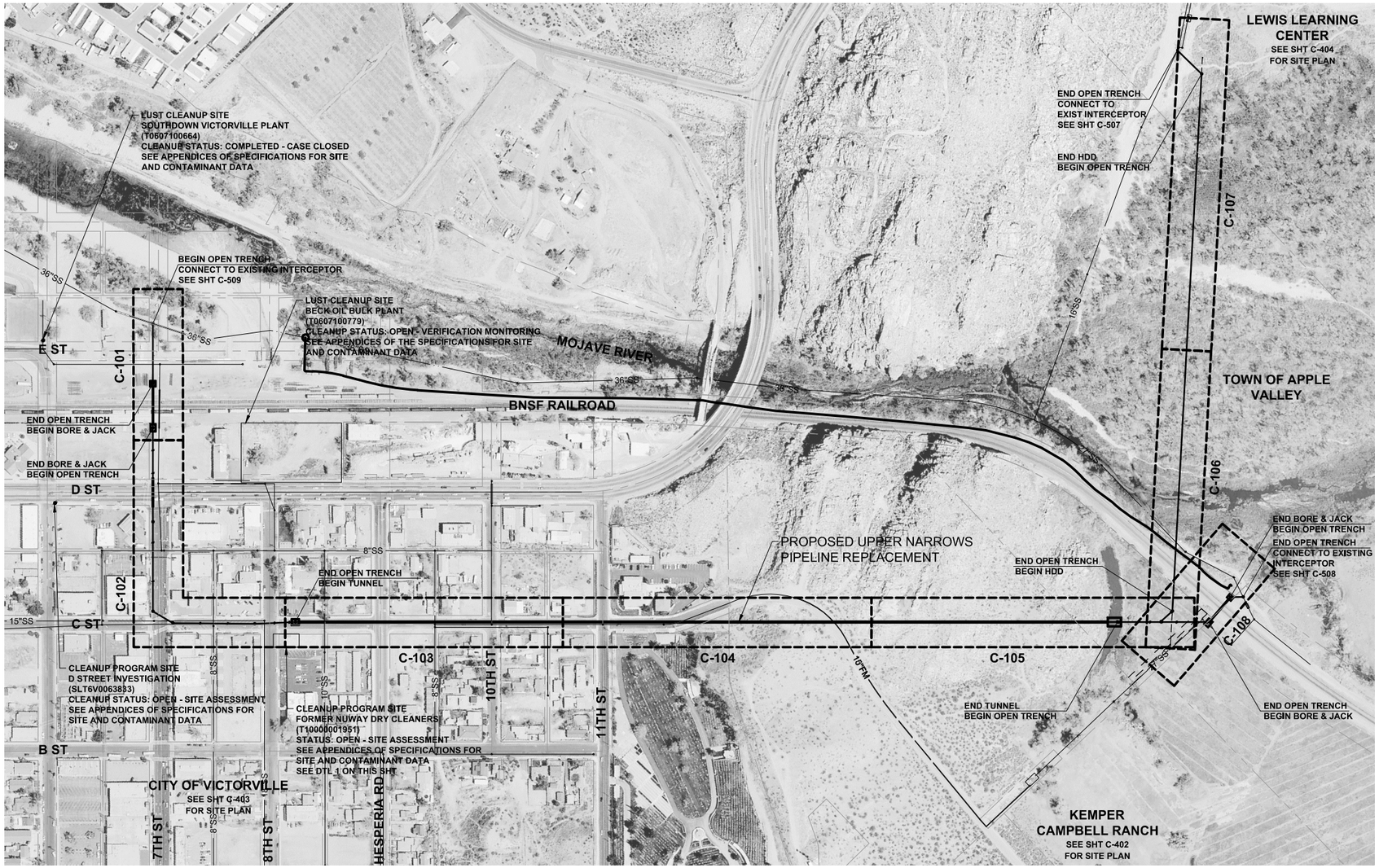

KEY MAP

SCALE: 1"=200"

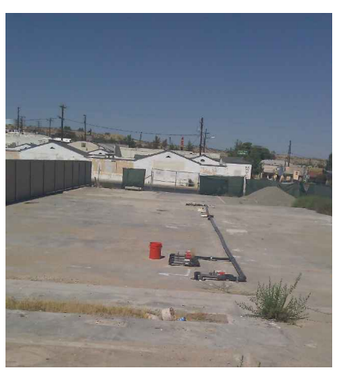

1 FORMER NUWAY DRY CLEANERS CLEANUP SITE

SCALE: NTS

SHEET INDEX

SHT #	SHEET TITLE
	COVER SHEET
G-001	SHEET INDEX & KEY MAP
G-002	UTILITY AND AGENCY INDEX, GENERAL NOTES & STANDARD SYMBOLS
G-003	REACHES
V-101	HORIZONTAL CONTROL
C-101	PLAN AND PROFILE STA 100+00.00 TO STA 104+00.00
C-102	PLAN AND PROFILE STA 104+00.00 TO STA 113+75.00
C-103	PLAN AND PROFILE STA 113+75.00 TO STA 123+00.00
C-104	PLAN AND PROFILE STA 123+00.00 TO STA 133+00.00
C-105	PLAN AND PROFILE STA 133+00.00 TO STA 142+06.82
C-106	PLAN AND PROFILE STA 200+00.00 TO STA 209+00.00
C-107	PLAN AND PROFILE STA 209+00.00 TO STA 217+97.04
C-108	PLAN AND PROFILE STA 300+00.00 TO STA 303+05.88
C-109	GRADING PLAN
C-301	CIVIL SECTIONS
C-401	DEMOLITION AND CONNECTION PLAN
C-402	KEMPER CAMPBELL RANCH STAGING AND ACCESS
C-403	C STREET AND 7TH STREET STAGIN AND ACCESS
C-404	LEWIS LEARNING CENTER STAGING AND ACCESS
C-501	CIVIL DETAILS 1
C-502	CIVIL DETAILS 2
C-503	CIVIL DETAILS 3
C-504	CIVIL DETAILS 4
C-506	(NOT USED)
C-507	CONNECTION DETAILS STA 219+06.56 MH AV-3A
C-508	CONNECTION DETAILS STA 303+05.88 MH VV-5-9
C-509	CONNECTION DETAILS STA 100+00.00 MH VV-4-25A
C-510	MANHOLE BASE DETAILS
C-511	SIPHON MANHOLE BASE DETAILS
CT-001	TRAFFIC CONTROL TITLE SHEET
CT-101	TRAFFIC CONTROL PLAN STAGE 1A
CT-102	TRAFFIC CONTROL PLAN STAGE 1B
CT-103	TRAFFIC CONTROL PLAN STAGE 1B
CT-104	TRAFFIC CONTROL PLAN STAGE 1C
CT-105	TRAFFIC CONTROL PLAN STAGE 2
CT-106	TRAFFIC CONTROL PLAN STAGE 3A
CT-107	TRAFFIC CONTROL PLAN STAGE 3B
CT-108	TRAFFIC CONTROL PLAN STAGE 3C
CT-109	TRAFFIC CONTROL PLAN STAGES 4, 5, AND 6
CT-110	TRAFFIC CONTROL DETOUR STAGE 1 DETOUR PLAN
CT-111	TRAFFIC CONTROL DETOUR STAGE 4 DETOUR PLAN
CT-112	TRAFFIC CONTROL DETOUR STAGE 5 DETOUR PLAN
CT-113	TRAFFIC CONTROL DETOUR STAGE 6 DETOUR PLAN
S-001	GENERAL STRUCTURAL NOTES
S-501	TYPICAL STRUCTURAL DETAILS
S-502	MANHOLE DETAIL PLAN AND SECTION

N

0 100' 200' 400'

SCALE: 1"=200'

NOT FOR CONSTRUCTION

TETRA TECH
www.tetratech.com
17885 Von Karman Avenue, Suite 500
Irvine, CA 92614-6213
Tel: (949) 809-5000 Fax: (949) 809-5010

VICTOR VALLEY WASTEWATER RECLAMATION AUTHORITY

MARK	DATE	DESCRIPTION	BY

VVWRA

UPPER NARROWS PIPELINE REPLACEMENT

SHEET INDEX & KEY MAP

Project No.:	135-09065-11001
Designed By:	DLW
Drawn By:	WVPJ
Checked By:	LEB

G-001

Copyright: Tetra Tech

Bar Measures 1 inch

10/30/2012 1:20:10 PM - P:\09065\135-09065-11001\CAD\SHEETFILES\G-001-SHEETINDEX,LOCATIONMAP.DWG - JOHNSON, WILLIE

OWNER INFORMATION

VVWRA 15776 MAIN ST, SUITE 3 HESPERIA, CA 92345	LOGAN OLDS (760) 948-9849

UTILITY AND AGENCY INDEX

APPLE VALLEY RANCHOS WATER 21760 OTTAWA ROAD APPLE VALLEY, CA 92308-6599	JERRY BENDER (760) 247-6484
AT&T TRANSMISSION 22311 BROOKHURST ST, SUITE 203 HUNTINGTON BEACH, CA 92646	WALTER WERSTIUK (714) 963-7964
BNSF 31441 SANTA MARGARITA PKWY RANCHO SANTA MARGARITA, CA 92688	BRETT PAULSON (949) 421-8998
CALTRANS	XXXX XXXX
CHARTER COMMUNICATIONS 12490 BUSINESS CENTER DRIVE, SUITE #1 VICTORVILLE, CA 92395	NEAL NEIMAN (760) 843-3062
CITY OF VICTORVILLE 14343 CIVIC DR VICTORVILLE, CA 92392	SEAN McGLADE (760) 955-5157
COUNTY OF SAN BERNARDINO FLOOD CONTROL 825 E. THIRD ST SAN BERNARDINO, CA 92415	(909) 387-8104
KEMPER CAMBELL RANCH VICTORVILLE, CA 92395	LEE GRAHAM (760) 245-7695 (760) 686-4715 (CELL)
LEWIS LEARNING CENTER 17500 MANA ROAD APPLE VALLEY, CA 92307	RICK PERCEY (760) 403-5342
SOUTHERN CALIFORNIA EDISON 1851 W VALENCIA DRIVE FULLERTON, CA 92833	DAVID HENSLEY (714) 870-3149
SW GAS PO BOX 1498 VICTORVILLE, CA 92392-1498	KURT EDWARDS (760) 951-4166
TOWN OF APPLE VALLEY 14955 DALE EVANS PARKWAY APPLE VALLEY, CA 92307	DENNIS CRON (760) 240-7000 x7610
VERIZON 16071 MOJAVE DRIVE, BLDG A VICTORVILLE, CA 92395	MICHAEL MARQUARDT (760) 245-0665

BASIS OF BEARINGS

THE BEARINGS SHOWN HEREON ARE BASED ON THE BEARING BETWEEN SAN BERNARDINO COUNTY GPS CONTROL NETWORK POINTS #21304 AND #21351 BEING N00°32'34"W AS DETERMINED LOCALLY.

COORDINATE DATUM

COORDINATES SHOWN ARE BASED ON THE CALIFORNIA STATE PLANE COORDINATES, NAD83, ZONE V, 1992,88 EPOCH.

BENCH MARK

V-226
ELEV. 2773.26 NGVD29 PER THE CITY OF VICTORVILLE BENCHMARK NETWORK
LOCATION: TOP OF SOUTHWEST ANCHOR BOLT OF TRAFFIC LIGHT AT NORTHEAST CORNER AIR BASE RD AND EL EVADO RD.

ASCE STANDARD GUIDELINE FOR THE COLLECTION AND DEPICTION OF EXISTING SUBSURFACE UTILITY DATA

NOTE: THESE UTILITY QUALITY LEVELS ARE SHOWN AT ALL UTILITY CROSSINGS IN THE PROFILE DESIGN.

(A) UTILITY QUALITY LEVEL A: PRECISE HORIZONTAL AND VERTICAL LOCATION OF UTILITIES OBTAINED BY THE ACTUAL EXPOSURE (OR VERIFICATION OF PREVIOUSLY EXPOSED AND SURVEYED UTILITIES) AND SUBSEQUENT MEASUREMENT OF SUBSURFACE UTILITIES, USUALLY AT A SPECIFIC POINT. MINIMALLY INTRUSIVE EXCAVATION EQUIPMENT IS TYPICALLY USED TO MINIMIZE THE POTENTIAL FOR UTILITY DAMAGE. A PRECISE HORIZONTAL AND VERTICAL LOCATION, AS WELL AS OTHER UTILITY ATTRIBUTES, IS SHOWN ON PLAN DOCUMENTS. ACCURACY IS TYPICALLY SET TO 15-MM VERTICAL AND TO APPLICABLE HORIZONTAL SURVEY AND MAPPING ACCURACY AS DEFINED OR EXPECTED BY THE PROJECT OWNER.

(B) UTILITY QUALITY LEVEL B: INFORMATION OBTAINED THROUGH THE APPLICATION OF APPROPRIATE SURFACE GEO-PHYSICAL METHODS TO DETERMINE THE EXISTENCE AND APPROXIMATE HORIZONTAL POSITION OF SUBSURFACE UTILITIES. QUALITY LEVEL B DATA SHOULD BE REPRODUCIBLE BY SURFACE GEOPHYSICS AT ANY POINT OF THEIR DEPICTION. THIS INFORMATION IS SURVEYED TO APPLICABLE TOLERANCES DEFINED BY THE PROJECT AND REDUCED ONTO PLAN DOCUMENTS.

(C) UTILITY QUALITY LEVEL C: INFORMATION OBTAINED BY SURVEYING AND PLOTTING VISIBLE ABOVE-GROUND UTILITY FEATURES AND BY USING PROFESSIONAL JUDGMENT IN CORRELATING THIS INFORMATION TO QUALITY LEVEL D INFORMATION.

(D) UTILITY QUALITY LEVEL D: INFORMATION DERIVED FROM EXISTING RECORDS OR ORAL RECOLLECTIONS.

GENERAL NOTES

1. ALL WORK AND MATERIALS SHALL CONFORM TO THE PROJECT SPECIFICATIONS AND PLANS, JURISDICTIONAL AGENCY STANDARD PLANS AND STANDARD SPECIFICATIONS FOR PUBLIC WORKS CONSTRUCTION.
2. A PRECONSTRUCTION CONFERENCE OF REPRESENTATIVES FROM AFFECTED AGENCIES AND THE CONTRACTOR SHALL BE HELD PRIOR TO START OF WORK.
3. A VVWRA REPRESENTATIVE SHALL BE NOTIFIED AT LEAST TEN (10) WORKING DAYS PRIOR TO BEGINNING CONSTRUCTION.
4. THE CONTRACTOR SHALL KEEP A SIGNED SET OF APPROVED PLANS AND SPECIFICATIONS AND A COPY OF ALL CONSTRUCTION PERMITS ON THE JOB SITE AT ALL TIMES DURING WORKING OPERATIONS.
5. ALL WORK PERFORMED SHALL BE IN ACCORDANCE WITH THE PERMIT AND LICENSE REQUIREMENTS OF THE AGENCY HAVING JURISDICTION AND THE CONTRACT DOCUMENTS.
6. THE CONTRACTOR SHALL CALL UNDERGROUND SERVICE ALERT (811) TWO TO FOURTEEN DAYS PRIOR TO ANY EXCAVATION.
7. THESE DOCUMENTS HAVE BEEN PREPARED FOR A SPECIFIC PROJECT AND SHALL NEITHER BE ALTERED NOR REUSED FOR ANY OTHER PURPOSE. ALSO, THESE DOCUMENTS DO NOT REPRESENT AS-BUILT CONDITIONS. IF THESE DOCUMENTS ARE ALTERED INTENTIONALLY OR UNINTENTIONALLY, OR REUSED WITHOUT DESIGN ENGINEER'S WRITTEN APPROVAL, IT WILL BE AT THE SOLE RISK AND RESPONSIBILITY OF THE USER. THE ACT OF ALTERING OR REUSING IS CONSTRUED AS INDEMNIFYING AND HOLDING THE DESIGN ENGINEERING FIRM AND ITS EMPLOYEES HARMLESS FROM ALL CLAIMS, DAMAGES, AND EXPENSES, INCLUDING ATTORNEY FEES, ARISING OUT OF SUCH ACT.
8. THE EXISTING UNDERGROUND UTILITIES ARE SHOWN PER AVAILABLE RECORDS.
9. ALL CONCRETE SIDEWALKS OR CURBS TO BE REMOVED AND REPLACED SHALL BE SAWCUT TO THE NEAREST TRANSVERSE SCORE MARK OR ADJUSTABLE CONTROL JOINT OR WEAKENED PLANE JOINT AND REPLACED IN CONFORMANCE WITH THE JURISDICTIONAL AGENCY REQUIREMENTS. ALL CONCRETE SURFACES SHALL CONFORM IN GRADE, COLOR AND FINISH TO ALL ADJOINING CURB, GUTTER AND WALKS.
10. THE CONTRACTOR SHALL CHECK THE FLOW LINE ELEVATION OF EXISTING SEWER AGAINST CONTROL PROVIDED PRIOR TO CONSTRUCTION. IF THE EXISTING FLOW LINE VARIES FROM THE ELEVATION SHOWN IN THESE PLANS, THE CONTRACTOR SHALL NOTIFY THE ENGINEER.
11. PRIOR TO FINAL ACCEPTANCE, THE CONTRACTOR SHALL PROVIDE A CCTV VIDEO ON CD OF ALL SEWER MAINS WHICH INCLUDES A LOG OF ALL CONNECTIONS AND MANHOLES. A VVWRA REPRESENTATIVE MUST BE PRESENT DURING THE CCTV WORK. CONTACT VVWRA 48 HOURS PRIOR TO TELEVISING THE SEWER. THE CONTRACTOR SHALL REPLACE ANY SEGMENT OF PIPE THAT IS DEEMED TO BE DEFECTIVE OR DOES NOT MEET THE REQUIREMENTS OF THE CONTRACT AS DETERMINED BY THE ENGINEER. ALL COSTS INCURRED BY REMOVAL AND REPLACEMENT OF DEFECTIVE PIPE SHALL BE THE RESPONSIBILITY OF THE CONTRACTOR.
12. SEWER MAINS SHALL BE THE TYPE OF PIPE SHOWN ON THE PLANS AND SPECIFICATIONS.
13. ALL LENGTHS SHOWN IN PROFILE ARE HORIZONTAL LENGTHS BETWEEN THE ID OF THE MANHOLES WHEREAS ALL LENGTHS SHOWN IN THE PLAN VIEW ARE HORIZONTAL LENGTHS TO THE CENTER OF THE MANHOLE (UNLESS OTHERWISE NOTED).
14. EXISTING OR FINISHED GRADE SHOWN ON PROFILE IS OVER CENTERLINE OF PIPE.
15. THE PLANS DO NOT REFLECT THE TRAFFIC SIGNAL CONDUITS AND LOOPS. THE CONTRACTOR SHALL FIELD VERIFY THE LOCATION OF ALL TRAFFIC SIGNAL LOOPS AND PROTECT IN PLACE OR IF DAMAGED REPAIR TO THE SATISFACTION OF THE JURISDICTIONAL AGENCY.
16. EXISTING SEWAGE FLOWS SHALL NOT BE INTERRUPTED. ALL SEWAGE FLOWS SHALL BE CONVEYED IN CLOSED CONDUITS AND DISPOSED OF IN A SANITARY SEWER SYSTEM, INCLUDING PUMPING IF REQUIRED. SEWAGE FLOWS SHALL NOT BE PERMITTED TO FLOW INTO TRENCHES OR BE COVERED BY BACKFILL.
17. EXISTING SEWER PIPES AND MANHOLES TO BE ABANDONED SHALL BE ABANDONED IN ACCORDANCE WITH THE SPECIFICATIONS.
18. UTILITIES WERE POTHOLED DURING THE DESIGN PHASE. THE CONTRACTOR IS RESPONSIBLE TO POTHOLE ALL OTHER UTILITIES AS SHOWN ON PLANS PRIOR TO CONSTRUCTING THE NEW SEWER IN THE VICINITY OF THE UTILITY. ANY FOUND CONFLICTS SHALL BE IMMEDIATELY BROUGHT TO THE ATTENTION OF THE ENGINEER.
19. FOR ALL WATER CROSSINGS, AN INDIVIDUAL STANDARD LENGTH SEWER PIPE JOINT SHALL BE CENTERED AT THE CROSSING TO MAXIMIZE THE SEWER JOINT DISTANCE FROM THE WATER/SEWER LINE CROSSING.
20. CONTRACTOR SHALL DEMONSTRATE EXTREME CAUTION WHEN TRENCHING IN CLOSE PROXIMITY OF OTHER UTILITIES. ANY SIGN OF DEGRADATION OF THE TRENCH WALL INTEGRITY WILL NOT BE TOLERATED AND WILL FORCE THE STOPPAGE OF WORK UNTIL THE TRENCH INTEGRITY IS ADEQUATELY RESTORED.
21. SURPLUS AND MATERIAL REMOVED WHICH IS NOT SUITABLE FOR USE IN THIS PROJECT SHALL BECOME THE PROPERTY OF THE CONTRACTOR AND SHALL BE DISPOSED OF AWAY FROM THE JOB SITE IN A MANNER AND AT A LOCATION ACCEPTABLE TO ALL CONTROLLING AGENCIES.
22. CONTRACTOR SHALL INFORM VVWRA OF CONSTRUCTION ACTIVITIES IMPACTING RESIDENTS, BUSINESSES, SCHOOLS, AND GENERAL PUBLIC A MINIMUM OF TWO WEEKS PRIOR TO PERFORMING ANY WORK. THESE REQUIREMENTS ARE IN ADDITION TO ANY OTHER REQUIREMENTS SET FORTH BY THE CITY OF VICTORVILLE, CALTRANS, LEWIS LEARNING CENTER, TOWN OF APPLE VALLEY, BNSF, ETC. THE CONTRACTOR SHALL PROVIDE A COMPLETE DESCRIPTION OF THE CONSTRUCTION WORK TO TAKE PLACE AND PROVIDE INFORMATION ON THE IMPACTED AREA. IF UNEXPECTED WORK ARISES AND A TWO-WEEK NOTIFICATION IS NOT POSSIBLE, THE CONTRACTOR IS REQUIRED TO NOTIFY VVWRA AS SOON AS POSSIBLE THEREAFTER AND ASSIST (IF NEEDED) WITH THE DISTRIBUTION OF NOTICES.
23. SPILLAGE RESULTING FROM HAULING OPERATIONS ALONG OR ACROSS ANY PUBLIC TRAVELED WAY SHALL BE REMOVED IMMEDIATELY BY THE CONTRACTOR AT THE CONTRACTOR'S EXPENSE. STREETS ALONG THE HAUL ROUTE SHALL BE SWEPT OR WASHED DAILY, DURING EACH DAY OF HAULING OPERATIONS.
24. CONTRACTOR WILL BE RESPONSIBLE TO OBTAIN A PERMIT FROM THE CITY OF VICTORVILLE FOR ANY CONSTRUCTION ACTIVITIES INCLUDING TRAFFIC CONTROL LOCATED WITHIN PUBLIC RIGHT-OF-WAY.
25. CONTRACTOR SHALL DEVELOP A HEALTH AND SAFETY PLAN DESCRIBING MEASURES THAT WILL BE IMPLEMENTED TO PREVENT EXPOSURE TO WORKERS AND OTHER PEOPLE TO VAPORS OR OTHER HAZARDS DURING CONSTRUCTION. IN ADDITION, THE PLAN MUST ADDRESS THE MAGNITUDE AND EXTENT OF THESE IMPACTS TO SOIL, AIR, AND WATER WITH RESPECT TO PIPELINE CONSTRUCTION AND ASSOCIATED AREAS. THE PLAN MUST DESCRIBE AND IMPLEMENT MEASURES THAT WILL EVALUATE CONSTRUCTION AREA CONDITIONS DAILY TO PROTECT WORKERS AND OTHER PEOPLE FROM EXPOSURE TO VOLATILE ORGANIC COMPOUNDS IN THE SOIL, AIR AND GROUNDWATER.
26. CONTRACTOR SHALL DEVELOP A WASTE CHARACTERIZATION AND MANAGEMENT PLAN THAT WILL ADDRESS THE HANDLING AND DISPOSAL OF SOIL EXCAVATED AND ANY GROUNDWATER ENCOUNTERED. ALL SOIL EXCAVATED WILL NEED TO BE CHARACTERIZED AND PROPERLY STORED, TREATED AND DISPOSED OF. ADDITIONALLY, IF DEWATERING IS NECESSARY, MEASURES DESCRIBING THE CHARACTERIZATION AND MANAGEMENT OF THE WATER GENERATED ARE REQUIRED. TREATMENT AND/OR DISPOSAL OF GROUNDWATER MAY BE SUBJECT TO WASTE DISCHARGE REQUIREMENTS

Pipe Type Chart

From Manhole To Manhole	Size	Material	Joints	Comments
Existing AV-4 AV-3A	15" SDR 35	FPVC	FUSED	OPEN TRENCH ACROSS LEWIS LEARNING CENTER
AV-3A AVS-2	26" DR21	HDPE	FUSED	OPEN TRENCH ACROSS LEWIS LEARNING CENTER
AVS-2 AVS-1	16" DR18 OR 20" DR 9	FPVC OR HDPE	FUSED	HDD UNDER MOJAVE RIVER; MINIMUM PIPE ID = 15.289"; MAXIMUM PIPE ID = 16.183" TWO BARRELS IN ONE HDD BORE HOLE
AVS-1 UNI-9	26" DR21	HDPE	FUSED	OPEN TRENCH ACROSS KEMPER CAMPBELL RANCH
VV 5-9 UNI-11	48" DR21	HDPE	FUSED	OPEN TRENCH ACROSS KEMPER CAMPBELL RANCH
UNI-11 UNI-10	48" DR21	HDPE	FUSED	BORE & JACK ACROSS BNSF
UNI-10 UNI-9	48" DR21	HDPE	FUSED	OPEN TRENCH ACROSS KEMPER CAMPBELL RANCH
UNI-9 UNI-8	48" DR21	HDPE	FUSED	OPEN TRENCH ACROSS KEMPER CAMPBELL RANCH
UNI-8 UNI-7	48" DR21	HDPE	FUSED	TUNNEL ALONG C STREET
UNI-7 UNI-6	48" DR21	HDPE	FUSED	UNDER RCB AT C STREET AND 8th STREET
UNI-6 UNI-5	48" DR21	HDPE	FUSED	OPEN TRENCH ALONG C STREET
UNI-5 UNI-4	48" DR21	HDPE	FUSED	OPEN TRENCH ALONG 7th STREET AND C STREET
UNI-4 UNI-3	48" DR21	HDPE	FUSED	OPEN TRENCH ALONG 7th STREET
UNI-3 UNI-2	48" DR21	HDPE	FUSED	OPEN TRENCH ALONG 7th STREET AND D STREET
UNI-2 UNI-1	48" DR21	HDPE	FUSED	BORE & JACK ACROSS BNSF
UNI-1 VV-25A	48" DR21	HDPE	FUSED	OPEN TRENCH

Casing Size Chart

From Station To Station	Size	Material	Joints	Comments
SEE SHT C-101	60", 0.781" THICK	STEEL	WELDED	BORE & JACK ACROSS BNSF
SEE SHT C-108	60", 0.781" THICK	STEEL	WELDED	BORE & JACK ACROSS BNSF
SEE SHT C-103 THROUGH C-105	66", 0.750" THICK	STEEL	WELDED	TUNNEL ALONG C STREET
SEE SHT C-106 & C-107	TBD BY HDD INSTALLER	STEEL	WELDED	CONDUCTOR CASING FOR HDD UNDER MOJAVE RIVER

LIST OF ABBREVIATIONS

@	AT
#	NUMBER
AB	AGGREGATE BASE
ABAN	ABANDONED
AC	ASPHALT CONCRETE
APPROX	APPROXIMATELY
AV	APPLE VALLEY
AVS	APPLE VALLEY SIPHON
BNSF	BURLINGTON NORTHERN SANTA FE
BVC	BEGIN VERTICAL CURVE
C&G	CURB & GUTTER
CALTRANS	CALIFORNIA DEPARTMENT OF TRANSPORTATION
CB	CATCH BASIN
CF	CURB FACE
CL	CENTERLINE
CLR	CLEAR
CONC	CONCRETE
DIA	DIAMETER
DR	DIMENSION RATIO
DTL	DETAIL
DWG	DRAWING
E	EAST
EF	EACH FACE
EL	ELEVATION
ELEC	ELECTRICAL
EP	EDGE OF PAVEMENT
EVC	END VERTICAL CURVE
EW	EACH WAY
EX, EXIST	EXISTING
FM	FORCE MAIN
FPVC	FUSIBLE POLYVINYL CHLORIDE
', FT	FOOT, FEET
G	GAS
HDD	HORIZONTAL DIRECTIONAL DRILL
HDPE	HIGH DENSITY POLYETHYLENE
HORIZ	HORIZONTAL
ID	INSIDE DIAMETER
", IN	INCH
INV	INVERT
KCR	KEMPER CAMPBELL RANCH
LAT	LATERAL
LF	LINEAR FEET
MH	MANHOLE
MIN	MINIMUM
MISC	MISCELLANEOUS
N	NORTH, NORTHING
NE	NORTHEAST
NTS	NOT TO SCALE
OC	ON CENTER
OD	OUTSIDE DIAMETER
OE	OVERHEAD ELECTRICAL
OT	OVERHEAD TELEPHONE
PL	PROPERTY LINE
PVI	POINT OF VERTICAL INTERSECTION
PVMT	PAVEMENT
R	RADIUS
R/W	RIGHT-OF-WAY
RCB	REINFORCED CONCRETE BOX
REF	REFERENCE
RIM	MANHOLE RIM
R/W	RIGHT-OF-WAY
RR	RAILROAD
S	SOUTH
SAVI	SOUTH APPLE VALLEY INTERCEPTOR
SD	STORM DRAIN
SEC	SECTION
SHT	SHEET
SL	SLOPE
SPEC	SPECIFICATIONS
SS	SANITARY SEWER
SSMH	SANITARY SEWER MANHOLE
SST	STAINLESS STEEL
ST	STREET
STA	STATION
STD	STANDARD
STL	STEEL
T, TEL	TELEPHONE
TBD	TO BE DETERMINED
TBM	TUNNEL BORING MACHINE
TEMP	TEMPORARY
THK	THICK
TOAV	TOWN OF APPLY VALLEY
TOBC	TOP OF BOX CULVERT
TOF	TOP OF FOOTING
TOP	TOP OF PIPE
TOV	TOP OF VALVE
TYP	TYPICAL
UE	UNDERGROUND ELECTRICAL
UG	UNDERGROUND
UNI	UPPER NARROWS INTERCEPTOR
VAR	VARIES
VC	VERTICAL CURVE
VERT	VERTICAL
VV	VICTOR VALLEY

STANDARD SYMBOLS

- CENTERLINE
- RIGHT-OF-WAY
- EASEMENT LINE
- CONCRETE CURB
- CURB & GUTTER
- W — DOMESTIC WATER
- SS — SEWER
- SD — STORM DRAIN
- T — TELEPHONE CABLE OR CONDUIT
- OT — OVERHEAD TELEPHONE CABLE OR CONDUIT
- UE — UNDERGROUND ELECTRICAL
- OE — OVERHEAD ELECTRICAL
- G — GAS
- X — FENCE
- PROPOSED SEWER
- VALVE
- STREET LIGHT
- FIRE HYDRANT
- POWER POLE
- MANHOLE
- TREE
- DETAIL NUMBER / DETAIL SHEET NUMBER
- (A) UTILITY QUALITY LEVEL
- TRENCH PLUG

NOT FOR CONSTRUCTION

TETRA TECH
www.tetratech.com
17885 Von Karman Avenue, Suite 500
Irvine, CA 92614-6213
Tel: (949) 809-5000 Fax: (949) 809-5010

VICTOR VALLEY WASTEWATER RECLAMATION AUTHORITY

MARK	DATE	DESCRIPTION	BY

VVWRA
UPPER NARROWS PIPELINE REPLACEMENT
UTILITY AND AGENCY INDEX, GENERAL NOTES, LIST OF ABBV & STANDARD SYMBOLS

Project No.:	135-09065-11001
Designed By:	DLW
Drawn By:	WVPJ
Checked By:	LEB

G-002

Copyright: Tetra Tech

Bar Measures 1 inch

10/30/2012 1:20:17 PM - P:\09065\135-09065-11001\CAD\SHEETFILES\G-002-GENERALNOTES.DWG - JOHNSON, WILLIE

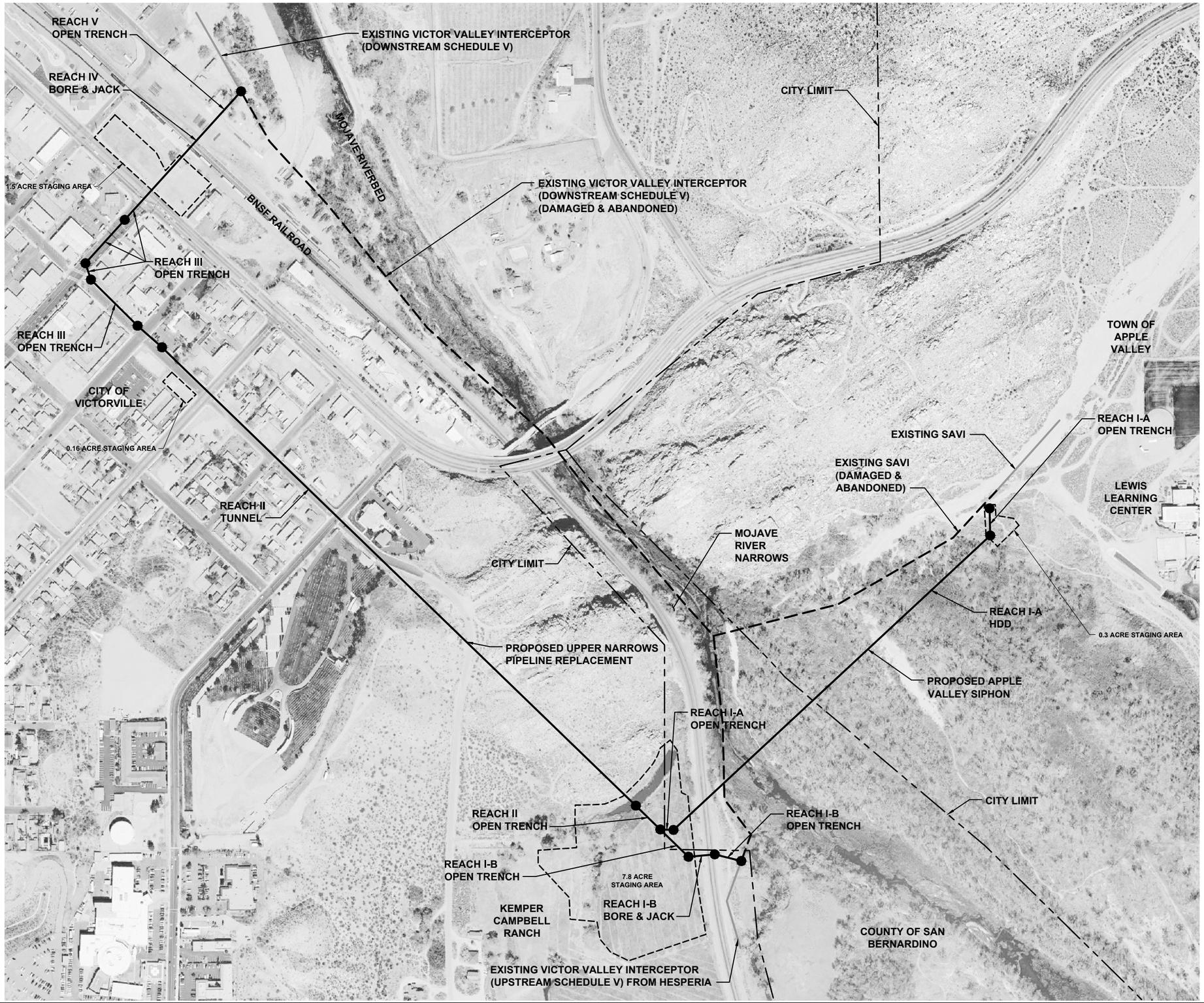

LEGEND

- PROPOSED UPPER NARROWS REPLACEMENT PIPELINE
- EXISTING DAMAGED AND ABANDONED INTERCEPTOR
- EXISTING INTERCEPTOR
- STAGING AREA
- CITY LIMIT

0 100' 200' 400
SCALE: 1"=200'

NOT FOR CONSTRUCTION

TETRA TECH
www.tetratech.com
17885 Von Karman Avenue, Suite 500
Irvine, CA 92614-6213
Tel: (949) 809-5000 Fax: (949) 809-5010

VICTOR VALLEY WASTEWATER RECLAMATION AUTHORITY

MARK	DATE	DESCRIPTION	BY

VVWRA
UPPER NARROWS PIPELINE REPLACEMENT
REACHES

Project No.:	135-09065-11001
Designed By:	DLW
Drawn By:	WVPJ
Checked By:	LEB

G-003

Copyright: Tetra Tech

Bar Measures 1 inch

10/30/2012 12:20:24 PM - P:\09065\135-09065-11001\CAD\SHEETFILES\G-003-REACHES.DWG - JOHNSON, WILLIE

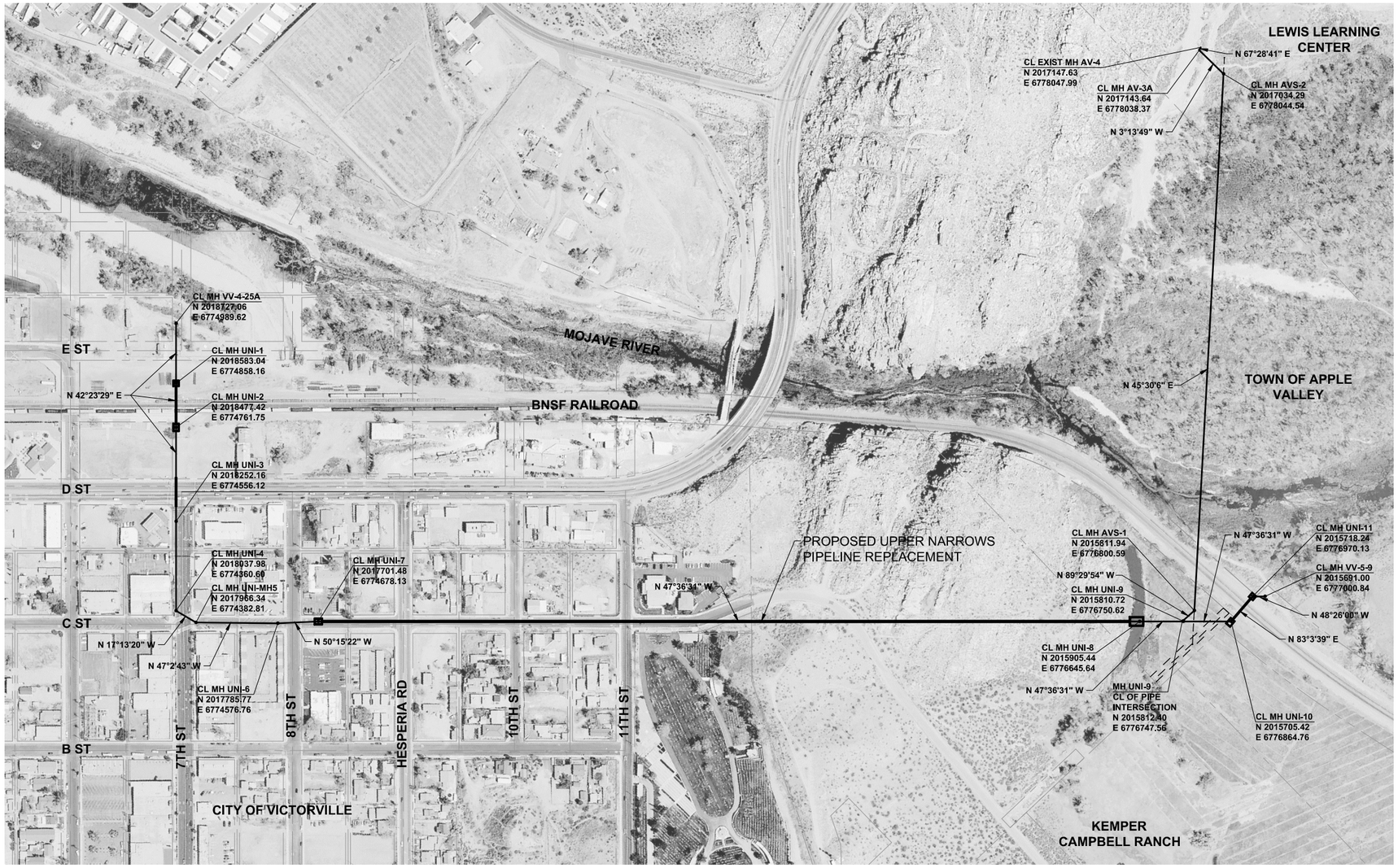

HORIZONTAL CONTROL PLAN

SCALE: 1"=200"

NOTE:
THE CL OF THE MANHOLE IS THE CL OF THE PIPE INTERSECTION UNLESS OTHERWISE NOTED.

0 100' 200' 400'
SCALE: 1"=200'

NOT FOR CONSTRUCTION

TETRA TECH
www.tetratech.com
17885 Von Karman Avenue, Suite 500
Irvine, CA 92614-6213
Tel: (949) 809-5000 Fax: (949) 809-5010

VICTOR VALLEY WASTEWATER RECLAMATION AUTHORITY

MARK	DATE	DESCRIPTION	BY

VVWRA
UPPER NARROWS PIPELINE REPLACEMENT
HORIZONTAL CONTROL

Project No.:	135-09065-11001
Designed By:	DLW
Drawn By:	WVPJ
Checked By:	LEB

V-101

Copyright: Tetra Tech

Bar Measures 1 inch

10/30/2012 1:20:33 PM - P:\09065\135-09065-11001\CAD\SHEETFILES\V-101-HORIZONTALCONTROL.DWG - JOHNSON, WILLIE

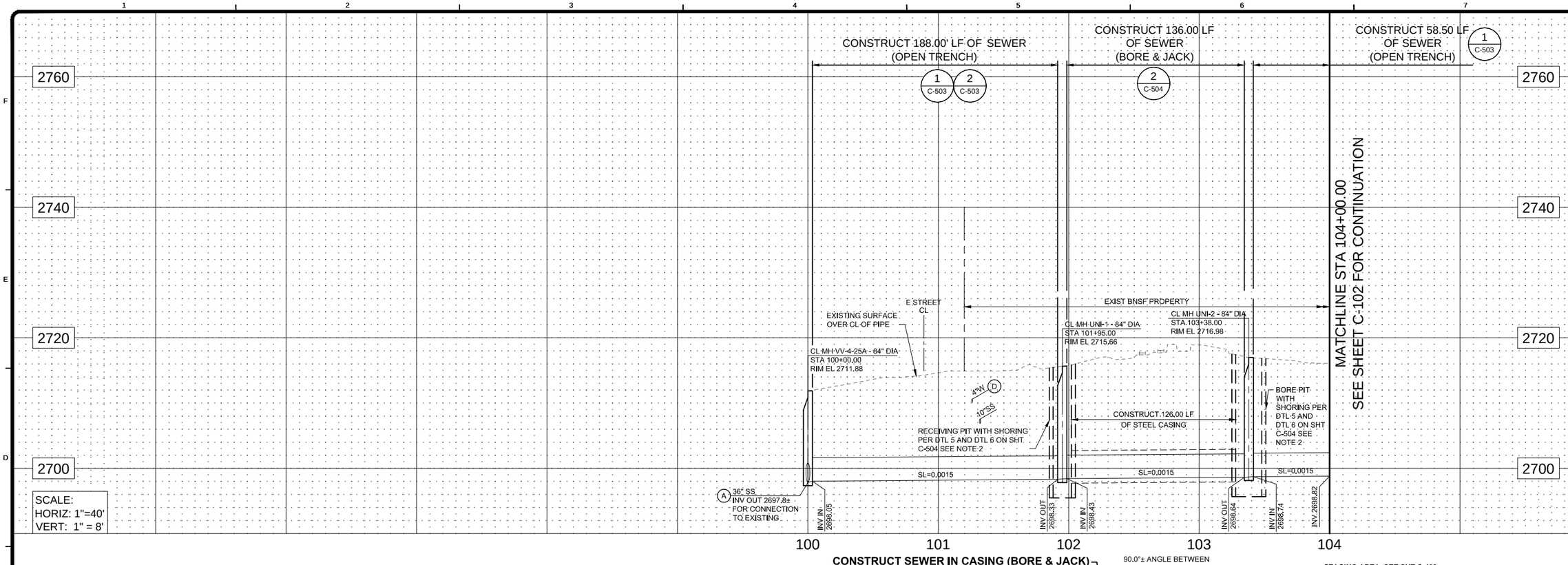

SCALE:
HORIZ: 1"=40'
VERT: 1" = 8'

NOTES:

1. FOR SITE PLAN OF CITY OF VICTORVILLE SEE SHT C-403.
2. BORE PIT AND RECEIVING PIT LOCATIONS AND DIMENSIONS TO BE DETERMINED BY CONTRACTOR. CONTRACTOR SHALL FOLLOW ALL REQUIREMENTS OF BNSF (SEE APPENDIX XX OF SPECIFICATIONS).
3. CONTRACTOR SHALL FIELD VERIFY LOCATION AND DEPTH OF ALL CONNECTION POINTS AND UTILITY CROSSINGS PRIOR TO BEGINNING OF CONSTRUCTION.
4. WHEN CONTAMINATED SOILS OR GROUNDWATER IS ENCOUNTERED, SEE SECTION 01130 AND 01140 OF THE SPECIFICATIONS.
5. CONTRACTOR SHALL MOVE CABOOSE, MOTOR HOME, AND ALL OTHER PROPERTY WHICH IS WITHIN THE PROPOSED VVWRA SEWER INTERCEPTOR ALIGNMENT EASEMENT AND IN THE WAY OF CONSTRUCTION ACTIVITIES PRIOR TO CONSTRUCTION TO A LOCATION SUITABLE TO THE LOCAL RESIDENT ON THE ADJACENT PROPERTY, AND SHALL PROVIDE THE LOCAL RESIDENT WITH EQUIVALENT EXISTING TEMPORARY UTILITIES AT THAT LOCATION. CONTRACTOR SHALL RESTORE ALL MOVED ITEMS TO THEIR PRE-CONSTRUCTION LOCATION AND SHALL RESTORE ALL CONNECTIONS AND UTILITIES TO THE SATISFACTION OF THE LOCAL RESIDENT AFTER CONSTRUCTION IS COMPLETE. CONTRACTOR SHALL RESTORE THE PROPERTY OF THE LOCAL RESIDENT INCLUDING BUT NOT LIMITED TO, ALL ASPHALT PAVING, GRAVEL, ROCKS, UTILITIES, AND GRADING TO ITS PRE-CONSTRUCTION CONDITION TO THE SATISFACTION OF THE LOCAL RESIDENT. FOR EACH TREE ON THE PROPERTY OF THE LOCAL RESIDENT THAT THE CONTRACTOR MUST REMOVE FOR CONSTRUCTION OF THE PROPOSED VVWRA SEWER INTERCEPTOR, CONTRACTOR SHALL RE-PLANT TWO TREES OF THE SAME SPECIES OF MINIMUM 36-INCH BOX IN THE PRE-CONSTRUCTION LOCATION OR IN A LOCATION SUITABLE TO THE LOCAL RESIDENT AFTER CONSTRUCTION IS COMPLETE.
6. FOR PIPE SCHEDULE, SEE SHT G-002.

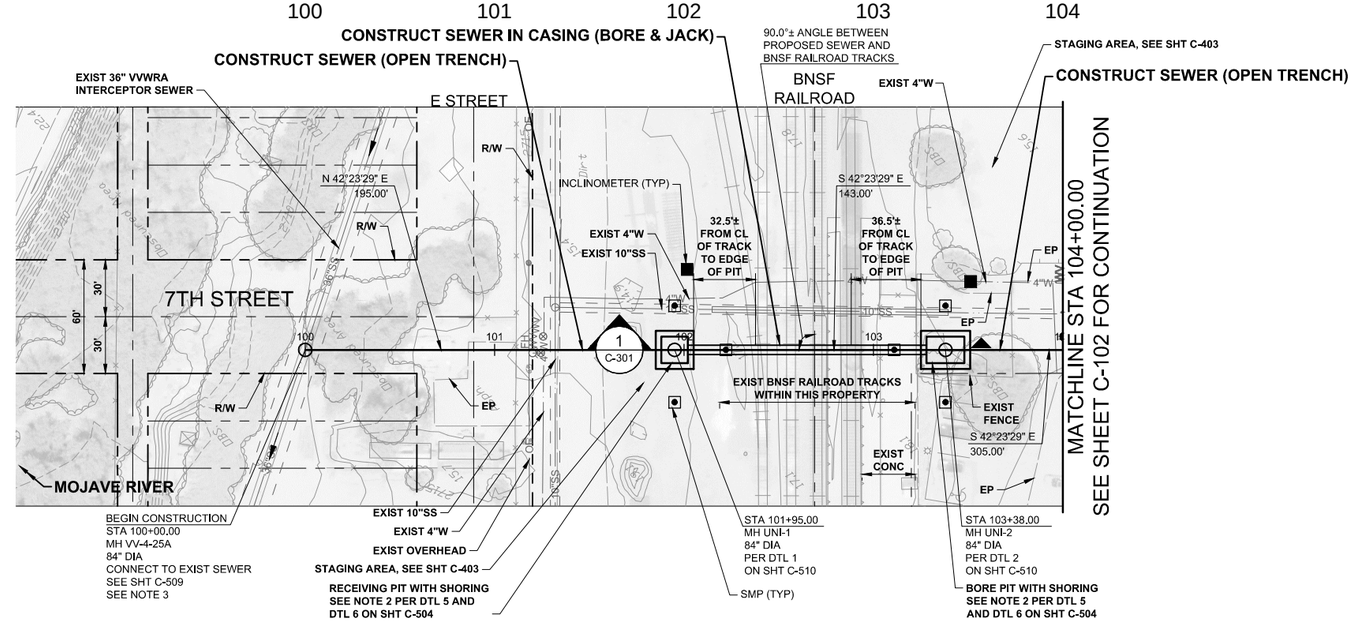

AVERAGE DRY WEATHER FLOW (ADWF)				
FROM MANHOLE	TO MANHOLE	Q (MGD)	d/D	V (FPS)
MH UNI-2	MH UNI-1	6.47	.330	3.42
MH UNI-1	VV 4-25A	6.47	.330	3.42
VV4-25A	EXIST VV-4-25	6.47	.405	3.73

N

0 20' 40' 80'
SCALE: 1:40

NOT FOR CONSTRUCTION

TETRA TECH
www.tetratech.com
17885 Von Karman Avenue, Suite 500
Irvine, CA 92614-6213
Tel: (949) 809-5000 Fax: (949) 809-5010

VICTOR VALLEY WASTEWATER RECLAMATION AUTHORITY

MARK	DATE	DESCRIPTION	BY

VVWRA
UPPER NARROWS PIPELINE REPLACEMENT

PLAN AND PROFILE
STA 100+00.00 TO
STA 104+00.00

Project No.:	135-09065-11001
Designed By:	DLW
Drawn By:	WVPJ
Checked By:	LEB

C-101

Copyright: Tetra Tech

Bar Measures 1 inch

10/30/2012 12:0:41 PM - P:\09065\135-09065-11001\CAD\SHEETFILES\C-101-PLANANDPROFILE.DWG - JOHNSON, WILLIE

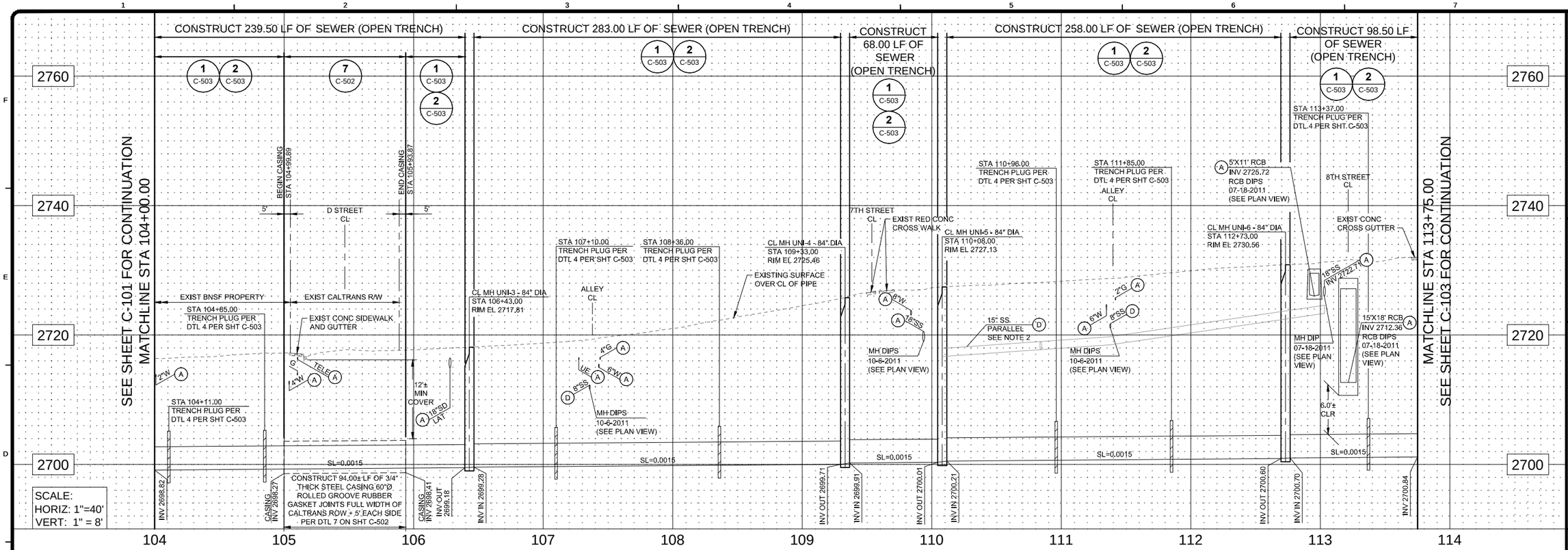

CALTRANS PERMIT NO. 08-12-N-UT-0064

REPLACE EXIST TRAFFIC LOOPS IN KIND PER CALTRANS STD DTL ES-5A & ES-5B

CONSTRUCT 94.00± LF OF 3/4" THICK STEEL CASING 60"Ø ROLLED GROOVE, RUBBER GASKET JOINTS , FULL WIDTH OF CALTRANS ROW +5' EACH SIDE PER DTL 7 ON SHT C-502

STAGING AREA SEE SHT C-403

2"W POTHOLE 10-14-2011 EL 2713.25 TOP

SEWER MH DIP 07-18-2011 4.03' DOWN, 345'± UPSTREAM OF CL OF 7TH ST IN D ST

SEWER MH DIP 10-6-2011 12.23' DOWN, 177'± UPSTREAM OF CL OF 7TH ST IN ALLEY

SEWER MH DIP 10-6-2011 8.78' DOWN

SEWER MH DIP 10-6-2011, 9.25' DOWN

15'x18' RCB DIP, 07-18-2011 17.08' DOWN, 307'± DOWNSTREAM OF CL OF C ST IN 8TH ST

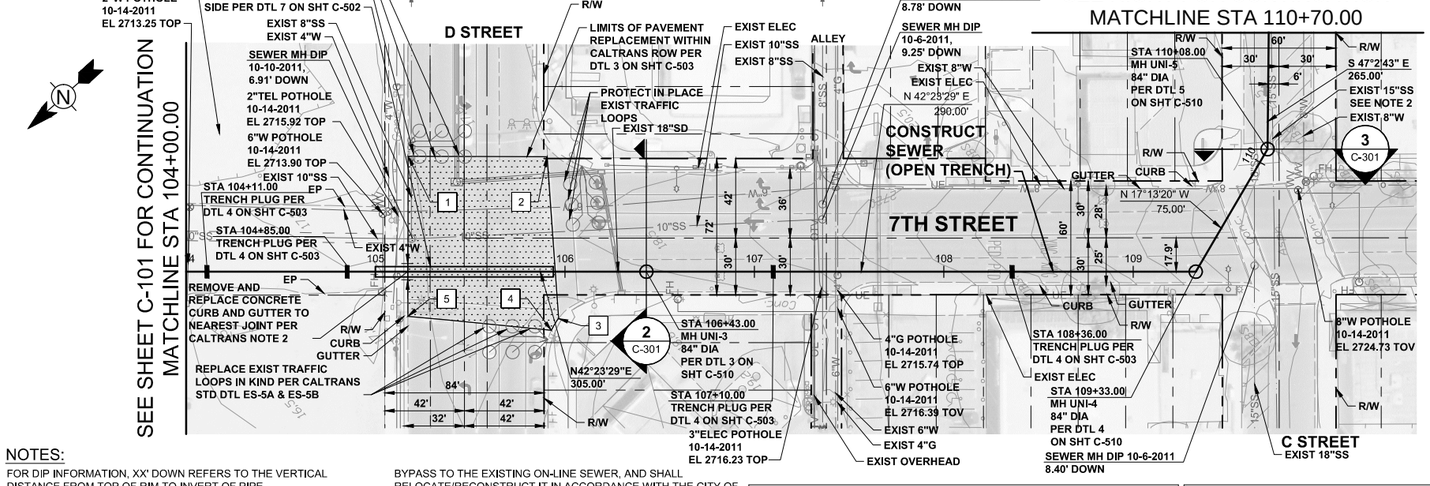

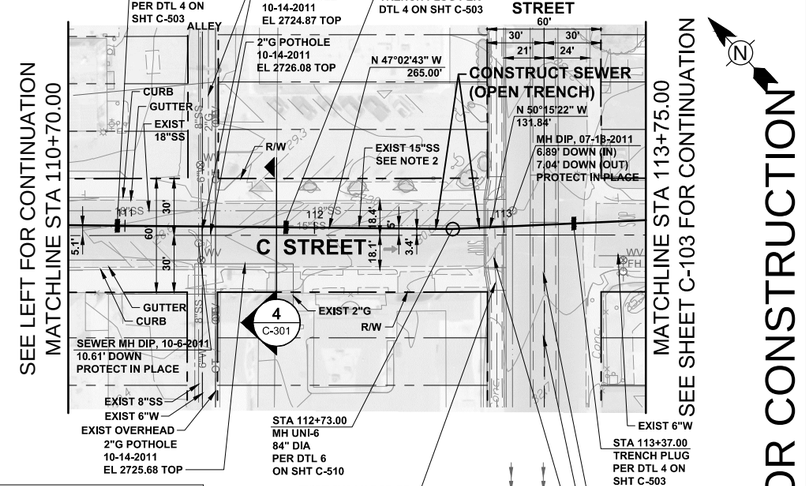

CALTRANS NOTES:

1. CONTRACTOR SHALL INSTALL HOT MIXED ASPHALT (HMA) WITHIN THE ENTIRE D STREET INTERSECTION IN ACCORDANCE WITH CALTRANS SECTION 39, "HOT MIX ASPHALT"
2. PER CALTRANS UG PROVISION UG-21, CONCRETE SIDEWALKS OR CURB SHALL BE SAW CUT TO THE NEAREST SCORE MARKS AND REPLACED EQUAL IN DIMENSION TO THAT REMOVED WITH SCORE MARKS MATCHING EXISTING SIDEWALK OR CURB.

NOTES:

1. FOR DIP INFORMATION, XX' DOWN REFERS TO THE VERTICAL DISTANCE FROM TOP OF RIM TO INVERT OF PIPE.
2. 15" SEWER SHOWN PER PLANS FROM CITY OF VICTORVILLE. EXIST 15" SEWER NOT FOUND BY USA DIGALERT. 15" SEWER SHOWN PER PLANS FROM CITY OF VICTORVILLE. EXIST 15" SEWER NOT FOUND BY USA DIGALERT. CONTRACTOR SHALL CONFIRM THAT 15" SEWER DOES NOT EXIST. IF CONTRACTOR DETERMINES THAT 15" SEWER DOES EXIST AND IS ABANDONED, CONTRACTOR SHALL REMOVE ALL INTERFERING PORTIONS OF SEWER, MANHOLES AND APPURTENANCES. IF CONTRACTOR DETERMINES THAT 15" SEWER DOES EXIST AND IS NOT ABANDONED, CONTRACTOR SHALL NOTIFY THE ENGINEER IMMEDIATELY. THE CONTRACTOR SHALL COORDINATE WITH THE CITY OF VICTORVILLE TO PROVIDE SEWER BYPASS TO THE EXISTING ON-LINE SEWER, AND SHALL RELOCATE/RECONSTRUCT IT IN ACCORDANCE WITH THE CITY OF VICTORVILLE'S REQUIREMENTS. UNDER NO CIRCUMSTANCES WILL ANY ADDITIONAL COST TO VVWRA BE PERMITTED, IN REGARDS TO THE 15" SEWER IN QUESTION.
3. FOR SITE PLAN OF CITY OF VICTORVILLE, SEE SHT C-403.
4. CONTRACTOR SHALL FIELD VERIFY LOCATION AND DEPTH OF ALL CONNECTION POINTS AND UTILITY CROSSINGS PRIOR TO BEGINNING OF CONSTRUCTION.
5. WHEN CONTAMINATED SOILS OR CONTAMINATED GROUNDWATER IS ENCOUNTERED, SEE SECTION 01130 AND 01140 OF THE SPECIFICATIONS.
6. FOR PIPE SCHEDULE, SEE SHT G-002.

COORDINATE TABLE

X	NORTHING	EASTING	DESCRIPTION
1	2018304.00	6774685.90	CORNER OF PAVING LIMIT IN CALTRANS ROW
2	2018249.91	6774636.29	CORNER OF PAVING LIMIT IN CALTRANS ROW
3	2018303.08	6774569.13	CORNER OF PAVING LIMIT IN CALTRANS ROW
4	2018310.48	6774567.51	CORNER OF PAVING LIMIT IN CALTRANS ROW
5	2018361.01	6774623.61	CORNER OF PAVING LIMIT IN CALTRANS ROW

AVERAGE DRY WEATHER FLOW (ADWF)

FROM MANHOLE	TO MANHOLE	Q (MGD)	d/D	V (FPS)
MH UNI-6	MH UNI-5	6.47	.330	3.42
MH UNI-5	MH UNI-4	6.47	.330	3.42
MH UNI-4	MH UNI-3	6.47	.330	3.42
MH UNI-3	MH UNI-2	6.47	.330	3.42

NOT FOR CONSTRUCTION

TETRA TECH
www.tetratech.com
17885 Von Karman Avenue, Suite 500
Irvine, CA 92614-6213
Tel: (949) 809-5000 Fax: (949) 809-5010

VICTOR VALLEY WASTEWATER RECLAMATION AUTHORITY

MARK	DATE	DESCRIPTION	BY

VVWRA
UPPER NARROWS PIPELINE REPLACEMENT

PLAN AND PROFILE
STA 104+00.00 TO
STA 113+75.00

Project No.:	135-09065-11001
Designed By:	DLW
Drawn By:	WVPJ
Checked By:	LEB

C-102

Copyright: Tetra Tech

Bar Measures 1 inch

10/30/2012 12:00:54 PM - P:\09065\135-09065-11001\CAD\SHEETFILES\C-102-PLANANDPROFILE.DWG - JOHNSON, WILLIE

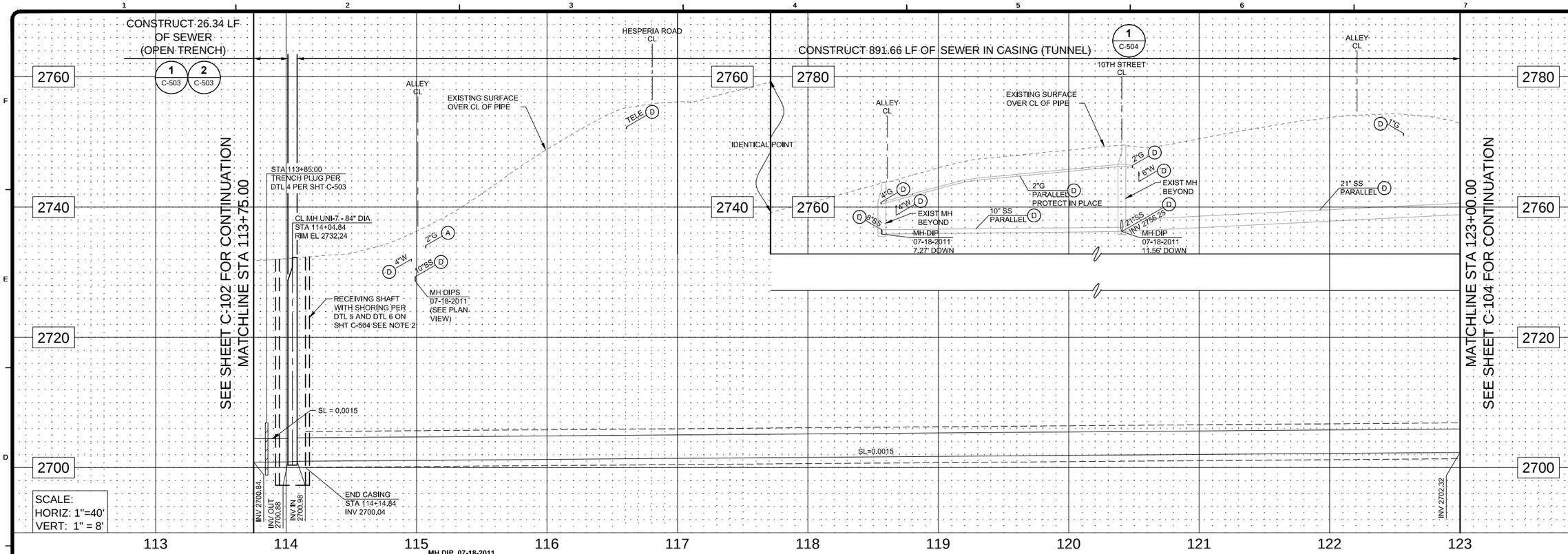

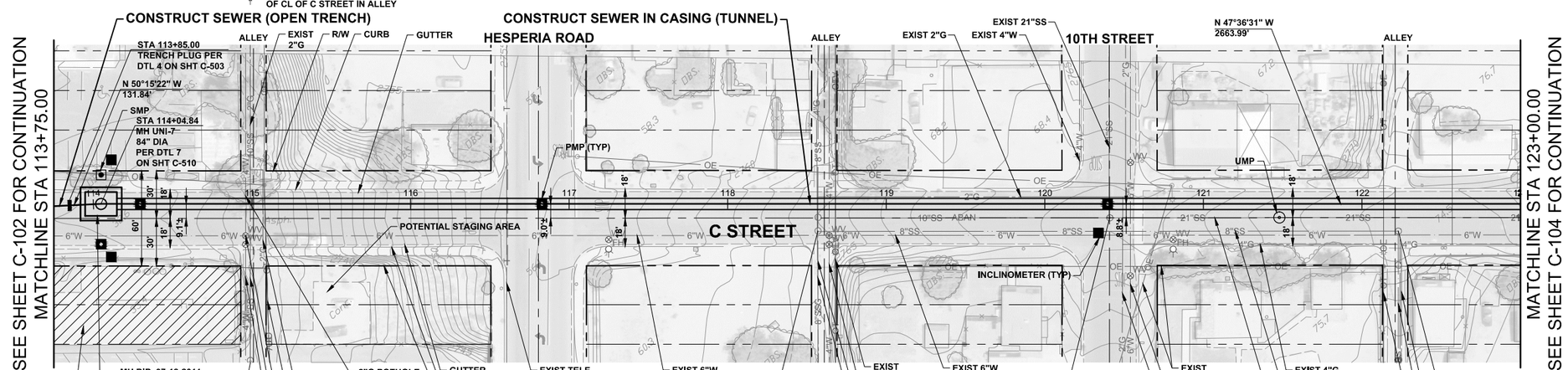

AVERAGE DRY WEATHER FLOW (ADWF)				
FROM MANHOLE	TO MANHOLE	Q (MGD)	d/D	V (FPS)
MH UNI-7	MH UNI-6	6.47	.335	3.35

NOTES:

1. CONTRACTOR SHALL FIELD VERIFY LOCATION AND DEPTH OF ALL CONNECTION POINTS AND UTILITY CROSSINGS PRIOR TO THE BEGINNING OF CONSTRUCTION.
2. LAUNCHING AND RECEIVING SHAFT LOCATIONS AND DIMENSIONS TO BE DETERMINED BY CONTRACTOR.
3. FOR DIP INFORMATION, XX' DOWN REFERS TO THE VERTICAL DISTANCE FROM TOP OF RIM TO INVERT OF PIPE.
4. WHEN CONTAMINATED SOILS OR GROUNDWATER IS ENCOUNTERED, SEE SECTION 01130 AND 01140 OF THE SPECIFICATIONS.
5. FOR PIPE SCHEDULE, SEE SHT G-002.

NOT FOR CONSTRUCTION

SCALE: 1:40

TETRA TECH
www.tetratech.com
17885 Von Karman Avenue, Suite 500
Irvine, CA 92614-6213
Tel: (949) 809-5000 Fax: (949) 809-5010

VICTOR VALLEY WASTEWATER RECLAMATION AUTHORITY

MARK	DATE	DESCRIPTION	BY

VVWRA
UPPER NARROWS PIPELINE REPLACEMENT

PLAN AND PROFILE
STA 113+75.00 TO
STA 123+00.00

Project No.:	135-09065-11001
Designed By:	DLW
Drawn By:	WVPJ
Checked By:	LEB

C-103

Copyright: Tetra Tech

Bar Measures 1 inch

10/30/2012 1:21:03 PM - P:\09065\135-09065-11001\CAD\SHEETFILES\C-103-PLAN\AND\PROFILE.DWG - JOHNSON, WILLIE

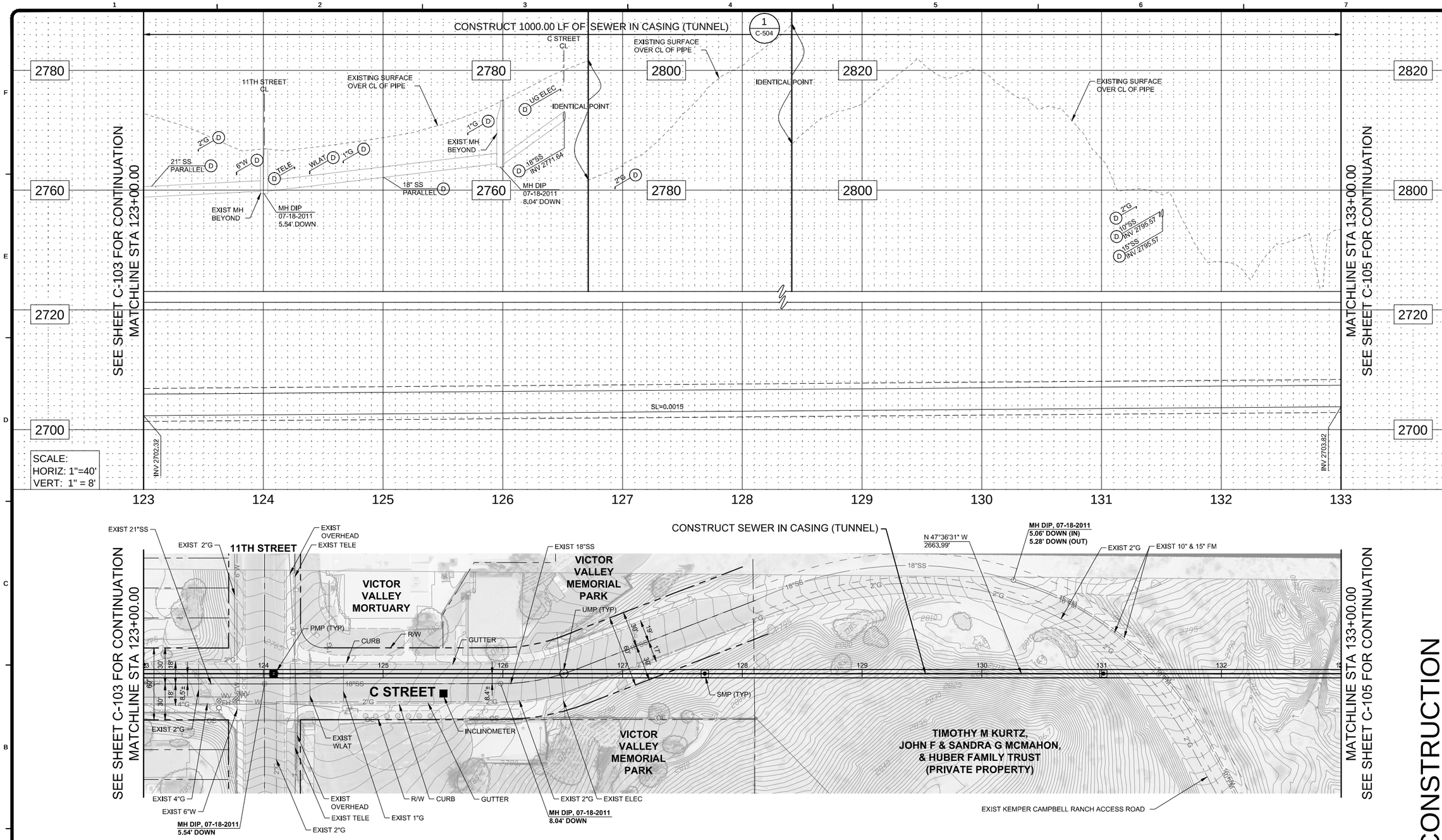

AVERAGE DRY WEATHER FLOW (ADWF)				
FROM MANHOLE	TO MANHOLE	Q (MGD)	d/D	V (FPS)
MH UNI-2	MH UNI-1	6.47	.330	3.42
MH UNI-1	VV 4-25A	6.47	.330	3.42
VV4-25A	EXIST VV-4-25	6.47	.405	3.73

NOTE:

1. FOR DIP INFORMATION, XX' DOWN REFERS TO THE VERTICAL DISTANCE FROM TOP OF RIM TO INVERT OF PIPE.
2. CONTRACTOR SHALL FIELD VERIFY LOCATION AND DEPTH OF ALL CONNECTION POINTS AND UTILITY CROSSINGS PRIOR TO BEGINNING OF CONSTRUCTION.
3. FOR PIPE SCHEDULE, SEE SHT G-002.

0 20' 40' 80'
SCALE: 1:40

NOT FOR CONSTRUCTION

TETRA TECH
www.tetratech.com
17885 Von Karman Avenue, Suite 500
Irvine, CA 92614-6213
Tel: (949) 809-5000 Fax: (949) 809-5010

VICTOR VALLEY WASTEWATER RECLAMATION AUTHORITY

MARK	DATE	DESCRIPTION	BY

VVWRA
UPPER NARROWS PIPELINE REPLACEMENT

PLAN AND PROFILE
STA 123+00.00 TO
STA 133+00.00

Project No.:	135-09065-11001
Designed By:	DLW
Drawn By:	WVPJ
Checked By:	LEB

C-104

Copyright: Tetra Tech

Bar Measures 1 inch

10/30/2012 1:21:14 PM - P:\09065\135-09065-11001\CAD\SHEETFILES\C-104-PLANANDPROFILE.DWG - JOHNSON, WILLIE

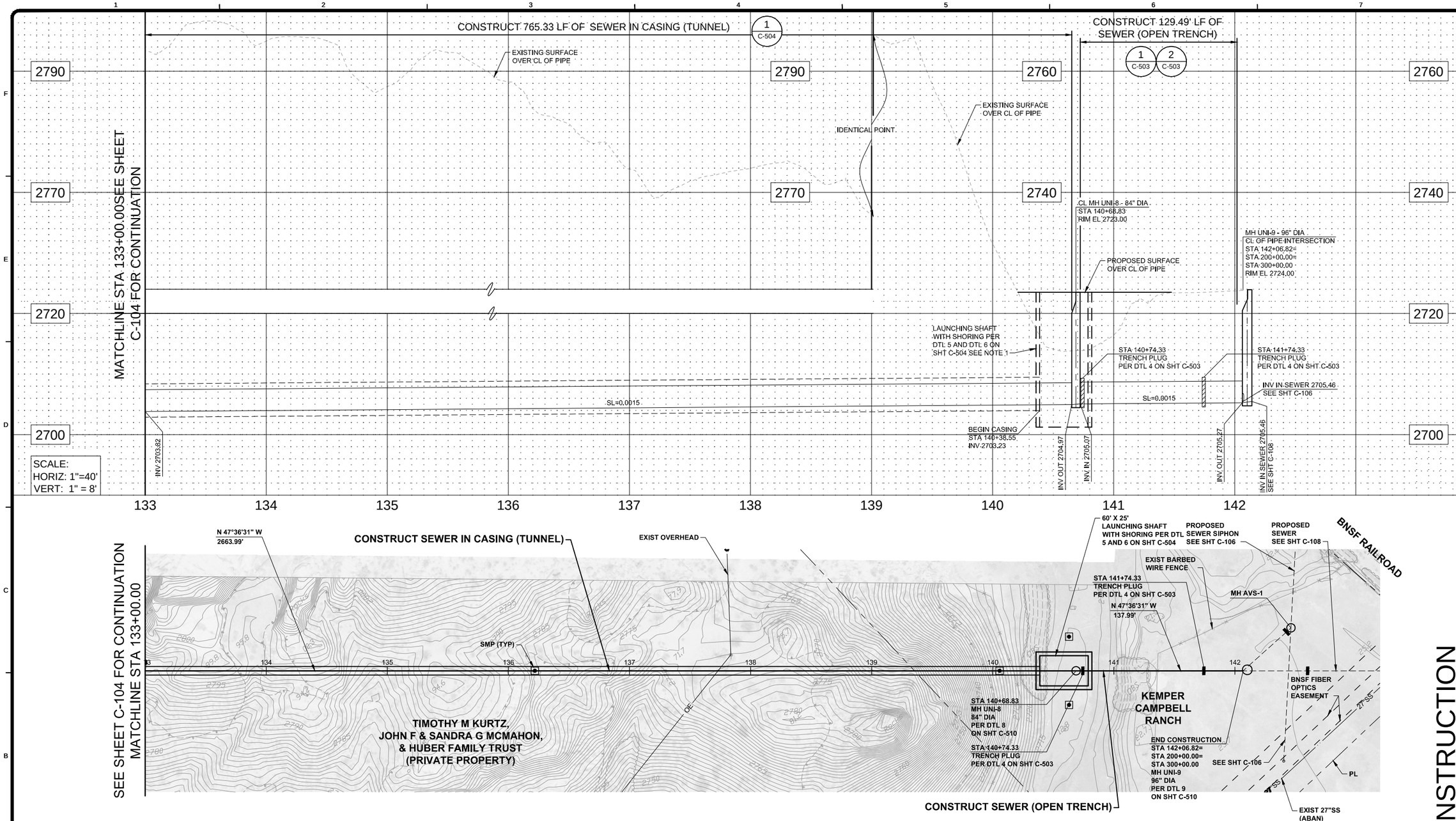

AVERAGE DRY WEATHER FLOW (ADWF)				
FROM MANHOLE	TO MANHOLE	Q (MGD)	d/D	V (FPS)
MH UNI-9	MH UNI-8	6.47	.330	3.42
MH UNI-8	MH UNI-7	6.47	.330	3.42

NOTES:

1. FOR SITE PLAN OF KEMPER CAMPBELL SEE SHT C-402.
2. CONTRACTOR SHALL FIELD VERIFY LOCATION AND DEPTH OF ALL CONNECTION POINTS AND UTILITY CROSSINGS PRIOR TO BEGINNING OF CONSTRUCTION.
3. FOR PIPE SCHEDULE, SEE SHT G-002.

N

0 20' 40' 80'
SCALE: 1:40

NOT FOR CONSTRUCTION

TETRA TECH
www.tetratech.com
17885 Von Karman Avenue, Suite 500
Irvine, CA 92614-6213
Tel: (949) 809-5000 Fax: (949) 809-5010

VICTOR VALLEY WASTEWATER RECLAMATION AUTHORITY

MARK	DATE	DESCRIPTION	BY

VVWRA
UPPER NARROWS PIPELINE REPLACEMENT

PLAN AND PROFILE
STA 133+00.00 TO
STA 142+06.82

Project No.:	135-09065-11001
Designed By:	DLW
Drawn By:	WVPJ
Checked By:	LEB

C-105

Copyright: Tetra Tech

Bar Measures 1 inch

10/30/2012 1:21:23 PM - P:\09065\135-09065-11001\CAD\SHEETFILES\C-105-PLANANDPROFILE.DWG - JOHNSON, WILLIE

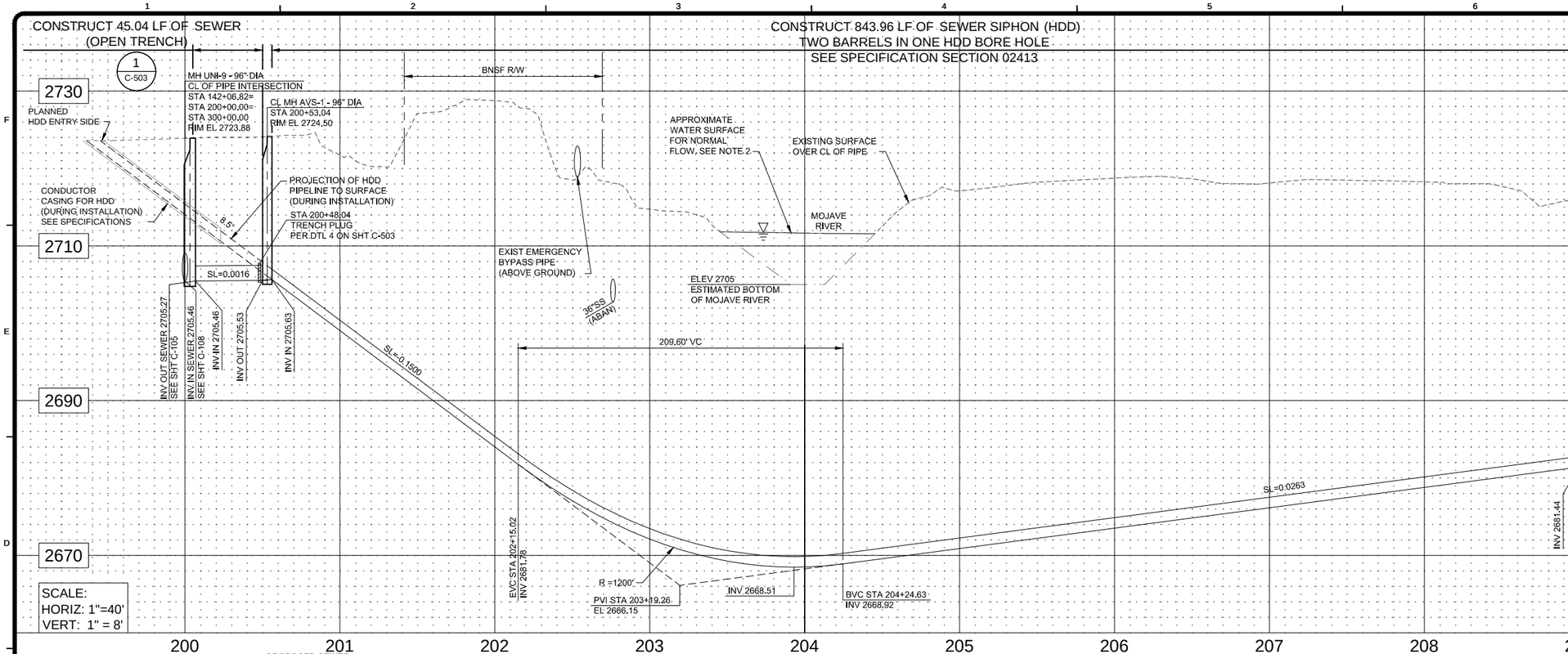

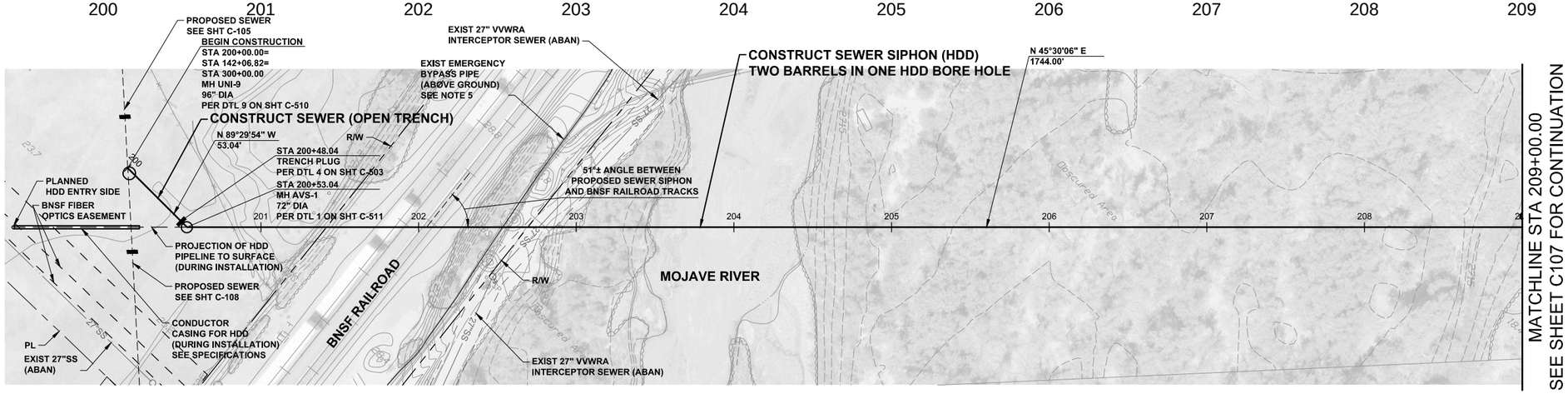

AVERAGE DRY WEATHER FLOW (ADWF)				
FROM MANHOLE	TO MANHOLE	Q (MGD)	d/D	V (FPS)
MH AVS-1	MH UNI-9	1.81	.395	2.56

NOTE:

1. CONTRACTOR SHALL FIELD VERIFY LOCATION AND DEPTH OF ALL CONNECTION POINTS AND UTILITY CROSSINGS PRIOR TO THE BEGINNING OF CONSTRUCTION.
2. MOJAVE RIVER ESTIMATED TO BE 6' DEEP AT TIME OF SURVEY. SEE THE USGS CALIFORNIA HYDROLOGICAL REPORT 10261500 MOJAVE RIVER AT LOWER NARROWS, NEAR VICTORVILLE, CA FOR FLOW DATA AT 'MOJAVE RIVER AT LOWER NARROWS' STATION APPROXIMATELY 3.5 MILES DOWNSTREAM FROM SITE. SEE APPENDIX.
3. FOR SITE PLAN OF KEMPER CAMPBELL RANCH, SEE SHT C-402.
4. FOR PIPE SCHEDULE, SEE SHT G-002.
5. EXISTING EMERGENCY BYPASS SHALL BE PROTECTED IN PLACE AND REMAIN IN OPERATION UNTIL CONSTRUCTION OF UPPER NARROWS REPLACEMENT PIPELINE IS COMPLETE IN PLACE, TESTED AND ACCEPTED BY VVWRA.

N

0 20' 40' 80'
SCALE: 1:40

NOT FOR CONSTRUCTION

TETRA TECH
www.tetratech.com
17885 Von Karman Avenue, Suite 500
Irvine, CA 92614-6213
Tel: (949) 809-5000 Fax: (949) 809-5010

VICTOR VALLEY WASTEWATER RECLAMATION AUTHORITY

MARK	DATE	DESCRIPTION	BY

VVWRA
UPPER NARROWS PIPELINE REPLACEMENT

PLAN AND PROFILE
STA 200+00.00 TO
STA 209+00.00

Project No.:	135-09065-11001
Designed By:	DLW
Drawn By:	WVPJ
Checked By:	LEB

C-106

Copyright: Tetra Tech

Bar Measures 1 inch

10/30/2012 1:21:33 PM - P:\09065\135-09065-11001\CAD\SHEETFILES\C-106-PLANANDPROFILE.DWG - JOHNSON, WILLIE

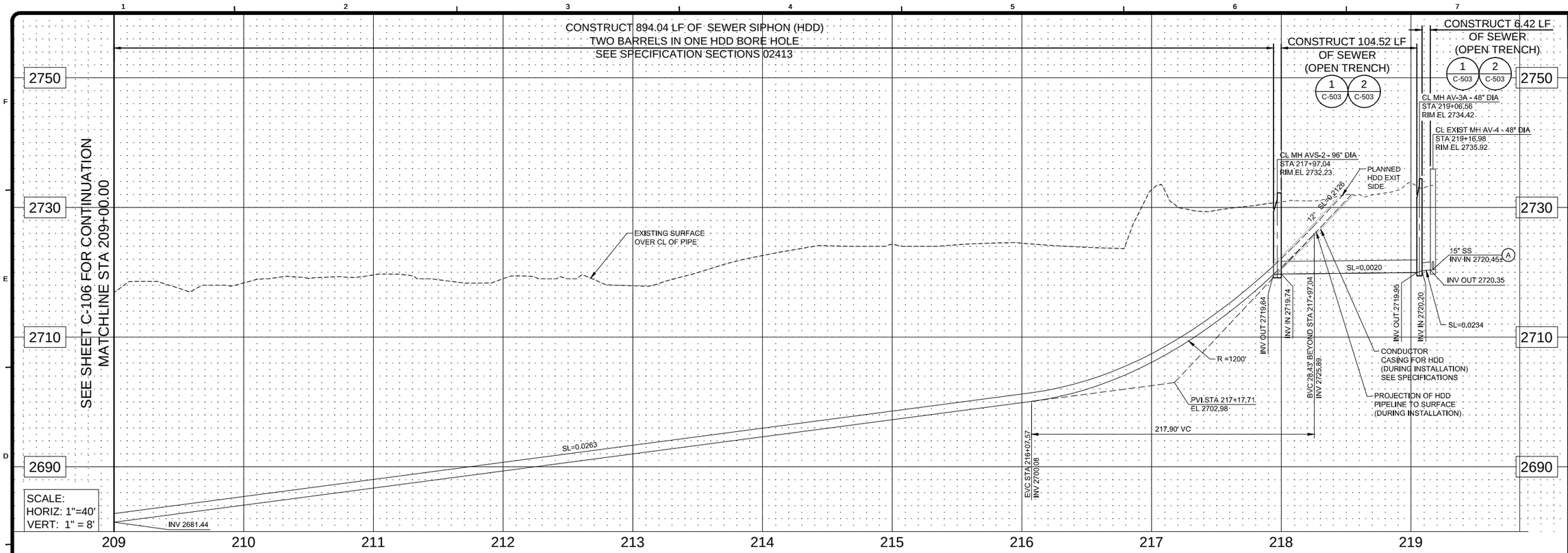

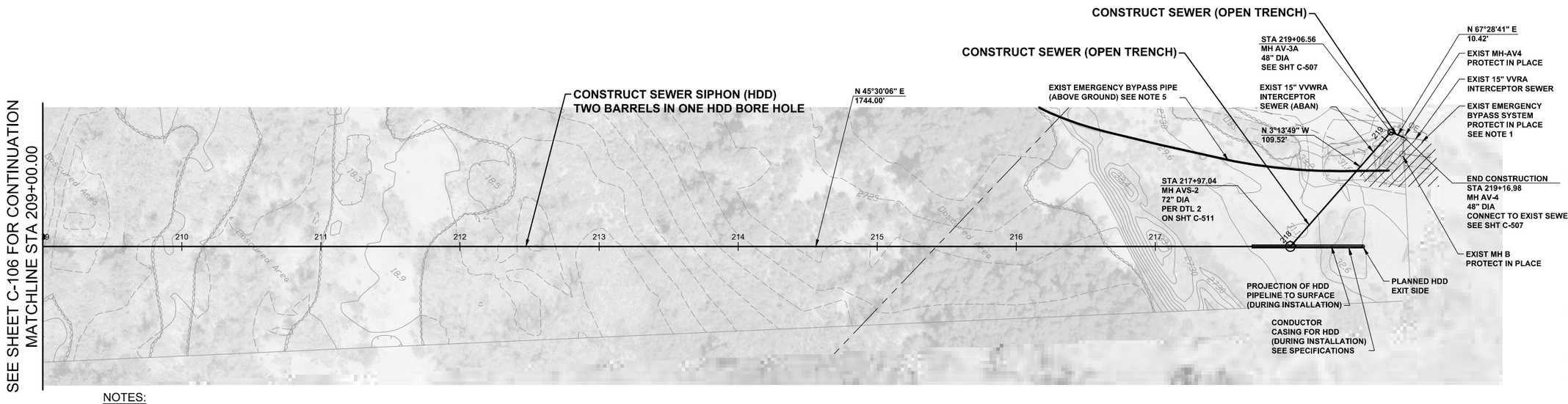

NOTES:

1. SEE SHEET C-507 FOR SEWER BYPASS MODIFICATIONS.
2. FOR SITE PLAN OF HDD PIPE LAYDOWN, SEE SHT C-404.
3. CONTRACTOR SHALL FIELD VERIFY LOCATION AND DEPTH OF ALL CONNECTION POINTS AND UTILITY CROSSINGS PRIOR TO BEGINNING OF CONSTRUCTION.
4. FOR PIPE SCHEDULE, SEE SHT G-002
5. EXISTING EMERGENCY BYPASS SHALL BE PROTECTED IN PLACE AND REMAIN IN OPERATION UNTIL CONSTRUCTION OF UPPER NARROWS REPLACEMENT PIPELINE IS COMPLETE IN PLACE, TESTED AND ACCEPTED BY VVWRA.

AVERAGE DRY WEATHER FLOW (ADWF)

FROM MANHOLE	TO MANHOLE	Q (MGD)	d/D	V (FPS)
EXIST MH AV-4	MH AV-3A	1.81	.360	7.04
MH AV-3A	MH AVS-2	1.81	.370	2.79
MH AVS-2	MH AVS-1	-	-	-

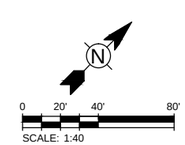

NOT FOR CONSTRUCTION

TETRA TECH
www.tetratech.com
17885 Von Karman Avenue, Suite 500
Irvine, CA 92614-6213
Tel: (949) 809-5000 Fax: (949) 809-5010

VICTOR VALLEY WASTEWATER RECLAMATION AUTHORITY

MARK	DATE	DESCRIPTION	BY

VVWRA
UPPER NARROWS PIPELINE REPLACEMENT

PLAN AND PROFILE
STA 209+00.00 TO
STA 219+16.98

Project No.:	135-09065-11001
Designed By:	DLW
Drawn By:	WVPJ
Checked By:	LEB

C-107

Copyright: Tetra Tech

Bar Measures 1 inch

10/30/2012 1:21:41 PM - P:\09065\135-09065-11001\CAD\SHEETFILES\C-107-PLANANDPROFILE.DWG - JOHNSON, WILLIE

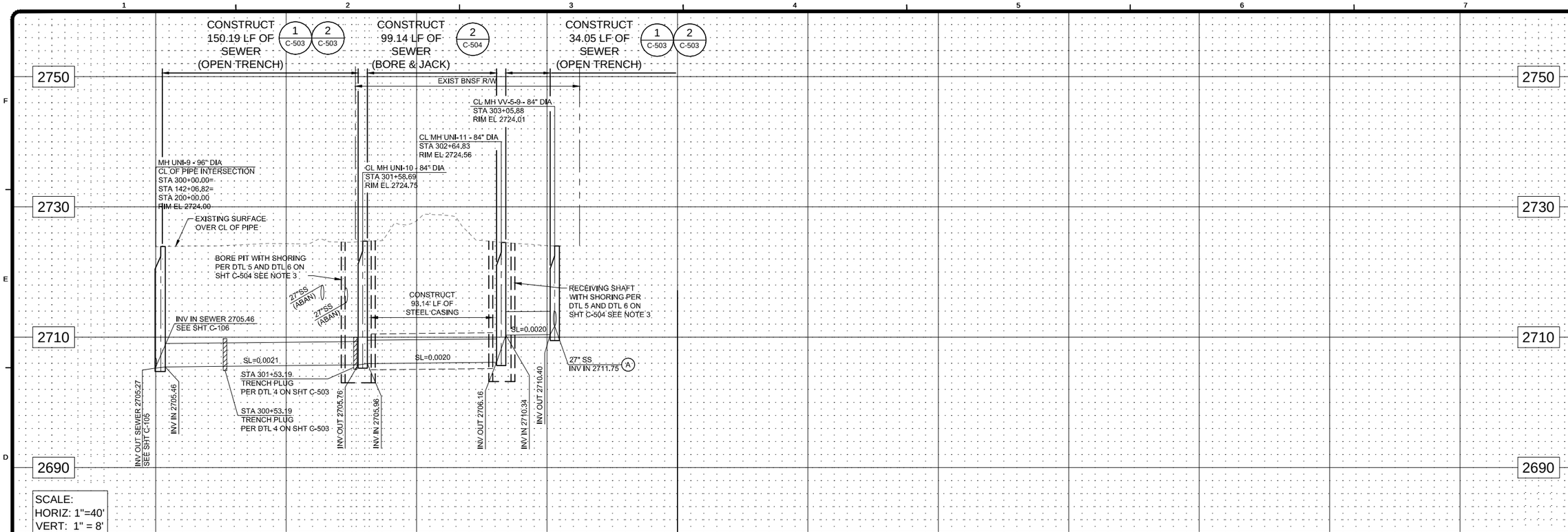

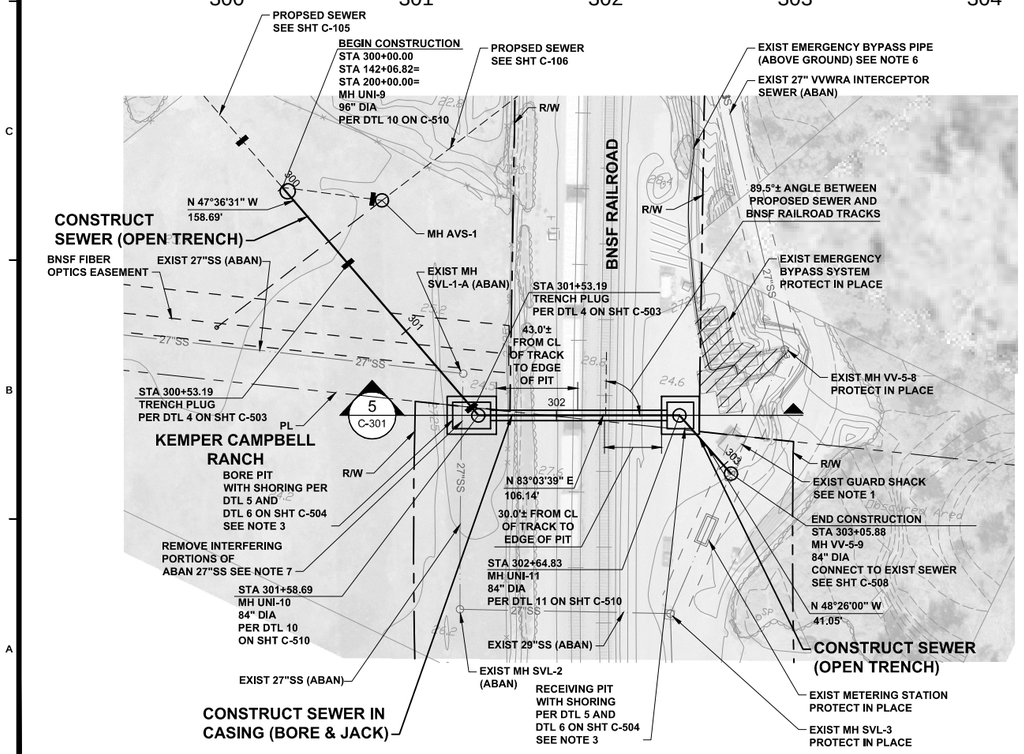

AVERAGE DRY WEATHER FLOW (ADWF)				
FROM MANHOLE	TO MANHOLE	Q (MGD)	d/D	V (FPS)
EXIST METERING STATION	MH VV 5-9	4.66	.270	8.32
MH VV 5-9	MH UNI-11	4.66	.265	3.34
MH UNI-11	MH UNI-10	4.66	.260	3.43
MH UNI-10	MH UNI-9	4.66	.260	3.43

NOTE:

1. CONTRACTOR SHALL RELOCATE EXIST GUARD SHACK NEARBY ON SITE. CONTRACTOR SHALL COORDINATE WITH VVWRA.
2. FOR SITE PLAN OF KEMPER CAMPBELL RANCH, SEE SHT C-402.
3. BORE PIT AND RECEIVING PIT LOCATIONS AND DIMENSIONS TO BE DETERMINED BY CONTRACTOR. CONTRACTOR SHALL FOLLOW ALL REQUIREMENTS OF BNSF (SEE APPENDIX XX OF SPECIFICATIONS).
4. CONTRACTOR SHALL FIELD VERIFY LOCATION AND DEPTH OF ALL CONNECTION POINTS AND UTILITY CROSSINGS PRIOR TO BEGINNING OF CONSTRUCTION.
5. FOR PIPE SCHEDULE, SEE SHT G-002.
6. EXISTING EMERGENCY BYPASS SHALL BE PROTECTED IN PLACE AND REMAIN IN OPERATION UNTIL CONSTRUCTION OF UPPER NARROWS REPLACEMENT PIPELINE IS COMPLETE IN PLACE, TESTED AND ACCEPTED BY VVWRA.
7. CONTRACTOR SHALL ASSUME ABAN 27"SS IS FULL OF RAW SEWEGE/SLUDGE. PIPE & CONTENTS SHALL BECOME PROPERTY OF THE XXXX AND DISPOSED IN A MANNER ACCEPTABLE TO ALL JURISDITIONAL AGENCIES.

N

0 20' 40' 80'
SCALE: 1:40

NOT FOR CONSTRUCTION

TETRA TECH
www.tetratech.com
17885 Von Karman Avenue, Suite 500
Irvine, CA 92614-6213
Tel: (949) 809-5000 Fax: (949) 809-5010

VICTOR VALLEY WASTEWATER RECLAMATION AUTHORITY

MARK	DATE	DESCRIPTION	BY

VVWRA
UPPER NARROWS PIPELINE REPLACEMENT

PLAN AND PROFILE
STA 300+00.00 TO
STA 303+05.88

Project No.:	135-09065-11001
Designed By:	DLW
Drawn By:	WVPJ
Checked By:	LEB

C-108

Copyright: Tetra Tech

Bar Measures 1 inch

10/30/2012 1:21:50 PM - P:\09065\135-09065-11001\CAD\SHEETFILES\C-108-PLANANDPROFILE.DWG - JOHNSON, WILLIE

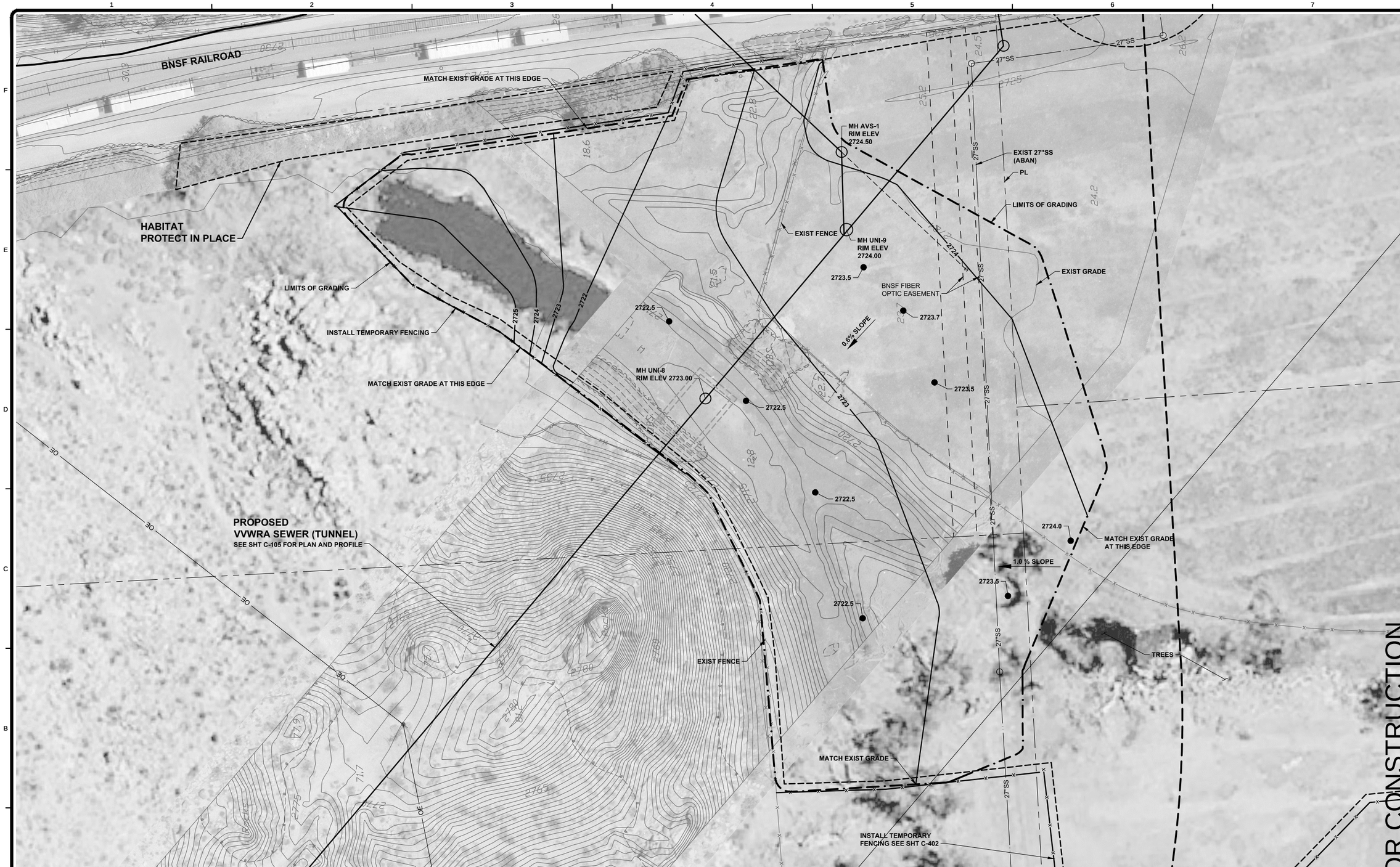

CONTRACTOR TO SUBCONTRACT WITH KEMPER CAMPBELL RANCH MANAGER, LEE GRAHAM, DIRECTLY FOR THE PERFORMANCE OF THE FOLLOWING WORK:

1. PERFORM ROUGH AND FINAL GRADING AND SITE RESTORATION OF KEMPER CAMPBELL RANCH.
2. CONTRACTOR AND/OR SUBCONTRACTOR SHALL MATCH EXITING SLOPE AND ELEVATIONS AS SHOWN AT EDGE OF GRADING LIMITS.
3. CONTRACTOR AND/OR SUBCONTRACTOR SHALL NOT PLACE SOIL OVER THE TOP OF THE AREAS UNDERNEATH THE TREE DRIP LINE.

NOT FOR CONSTRUCTION

SCALE: 1:100

Bar Measures 1 inch

TETRA TECH
www.tetratech.com
17885 Von Karman Avenue, Suite 500
Irvine, CA 92614-6213
Tel: (949) 809-5000 Fax: (949) 809-5010

VICTOR VALLEY WASTEWATER RECLAMATION AUTHORITY

MARK	DATE	DESCRIPTION	BY

VVWRA
UPPER NARROWS PIPELINE REPLACEMENT

GRADING PLAN

Project No.: 135-09065-11001
Designed By:
Drawn By:
Checked By:

C-109

Copyright: Tetra Tech

10/30/2012 1:22:05 PM - P:\09065\135-09065-11001\CAD\SHEETFILES\C-109-GRADINGPLAN.DWG - JOHNSON, WILLIE

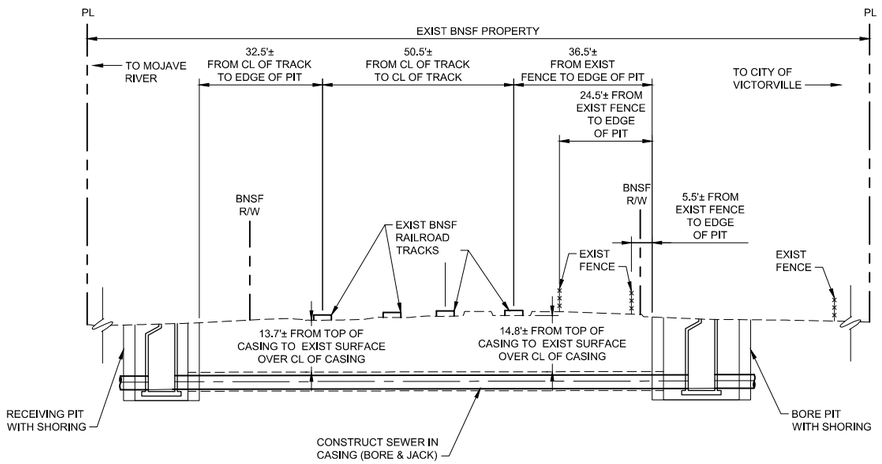

1 – SECTION AT BNSF RAILROAD CROSSING IN-LINE WITH 7TH STREET

SCALE: 1" = 20'
SEE SHT C-101 FOR PLAN AND PROFILE

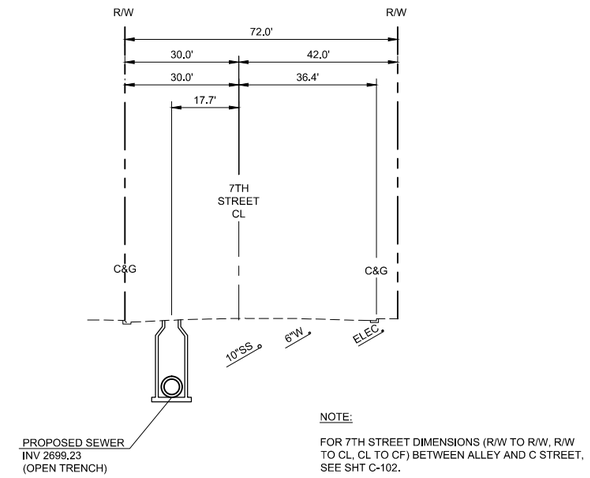

NOTE:

FOR 7TH STREET DIMENSIONS (R/W TO R/W, R/W TO CL, CL TO CF) BETWEEN ALLEY AND C STREET, SEE SHT C-102.

2 – CROSS SECTION AT 7TH STREET STA 106+43.00

SCALE: 1" = 20'
SEE SHT C-102 FOR PLAN AND PROFILE

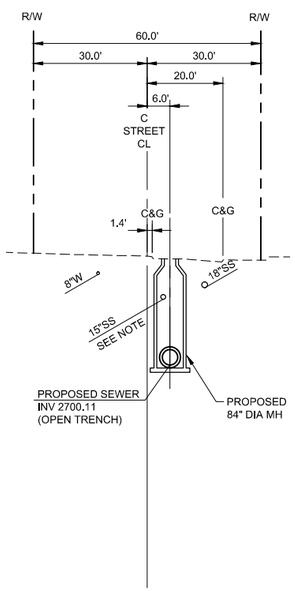

3 – CROSS SECTION AT C STREET STA 110+08.00

SCALE: 1" = 20'
SEE SHT C-102 FOR PLAN AND PROFILE

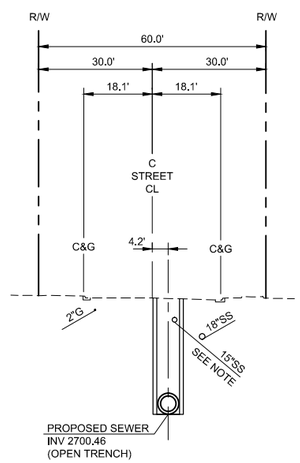

4 – CROSS SECTION AT C STREET STA 111+80.00

SCALE: 1" = 20'
SEE SHT C-102 FOR PLAN AND PROFILE

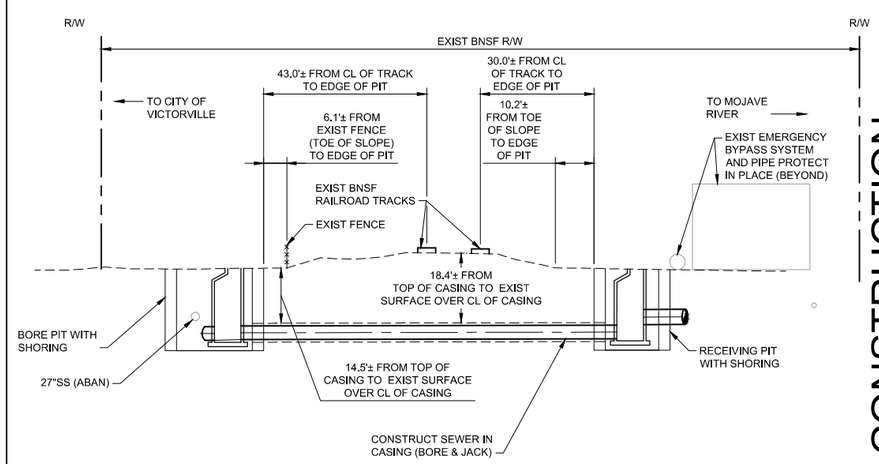

5 – SECTION AT BNSF RAILROAD CROSSING NEAR KEMPER CAMPBELL RANCH

SCALE: 1" = 20'
SEE SHT C-108 FOR PLAN AND PROFILE

0 10' 20' 40'
SCALE: 1" = 20'_XREF

NOT FOR CONSTRUCTION

TETRA TECH
www.tetratech.com
17885 Von Karman Avenue, Suite 500
Irvine, CA 92614-6213
Tel: (949) 809-5000 Fax: (949) 809-5010

VICTOR VALLEY WASTEWATER RECLAMATION AUTHORITY

MARK	DATE	DESCRIPTION	BY

VVWRA
UPPER NARROWS PIPELINE REPLACEMENT
CIVIL SECTIONS

Project No.:	135-09065-11001
Designed By:	DLW
Drawn By:	LEG
Checked By:	LEB

C-301

Bar Measures 1 inch

Copyright: Tetra Tech

10/30/2012 1:22:09 PM - P:\09065\135-09065-11001\CAD\SHEETFILES\C-301-CIVILSECTIONS.DWG - JOHNSON, WILLIE

EXISTING VVWRA INTERCEPTOR SEWER REMOVAL NOTES:

1. CONTRACTOR SHALL CLEAN THE EXIST 36" VVWRA INTERCEPTOR SEWER BETWEEN PROPOSED MH VV-4-25A AND EXIST MH VV-5-1 AND FILL THE ABANDONED PIPELINE WITH SAND SLURRY. SEE SHT C-509 FOR NOTES REGARDING THE SEQUENCE OF CONSTRUCTION.
2. CONTRACTOR SHALL CLEAN THE EXIST 27" VVWRA INTERCEPTOR SEWER BETWEEN PROPOSED MH VV-5-9 AND EXIST MH VV-5-8 AND FILL THE ABANDONED PIPELINE WITH SAND SLURRY. SEE SHT C-508 FOR NOTES REGARDING THE SEQUENCE OF CONSTRUCTION.
3. CONTRACTOR SHALL CLEAN THE EXIST 15" VVWRA INTERCEPTOR SEWER BETWEEN PROPOSED MH AV-3A AND EXIST MH AV-3 AND FILL THE ABANDONED PIPELINE WITH SAND SLURRY. SEE SHT C-507 FOR NOTES REGARDING THE SEQUENCE OF CONSTRUCTION.
4. CONTRACTOR SHALL ABANDON THE EXIST VVWRA INTERCEPTOR SEWER IN PLACE BETWEEN EXIST MH -VV-5-1 AND EXIST MH VV-5-8 AND BETWEEN EXIST MH AV-1 AND EXIST MH AV-3.
5. CONTRACTOR SHALL REMOVE THE MANHOLE COVER, GRADE RINGS, CONE AND SECTION TO A MINIMUM DEPTH OF 4-FEET BELOW GRADE OF THE FOLLOWING MANHOLES. REMOVED PORTIONS SHALL BECOME THE PROPERTY OF THE CONTRACTOR AND LEGALLY DISPOSED IN A MANNER ACCEPTABLE TO ALL JURISDICTIONAL AGENCIES. CORE DRILL TWO 4-INCH DIAMETER HOLES THROUGH MANHOLE BASE, AND FILL THE MANHOLES WITH FLOWABLE FILL: EXIST MH VV-4-26, EXIST MH VV-5-1 EXIST MH VV-5-2, EXIST MH VV-5-7, EXIST MH VV-5-8, AND EXIST MH AV-3. SEE THE EXISTING DRAWINGS IN THE APPENDIX OF THE SPECIFICATIONS FOR DETAILS OF EXIST MANHOLES: VICTOR VALLEY INTERCEPTOR SHT G-2, DTL A AND DTL B.

EXIST EMERGENCY BYPASS REMOVAL NOTES:

6. CONTRACTOR SHALL REMOVE THE EXIST EMERGENCY BYPASS SYSTEMS LOCATED NEAR EXIST MH AV-4 AND EXIST MH VV-5-8. CONTRACTOR SHALL REMOVE THE EXIST EMERGENCY BYPASS PIPE (ABOVE GROUND) IN ITS ENTIRETY, INCLUDING THE EXIST PIPE BRIDGE. CONTRACTOR SHALL COORDINATE ALL REMOVAL ACTIVITIES WITH VVWRA. SEE THE PROJECT SPECIFICATIONS.
7. CONTRACTOR SHALL DISPOSE OF THE SECTIONED HDPE EMERGENCY BYPASS PIPE, THE TWO (2) STORAGE SHEDS AND ASSOCIATED EQUIPMENT AND TRANSPORT TO VVWRA'S WASTEWATER TREATMENT PLANT, LOCATED AT 20111 SHAY ROAD, VICTORVILLE, CA 92394. CONTRACTOR SHALL CLEAN THE EXIST EMERGENCY BYPASS SYSTEMS AND PIPE (ABOVE GROUND) PRIOR TO DISMANTLING THEM. CONTRACTOR SHALL PREVENT SPILL OF SEWAGE.
8. CONTRACTOR SHALL RETURN THE FOUR (4) GODWIN PUMPS AND THEIR ASSOCIATED EQUIPMENT (I.E. SKIDS, FUEL TANKS, ETC) TO GOODWIN PUMPS 17109 EUREKA ST, VICTORVILLE, CA 92395. CONTRACTOR SHALL COORDINATE WITH VVWRA.
9. SEE SECTION 02278 FOR FULL PIPELINE ABANDONMENT PROCEDURES.

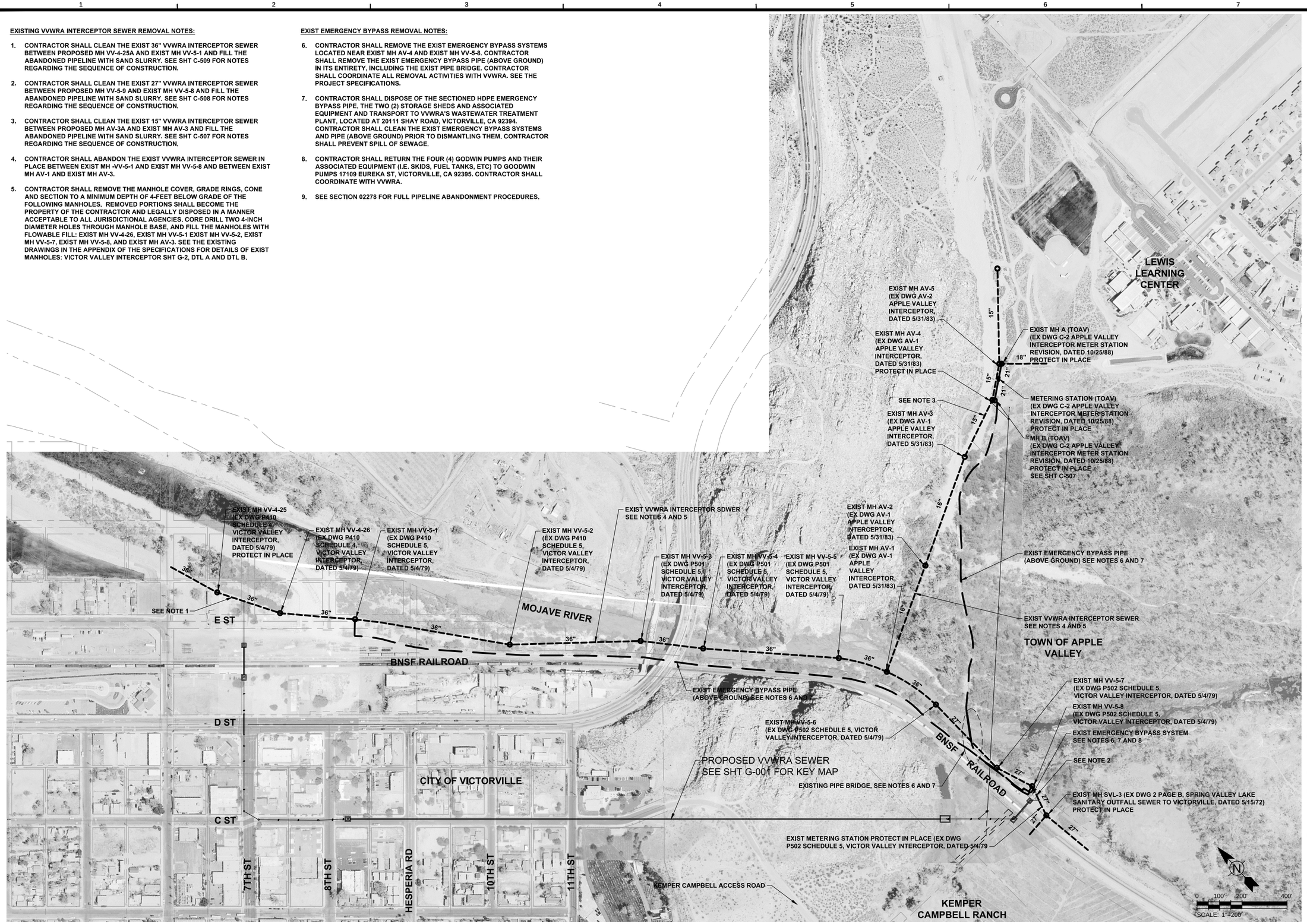

NOT FOR CONSTRUCTION

TETRA TECH
www.tetratech.com
17885 Von Karman Avenue, Suite 500
Irvine, CA 92614-6213
Tel: (949) 809-5000 Fax: (949) 809-5010

VICTOR VALLEY WASTEWATER RECLAMATION AUTHORITY

MARK	DATE	DESCRIPTION	BY

VVWRA
UPPER NARROWS PIPELINE REPLACEMENT

DEMOLITION AND CONNECTION PLAN

Project No.:	135-09065-11001
Designed By:	DLW
Drawn By:	WVPJ
Checked By:	LEB

C-401

Copyright: Tetra Tech

Bar Measures 1 inch

10/30/2012 1:22:22 PM - P:\09065\135-09065-11001\CAD\SHEETFILES\C-401-DEMOLITIONPLAN.DWG - JOHNSON, WILLIE

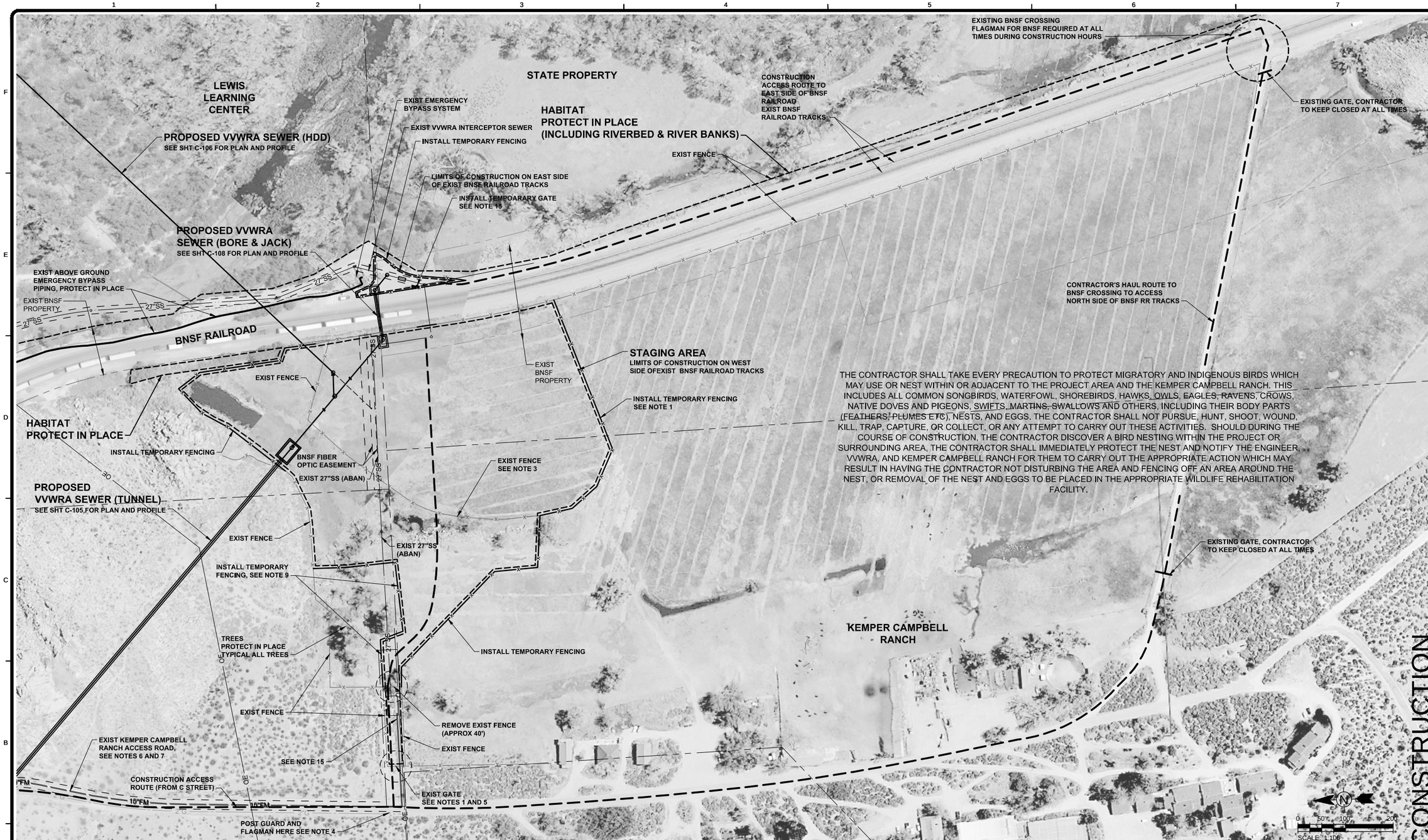

THE CONTRACTOR SHALL TAKE EVERY PRECAUTION TO PROTECT MIGRATORY AND INDIGENOUS BIRDS WHICH MAY USE OR NEST WITHIN OR ADJACENT TO THE PROJECT AREA AND THE KEMPER CAMPBELL RANCH. THIS INCLUDES ALL COMMON SONGBIRDS, WATERFOWL, SHOREBIRDS, HAWKS, OWLS, EAGLES, RAVENS, CROWS, NATIVE DOVES AND PIGEONS, SWIFTS, MARTINS, SWALLOWS AND OTHERS, INCLUDING THEIR BODY PARTS (FEATHERS, PLUMES ETC), NESTS, AND EGGS. THE CONTRACTOR SHALL NOT PURSUE, HUNT, SHOOT, WOUND, KILL, TRAP, CAPTURE, OR COLLECT, OR ANY ATTEMPT TO CARRY OUT THESE ACTIVITIES. SHOULD DURING THE COURSE OF CONSTRUCTION, THE CONTRACTOR DISCOVER A BIRD NESTING WITHIN THE PROJECT OR SURROUNDING AREA, THE CONTRACTOR SHALL IMMEDIATELY PROTECT THE NEST AND NOTIFY THE ENGINEER, VVWRA, AND KEMPER CAMPBELL RANCH FOR THEM TO CARRY OUT THE APPROPRIATE ACTION WHICH MAY RESULT IN HAVING THE CONTRACTOR NOT DISTURBING THE AREA AND FENCING OFF AN AREA AROUND THE NEST, OR REMOVAL OF THE NEST AND EGGS TO BE PLACED IN THE APPROPRIATE WILDLIFE REHABILITATION FACILITY.

NOTES:

1. CONSTRUCTION ACCESS ROAD AT THE KEMPER CAMPBELL RANCH SHALL UTILIZE THE EXISTING GATE AT THE EXISTING PUMP STATION.
2. CONTRACTOR TO PAY VVWRA $2000.00 PER MONTH SHOULD IT BE NECESSARY TO EXTEND CONSTRUCTION HOURS BEYOND 7AM TO 4PM MONDAY THROUGH FRIDAY. VVWRA SHALL COLLECT THIS FEE ON BEHALF OF KEMPER CAMPBELL RANCH AND PASS THIS FEE DIRECTLY ON TO KEMPER CAMPBELL RANCH.
3. CONTRACTOR TO COORDINATE PASTURE USE WITH LEE GRAHAM (760) 245-7695 OR (760) 686-4715 (CELL) IN ALL PHASES OF THE PROJECT.
4. CONTRACTOR SHALL POST A 24-HOUR GUARD AT KEMPER CAMPBELL RANCH DURING ALL PHASES OF CONSTRUCTION. GUARD SHALL ENSURE THAT ONLY TENANTS AND CONSTRUCTION PERSONNEL ARE ALLOWED TO PASS. FURTHERMORE, GUARD SHALL ENSURE THAT CONSTRUCTION PERSONNEL ARE DIRECTED TO THE APPROPRIATE AREA OF CONSTRUCTION.
5. CONTRACTOR SHALL COORDINATE ACCESS THROUGH KEMPER CAMPBELL RANCH'S GATE DURING CONSTRUCTION. CONTRACTOR SHALL PROVIDE TRAFFIC CONTROL, FLAG MEN, UNOBSTRUCTED ACCESS, AS NEEDED TO AVOID CONFLICT BETWEEN TENANTS AND CONSTRUCTION PERSONNEL.
6. WHEN USING KEMPER CAMPBELL RANCH'S ACCESS ROAD FOR CONSTRUCTION ACCESS, CONTRACTOR SHALL PROVIDE TRAFFIC CONTROL PER THE CALIFORNIA MUTCD 2010.
7. CONTRACTOR SHALL PROTECT KEMPER CAMPBELL RANCH'S ACCESS ROADS AND LIVESTOCK IN PLACE FROM DAMAGE IN CASE OF DAMAGE, KEMPER CAMPBELL RANCH'S ROADS SHALL BE RESTORED. ADDITIONALLY, IF LIVESTOCK IS INJURED OR KILLED AS A DIRECT OR INDIRECT RESULT OF THE CONSTRUCTION ACTIVITIES, CONTRACTOR SHALL PAY KEMPER CAMPBELL RANCH ANY AND ALL VET BILLS OR THE REPLACEMENT VALUE OF THAT ANIMAL, RESPECTIVELY.
8. CONTRACTOR SHALL VISIT PRIMARY CONSTRUCTION ACCESS PRIOR TO SUBMITTING A BID TO FAMILIARIZE THEMSELVES WITH ACCESS CONDITIONS, INCLUDING BUT NOT LIMITED TO TURNING RADIUS, GATE WIDTH AND HEIGHT OF TREES TO TRAVERSE UNDER.
9. CONTRACTOR TO INSTALL AND MAINTAIN TEMPORARY FENCING AROUND CONSTRUCTION ACTIVITIES SUFFICIENT TO KEEP CONSTRUCTION ACTIVITIES IN AND LIVESTOCK OUT.
10. LEE GRAHAM SHALL TAKE ALL CLEAN (NON-CONTAMINATED) ROCK, SOILS, & BENTONITE TO THE LCER. ACCESS TO THE LCER SHALL BE VIA C STREET AND NOT THROUGH KEMPER CAMPBELL RANCH. CONTRACTOR TO COORDINATE WITH LEE GRAHAM AND HAUL MATERIALS TO THE LCER.
11. AS A SUBCONTRACTOR TO THE CONTRACTOR, LEE GRAHAM SHALL PERFORM ALL CLEARING & GRUBBING ACTIVITIES PRIOR TO COMMENCEMENT OF CONSTRUCTION. CONTRACTOR SHALL PROCURE BID FROM LEE GRAHAM TO COMPLETE THIS WORK AND INCLUDE IN BID.
12. AS A SUBCONTRACTOR TO THE CONTRACTOR, LEE GRAHAM SHALL PERFORM SITE RESTORATION INCLUDING RESTORING THE PASTURE TOPSOIL AND FENCING AT THE COMPLETION OF CONSTRUCTION ACTIVITIES. CONTRACTOR SHALL PROCURE BID FROM LEE GRAHAM TO COMPLETE THIS WORK AND INCLUDE IN BID.
13. WATER USED FOR COOLING THE HDPE CARRIER PIPE DURING GROUTING OPERATIONS OF THE ANNULAR SPACE BETWEEN THE CARRIER PIPE AND THE TUNNEL CASING SHALL BE PIPED BY THE CONTRACTOR TO THE SOUTH END OF KEMPER CAMPBELL RANCH (APPROX 2500 LF. SEE SECTION 02623 OF THE SPECIFICATIONS. CONTRACTOR TO COORDINATE WITH LEE GRAHAM.
14. CONTRACTOR SHALL TAKE REASONABLE CARE TO PROTECT WILDLIFE DURING CONSTRUCTION.
15. CONTRACTOR SHALL MAINTAIN VVWRA'S ACCESS TO THE EXIST EMERGENCY BYPASS SYSTEM.
16. CONTRACTOR SHALL REMOVE THE EXISTING SLAB ON GRADE AND REMOVE THE EXISTING UPPER FOUR (4) FEET OF PUMP CANS. CONTRACTOR SHALL FILL THE REMAINS OF PUMP CANS WITH FLOWABLE FILL AND BACKFILL AREA WITH 90% COMPACTED SOILS. CONTRACTOR SHALL DISPOSE OF ALL REMOVED MATERIALS. SEE SPEC SECTION 02278.
17. CONTRACTOR SHALL DIRECT ALL LIGHTING AWAY FROM KCR RESIDENTS FOR ALL NIGHT WORK.

NOT FOR CONSTRUCTION

Bar Measures 1 inch

TETRA TECH
www.tetratech.com
17885 Von Karman Avenue, Suite 500
Irvine, CA 92614-6213
Tel: (949) 809-5000 Fax: (949) 809-5010

VICTOR VALLEY WASTEWATER RECLAMATION AUTHORITY

MARK	DATE	DESCRIPTION	BY

VVWRA
UPPER NARROWS PIPELINE REPLACEMENT
KEMPER CAMPBELL RANCH STAGING AND ACCESS

Project No.:	135-09065-11001
Designed By:	DLW
Drawn By:	WVPJ
Checked By:	LEB

C-402

Copyright: Tetra Tech

10/30/2012 1:22:36 PM - P:\09065\135-09065-11001\CAD\SHEETFILES\C-402-KEMPERCAMPBELLSITE.DWG - JOHNSON, WILLIE

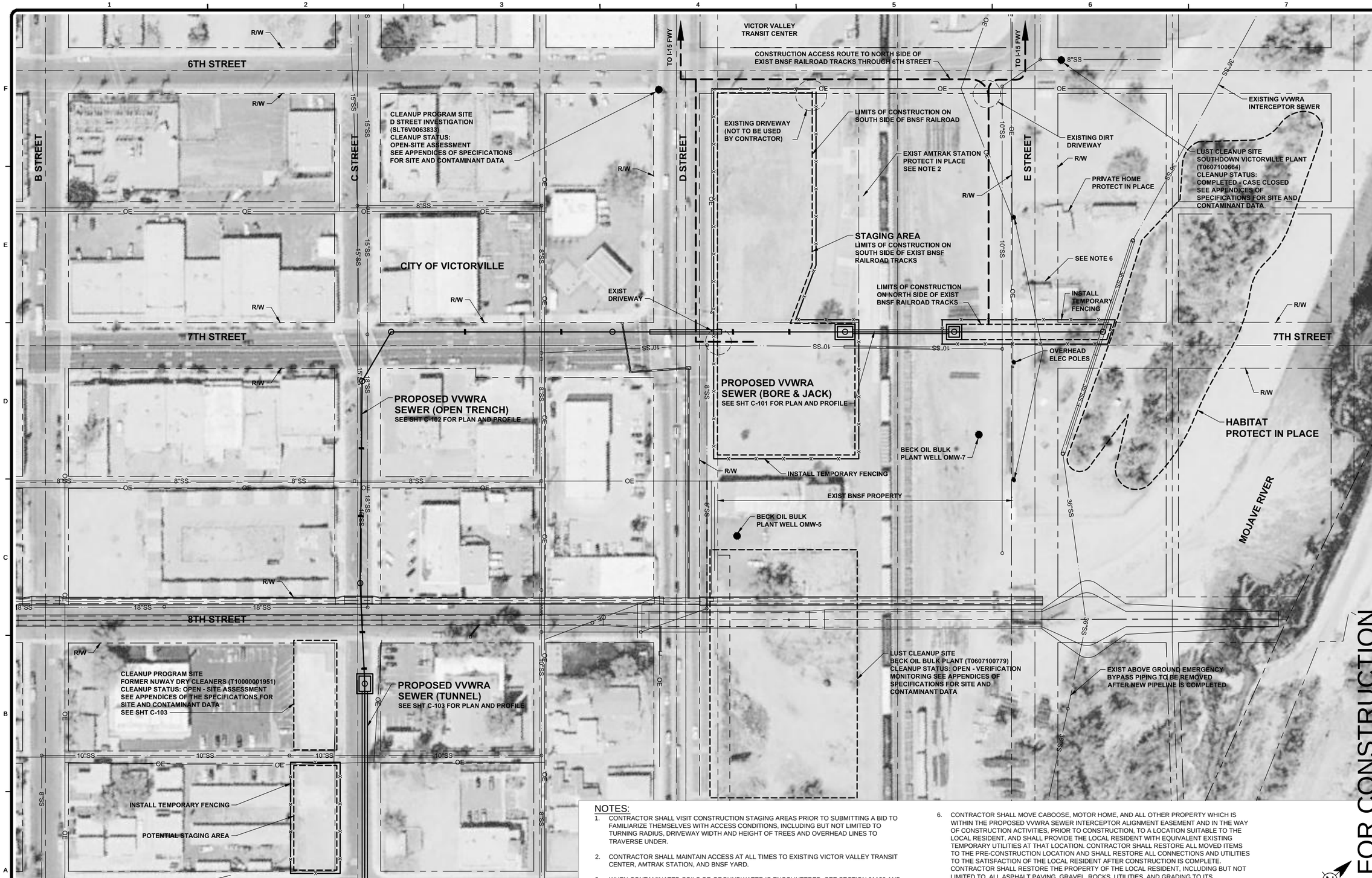

NOTES:

1. CONTRACTOR SHALL VISIT CONSTRUCTION STAGING AREAS PRIOR TO SUBMITTING A BID TO FAMILIARIZE THEMSELVES WITH ACCESS CONDITIONS, INCLUDING BUT NOT LIMITED TO TURNING RADIUS, DRIVEWAY WIDTH AND HEIGHT OF TREES AND OVERHEAD LINES TO TRAVERSE UNDER.
2. CONTRACTOR SHALL MAINTAIN ACCESS AT ALL TIMES TO EXISTING VICTOR VALLEY TRANSIT CENTER, AMTRAK STATION, AND BNSF YARD.
3. WHEN CONTAMINATED SOILS OR GROUNDWATER IS ENCOUNTERED, SEE SECTION 01130 AND 01140 OF THE SPECIFICATIONS.
4. CONTRACTOR SHALL FOLLOW ALL REQUIREMENTS OF BNSF (SEE SPECIFICATIONS)
5. CONTRACTOR SHALL POST A 24-HOUR ARMED GUARD AT STAGING AREA DURING ALL PHASES OF CONSTRUCTION. GUARD SHALL ENSURE THAT ONLY CONSTRUCTION PERSONNEL ARE ALLOWED ACCESS. FOR SITE SECURITY, SEE SPECIFICATIONS.
6. CONTRACTOR SHALL MOVE CABOOSE, MOTOR HOME, AND ALL OTHER PROPERTY WHICH IS WITHIN THE PROPOSED VVWRA SEWER INTERCEPTOR ALIGNMENT EASEMENT AND IN THE WAY OF CONSTRUCTION ACTIVITIES, PRIOR TO CONSTRUCTION, TO A LOCATION SUITABLE TO THE LOCAL RESIDENT, AND SHALL PROVIDE THE LOCAL RESIDENT WITH EQUIVALENT EXISTING TEMPORARY UTILITIES AT THAT LOCATION. CONTRACTOR SHALL RESTORE ALL MOVED ITEMS TO THE PRE-CONSTRUCTION LOCATION AND SHALL RESTORE ALL CONNECTIONS AND UTILITIES TO THE SATISFACTION OF THE LOCAL RESIDENT AFTER CONSTRUCTION IS COMPLETE. CONTRACTOR SHALL RESTORE THE PROPERTY OF THE LOCAL RESIDENT, INCLUDING BUT NOT LIMITED TO, ALL ASPHALT PAVING, GRAVEL, ROCKS, UTILITIES, AND GRADING TO ITS PRE-CONSTRUCTION CONDITION TO THE SATISFACTION OF THE LOCAL RESIDENT. FOR EACH TREE ON THE PROPERTY OF THE LOCAL RESIDENT THAT THE CONTRACTOR MUST REMOVE FOR CONSTRUCTION OF THE PROPOSED VVWRA SEWER INTERCEPTOR, CONTRACTOR SHALL RE-PLANT TWO TREES OF THE SAME SPECIES OF MINIMUM 36-INCH BOX, IN THE PRE-CONSRUCTION LOCATION OF IN A LOCATION SUITABLE TO THE LOCAL RESIDENT, AFTER CONSTRUCTION IS COMPLETE.
7. FOR UTILITIES ALONG C STREET AND 7TH STREET, SEE PLAN AND PROFILE SHEETS.

N

0 30' 60' 120'
SCALE: 1" = 100'

NOT FOR CONSTRUCTION

TETRA TECH
www.tetratech.com
17885 Von Karman Avenue, Suite 500
Irvine, CA 92614-6213
Tel: (949) 809-5000 Fax: (949) 809-5010

VICTOR VALLEY WASTEWATER RECLAMATION AUTHORITY

MARK	DATE	DESCRIPTION	BY

VVWRA
UPPER NARROWS PIPELINE REPLACEMENT

C STREET AND 7TH STREET STAGING AND ACCESS

Project No.:	135-09065-11001
Designed By:	DLW
Drawn By:	WVPJ
Checked By:	LEB

C-403

Bar Measures 1 inch

Copyright: Tetra Tech

10/30/2012 1:22:41 PM - P:\09065\135-09065-110011\CAD\SHEETFILES\C-403-7THSTREETSITEPLAN.DWG - JOHNSON, WILLIE

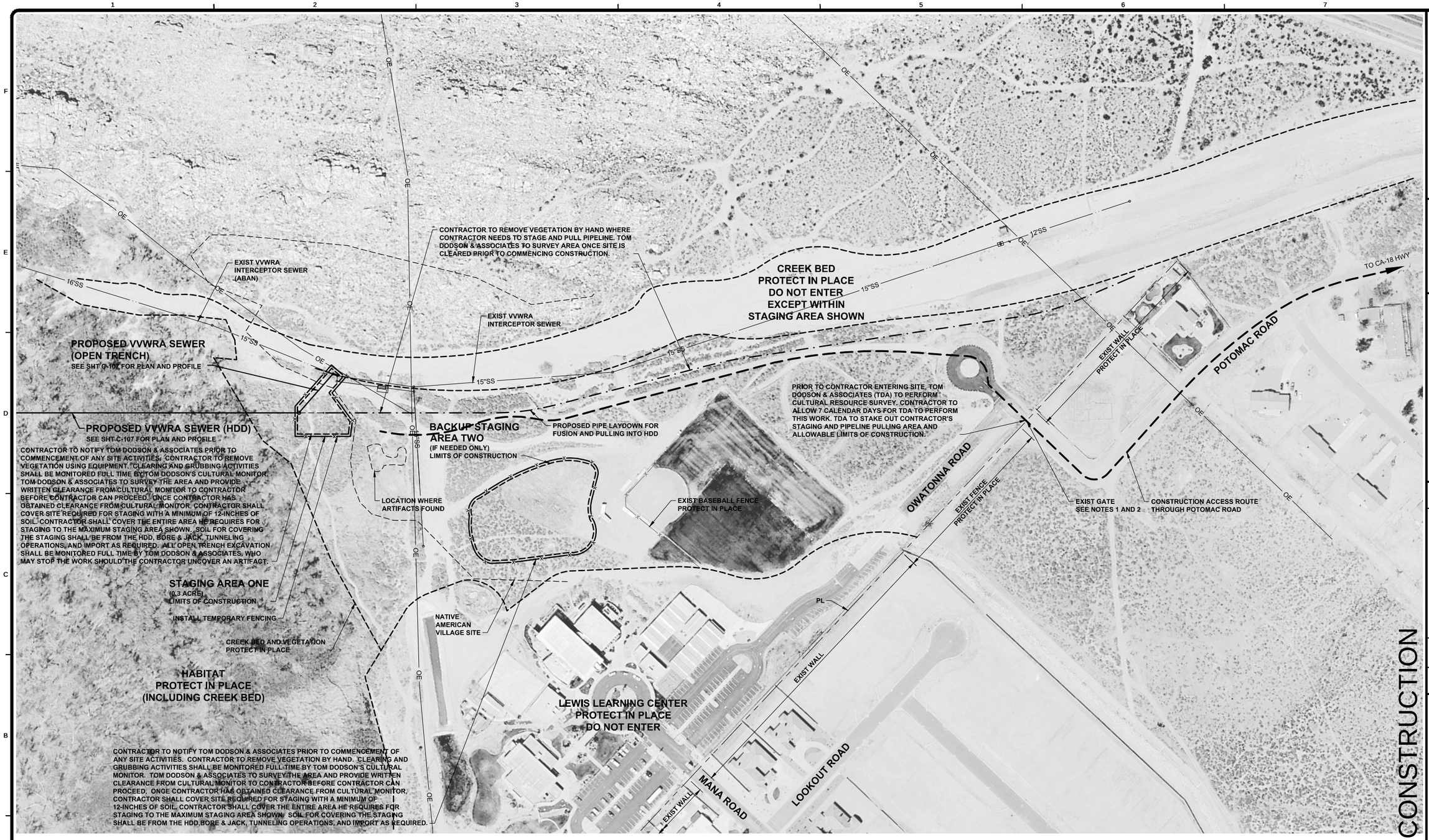

NOTES:

1. CONSTRUCTION ACCESS ROAD AT LEWIS LEARNING CENTER SHALL UTILIZE THE ROUND-ABOUT OFF OWATONNA ROAD AND POTOMAC ROAD.
2. CONTRACTOR SHALL COORDINATE ACCESS WITHIN LEWIS LEARNING CENTER DURING CONSTRUCTION. CONTRACTOR SHALL PROVIDE TRAFFIC CONTROL, FLAG MEN, UNOBSTRUCTED ACCESS, AS NEEDED TO AVOID CONFLICT.
3. CONTRACTOR SHALL VISIT CONSTRUCTION STAGING AREA AND ACCESS ROUTE PRIOR TO SUBMITTING A BID TO FAMILIARIZE THEMSELVES WITH ACCESS CONDITIONS, INCLUDING BUT NOT LIMITED TO TURNING RADIUS, GATE WIDTH AND HEIGHT OF TREES AND OVERHEAD LINES TO TRAVERSE UNDER.
4. CONTRACTOR TO INSTALL TEMPORARY FENCING AROUND CONSTRUCTION ACTIVITIES SUFFICIENT TO KEEP CONSTRUCTION ACTIVITIES IN AND NON-CONSTRUCTION PERSONNEL OUT.
5. CONTRACTOR SHALL COMPLY WITH ALL SAFETY PROCEDURES OF LEWIS LEARNING CENTER.
6. ON LEWIS LEARNING CENTER PROPERTY, MAXIMUM SPEED LIMIT IS 10 MPH.
7. ALL CONSTRUCTION ACCESS ROADS ON LEWIS LEARNING CENTER PROPERTY SHALL HAVE A GRAVEL BED PLACED BY THE CONTRACTOR.
8. CONTRACTOR SHALL NO RESTRICT ACCESS AND USE OF LEWIS LEARNING CENTER.
9. THE CONTRACTOR'S ATTENTION IS DRAWN TO C-404, C-107 AND C-507 AND THE ENVIRONMENTAL DOCUMENTS CONTAINED HEREIN. CONTRACTOR TO NOTE THAT THE EXCAVATION OF THE OPEN TRENCH AS SHOWN ON C-404, C-107 AND C-507 BETWEEN MANHOLES MH AVS-2 AND MH AV-3A AND MH-AV4 INCLUDING THE CONSTRUCTION OF MH AV-3A SHALL BE SCHEDULED TO OCCUR IMMEDIATELY WHEN THE CONTRACTOR MOBILIZES TO THE FIELD. THE CONNECTION TO AND THE CONSTRUCTION OF MANHOLE MH AVS-2 SHOULD WAIT UNTIL AFTER THE CONSTRUCTION OF THE HDD PORTION OF THE PIPELINE SINCE THE CONSTRUCTION OF THE HDD PIPELINE WOULD INTERFERE WITH THE MANHOLE AT THAT LOCATION. HOWEVER, THE EXCAVATION OF MANHOLE MH AVS-2 WITHIN THE LIMITS NEEDED FOR CONSTRUCTION SHOULD BE DONE IMMEDIATELY TO VERIFY THAT NO NATIVE AMERICAN REMAINS EXIST WITHIN THE EXCAVATED AREA, AND THEN BACKFILLED TO FACILITATE THE CONSTRUCTION OF THE HDD. THERE IS A HIGH PROBABILITY OF DISCOVERY OF NATIVE AMERICAN REMAINS OR ARTIFACTS WITHIN THIS PORTION OF THE PROJECT THAT COULD POTENTIALLY RESULT IN SUBSTANTIAL DELAYS. DEPENDING ON IF REMAINS OR ARTIFACTS ARE DISCOVERED, THE MONITORS WILL EITHER REMOVE THE ARTIFACTS, OR A CHANGE ORDER MAY ULTIMATELY BE ISSUED TO THE CONTRACTOR TO MOVE THE TRENCH TO AN ADJACENT LOCATION. EITHER SITUATION MAY CAUSE A DELAY TO THIS PORTION OF THE PROJECT. TO MITIGATE THESE DELAYS IN THE OVERALL PROJECT TIMELINE AND CRITICAL PATH OF THE PROJECT, THE PORTION OF THE WORK INVOLVING EXCAVATION MUST BE SCHEDULED IMMEDIATELY.

N

0 50' 100' 200'
SCALE: 1" = 100'

NOT FOR CONSTRUCTION

Bar Measures 1 inch

TETRA TECH
www.tetratech.com
17885 Von Karman Avenue, Suite 500
Irvine, CA 92614-6213
Tel: (949) 809-5000 Fax: (949) 809-5010

VICTOR VALLEY WASTEWATER RECLAMATION AUTHORITY

MARK	DATE	DESCRIPTION	BY

VVWRA
UPPER NARROWS PIPELINE REPLACEMENT
LEWIS LEARNING CENTER STAGING AND ACCESS

Project No.:	135-09065-11001
Designed By:	DLW
Drawn By:	WVPJ
Checked By:	LEB

C-404

Copyright: Tetra Tech

10/30/2012 1:22:51 PM - P:\09065\135-09065-11001\CAD\SHEETFILES\C-404-ENDHDDSITEPLAN.DWG - JOHNSON, WILLIE

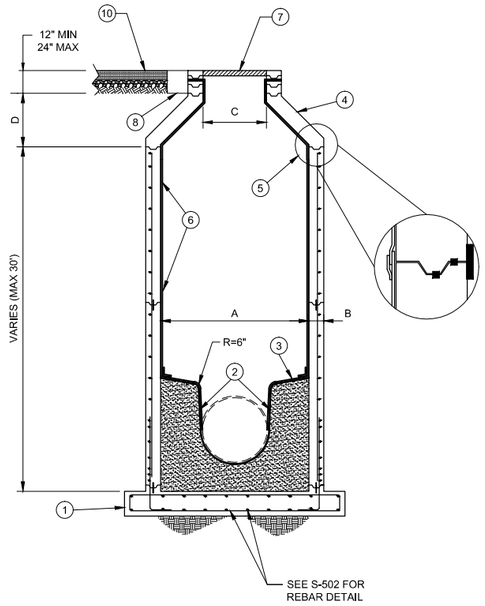

1. MANHOLES SHALL HAVE 4000 # (CLASS "A"), CONCRETE BASES AND BE IN ACCORDANCE WITH THE STRUCTURAL DRAWINGS. SIDES OF BASE SHALL BE FORMED BY EITHER WOOD FORMS OR SANDBAGS. ALL CONCRETE AND MORTAR SHALL USE CLASS II/V CEMENT.
2. THE COMPLETE CONCRETE CHANNEL SHALL BE CONSTRUCTED WITH FORMS AND PVC LINED.
3. MANHOLE SHELVES SHALL BE SLOPED 1/4" PER FOOT TO CHANNEL AND COVERED WITH PVC LINER WITH LOCKING EXTENSIONS. THE PVC LINER SHALL BE APPLIED BY MEANS OF AN EPOXY-TYPE MASTIC. INSTALL NON-SKID SURFACE ON PVC LINER OVER THE COMPLETE MANHOLE SHELF ON BOTH SIDES OF MAIN CHANNEL PER THE SPECIFICATION OR APPROVED LINER MANUFACTURER RECOMMENDATIONS. A PVC ANGLE STRIP SHALL BE USED FOR THE TRANSITION BETWEEN HORIZONTAL SHELF AND VERTICAL CHANNEL.
4. MANHOLE SECTIONS AND GRADE RINGS SHALL BE REINFORCED, MADE FROM CLASS II/V CEMENT AND CAST WITH PVC LINER PLATE ON INSIDE. ECCENTRIC CONE SHALL BE SET WITH STRAIGHT SIDE ON DOWNSTREAM SIDE OF MANHOLE. ECCENTRIC REINFORCED CONCRETE FLAT TOPS MAY BE USED WHEN APPROVED BY THE ENGINEER.
5. THE KEYLOCK JOINT BETWEEN MANHOLE SECTIONS SHALL BE SEALED WITH TWO 1½-INCH SQUARE BEADS OF RAM-NEK BY HENRY COMPANY, KENT-SEAL BY HAMILTON KENT, OR APPROVED EQUAL. THE MASTIC BEADS SHALL BE PLACED ON THE OUTSIDE SHOULDER OF AND IN THE GROOVE. APPLY A 6" MINIMUM WIDTH OUTSIDE JOINT WRAP, RUB'R-NEK BY HENRY COMPANY, SEAL WRAP BY SEALING SYSTEMS, INC., OR EQUAL, TO ALL SHAFT JOINTS. GRADE RING JOINTS SHALL BE MORTAR.
6. INSTALLATION OF PVC LINER PLATE SHALL CONFORM TO THE REQUIREMENTS OF SECTION 08620 OF THE SPECIFICATIONS. USE WELDING STRIPS AT PVC JOINTS. A PREFORMED CORNER WELDING STRIP AT THE BASE JOINT AND A CONTINUOUS PREFORMED CORNER AT THE TOP GRADE RING AND FRAME JOINT TO THE SECOND GRADE RING.
7. INSTALL FRAME AND COVER PER DETAIL 2 ON SHEET C-501. ADJUSTMENT SHALL OCCUR USING MORTAR BETWEEN FIRST AND SECOND GRADE RINGS. THE FRAME SHALL COMPLETELY BEAR ON PVC. CAULK THE JOINT BETWEEN THE FRAME AND THE PREFORMED PVC CORNER AT THE TOP GRADE RING WITH SIKAFLEX 1A OR EQUAL.
8. PLACE CONCRETE COLLAR, AS SHOWN, AFTER PLACEMENT OF ASPHALT. SEE DETAIL 2 ON SHEET C-501.
9. ALL MANHOLES SHALL HAVE BOLTED COVERS.
10. IN PAVED AREAS, PAVEMENT AND BASE COURSE SHALL BE REPLACED PER DTL 3 ON SHT C-503.
11. VACUUM TESTING SHALL BE PERFORMED PER ASTM C-1244 UNLESS NOTED OTHERWISE.
12. MANHOLES SHALL BE BACKFILLED WITH 1 1/2 SACK SAND/CEMENT SLURRY TO STREET ZONE.

NOTES:

1. MANHOLE BEDDING SHALL BE THE SAME THICKNESS AND CLASS AS THE PIPE BEDDING.
2. FOR TYPICAL MANHOLE STRUCTURAL PLAN AND SECTION, SEE SHT S-502.

PIPE SIZE	A	B	C	D
15"	48"	8.5"	24"	24"
16" - 26"	72"	8.5"	36"	48"
48"	84"	8.5"	36"	48"
*(MH UNI-9)	120"	8.5"	36"	48"

1 PVC-LINED MANHOLE FOR SEWERS

SCALE: NTS

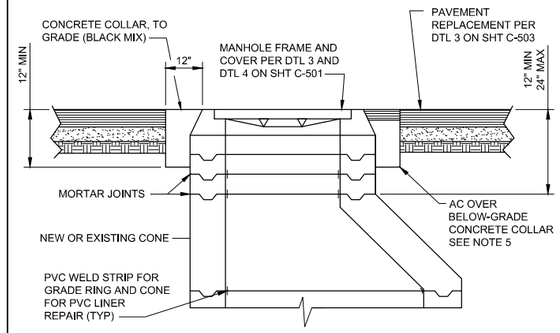

CROSS SECTION

NOTES:

1. NEATLY REMOVE PAVEMENT AND AGGREGATE BASE AS NECESSARY TO MAKE ADJUSTMENT.
2. MAKE FINAL ADJUSTMENTS AT THE MORTAR JOINT BETWEEN THE FIRST AND SECOND GRADE RINGS. SET FLUSH WITH PAVEMENT TO ONE-EIGHT INCH HIGH.
3. AT EXISTING MANHOLES, ADD OR REMOVE GRADE RINGS. ADJUST HEIGHT AT MANHOLE RISER SECTIONS IF THE TOTAL HEIGHT OF GRADE RINGS WOULD EXCEED 24 INCHES.
4. BACKFILL FLUSH WITH SURFACE OR BELOW PAVEMENT SURFACE AS REQUIRED BY CITY OF VICTORVILLE WITH 3250 PSI (CLASS B) QUICK-SETTING CONCRETE TO FORM COLLAR. EXPOSED CONCRETE SHALL BE BLACK IN COLOR.
5. FILL AREA ABOVE BELOW-GRADE COLLAR WITH AC WEARING SURFACE TO MATCH ADJACENT AC.
6. SEAL MANHOLE RIM AND HOLES WITH DUCT-SEAL MASTIC. RE-SEAL ALL EXISTING MANHOLE COVERS.
7. MH AVS-2 AND MH AV-3A SHALL BE CONSTRUCTED WITH RIM 18 INCHES ABOVE EXISTING NATURAL SURFACE OR FINISHED GRADE.

2 MANHOLE ADJUSTMENT TO GRADE

SCALE: NTS

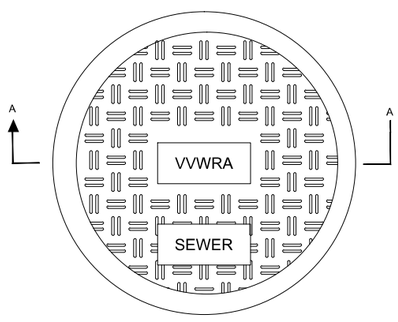

PLAN

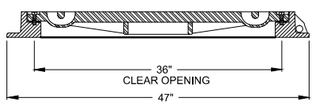

SECTION A-A

NOTES:
1. SEE SECTION 02727 OF THE SPECIFICATIONS.

3 36" COMPOSITE MANHOLE ACCESS SYSTEM

SCALE: NTS

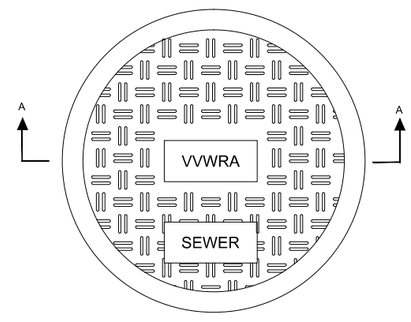

PLAN

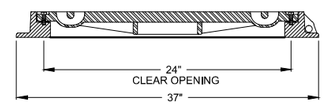

SECTION A-A

NOTES:
1. SEE SECTION 02727 OF THE SPECIFICATIONS.

4 24" COMPOSITE MANHOLE ACCESS SYSTEM

SCALE: NTS

NOT FOR CONSTRUCTION

TETRA TECH
www.tetratech.com
17885 Von Karman Avenue, Suite 500
Irvine, CA 92614-6213
Tel: (949) 809-5000 Fax: (949) 809-5010

VICTOR VALLEY WASTEWATER RECLAMATION AUTHORITY

MARK	DATE	DESCRIPTION	BY

VVWRA
UPPER NARROWS PIPELINE REPLACEMENT
CIVIL DETAILS 1

Project No.:	135-09065-11001
Designed By:	MBJ
Drawn By:	LEG
Checked By:	LEB

C-501

Copyright: Tetra Tech

Bar Measures 1 inch

10/30/2012 1:22:56 PM - P:\09065\135-09065-11001\CAD\SHEETFILES\C-501-CIVILDETAILS.DWG - JOHNSON, WILLIE

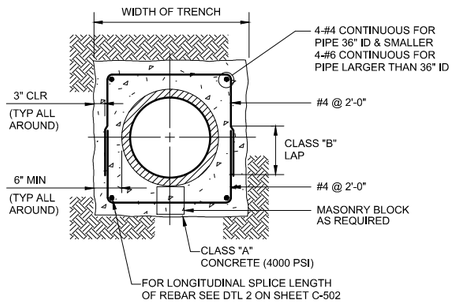

1 CONCRETE ENCASEMENT OF PIPE

SCALE: NTS

REINFORCING LAP SPLICE SCHEDULE				
BAR	f'c=2500	f'c=3250	f'c=4000	f'c=5000
	L (inches)	L (inches)	L (inches)	L (inches)
3	24	21	19	17
4	32	28	25	23
5	39	35	31	28
6	47	42	37	34
7	69	60	54	49
8	78	69	62	56

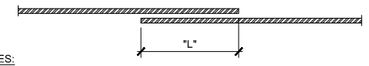

NOTES:

1. LAPS SHOWN IN THIS TABLE ARE CLASS B, CATEGORY 3 TYPE SPLICES. LAP LENGTH IS BASED UPON SMALLER OF TWO BARS BEING SPLICED WHEN NOT THE SAME SIZE.

2. INCREASE LAP LENGTHS BY A FACTOR OF 1.3 FOR HORIZONTAL REINFORCEMENT SO PLACED THAT MORE THAN 12 INCHES OF CONCRETE IS CAST IN THE MEMBER BELOW THIS REINFORCEMENT.

2 TYPICAL BAR BENDS

SCALE: NTS

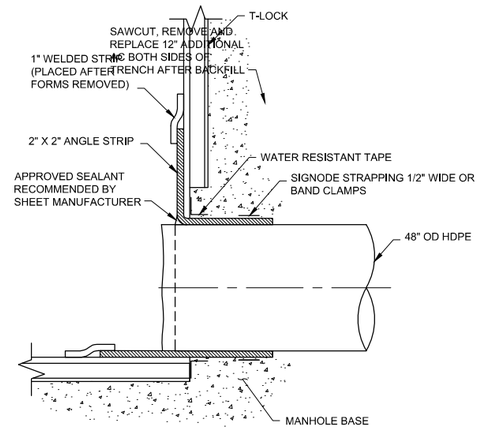

3 LINING CONNECTION DETAIL

SCALE: NTS

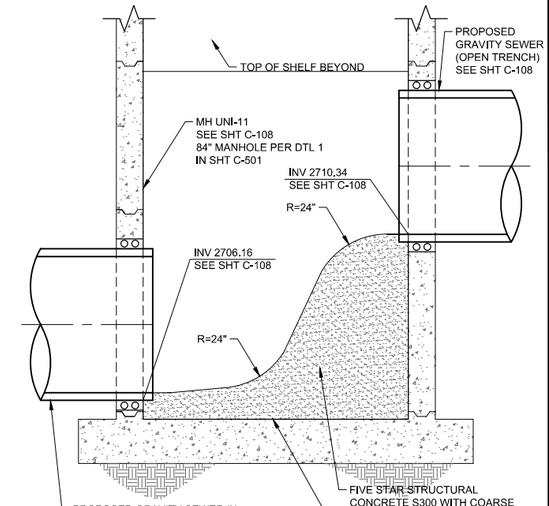

NOTE:

CONTRACTOR SHALL CONSTRUCT CHANNEL TO MAINTAIN FLOW WITH SMOOTH TRANSITIONAL CURVES FROM INVERT TO INVERT

4 MH UNI-11 AT STA 302+64.83 MANHOLE CHANNEL SECTION

SCALE: 1/2" = 1'-0"

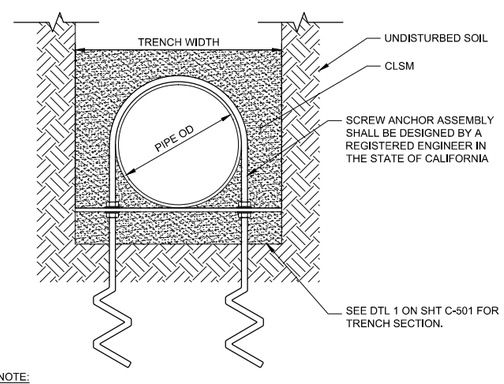

NOTE:

1. CONTRACTOR SHALL DESIGN AND SUBMIT FOR APPROVAL PIPE ANCHORAGE TO PREVENT FLOATATION OF THE PIPE DURING PLACEMENT OF CLSM IN THE TRENCH. SEE DTL 1 ON SHT C-503). ANCHORAGE DESIGN SHALL INCORPORATE FILLING THE PIPE WITH WATER DURING CLSM PLACEMENT (AND/OR PLACING CLSM IN LIFTS) TO MINIMIZE BUOYANT FORCES.

2. NO SLOPE DEVIATION (INVERT) OF PIPE FROM PLANS AFTER CLSM PLACEMENT SHALL BE PERMITTED.

5 PIPE SCREW ANCHOR

SCALE: NTS

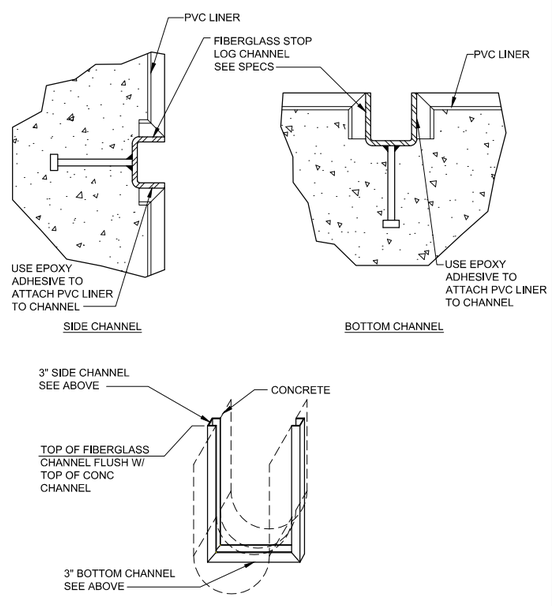

6 STOP LOG CHANNEL

SCALE: NTS

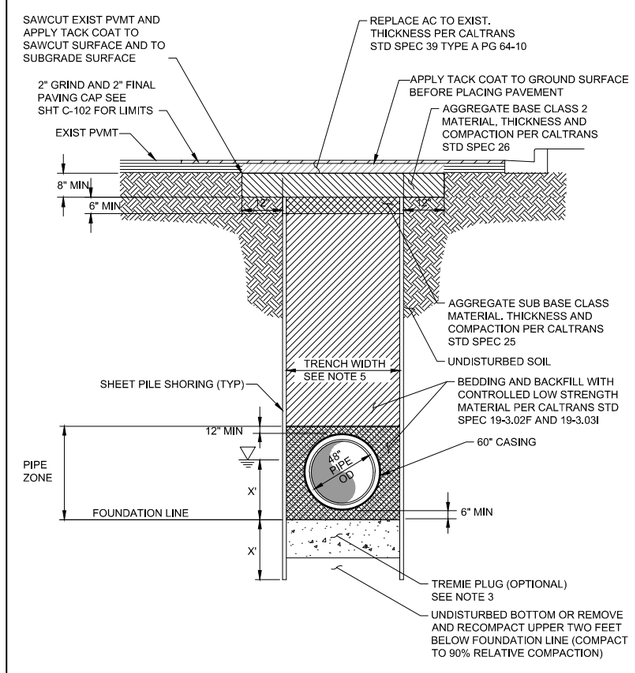

NOTES:

1. PER CALTRANS UG PROVISIONS UG-16, AFTER THE PIPE IS PLACED IN THE OPEN TRENCH SECTION, PIPE BEDDING AND BACKFILL SHALL BE IN ACCORDANCE WITH CALTRANS STANDARD SPECIFICATIONS 19-3.02F AND 19-3.03I. TEMPORARY REPAIRS SHALL BE MADE TO THE SURFACING AND THAT PORTION OPENED TO TRAFFIC BEFORE THE PAVEMENT IS CUT FOR THE NEXT SECTION. IF, AT THE END OF THE WORKING DAY, BACKFILLING OPERATIONS HAVE NOT BEEN PROPERLY COMPLETED, STEEL PLATE BRIDGING SHALL BE REQUIRED TO MAKE THE ENTIRE HIGHWAY FACILITY AVAILABLE TO THE TRAVELING PUBLIC IN ACCORDANCE WITH THE STEEL PLATE BRIDGING SPECIAL PROVISIONS (TR-0157)

2. DISTANCE X (FT) IS DISTANCE FROM BOTTOM OF PIPE ZONE TO GROUND WATER ELEVATION. SHEET PILE SHOULD EXTEND FROM THE BOTTOM OF THE PIPE ZONE TO THE BOTTOM OF THE SHEET PILE THE SAME DISTANCE X (FT).

3. WHEN PIPE INSTALLATION ENCOUNTERS GROUNDWATER, CONTRACTOR MAY DEWATER OR INSTALL A TREMIE PLUG. CONTRACTOR IS RESPONSIBLE TO DESIGN AND SUBMIT A DEWATERING METHOD FOR APPROVAL BY THE ENGINEER PRIOR TO CONTRACTOR'S IMPLEMENTATION OF DEWATERING METHOD IN THE FIELD. SEE SECTION 01130 OF THE SPECIFICATIONS.

4. WHEN CONTAMINATED SOILS OR GROUNDWATER IS ENCOUNTERED, SEE SECTION 01130 AND 01140 OF THE SPECIFICATIONS

5. TRENCH WIDTH AT THE UPPER LIMIT OF THE PIPE ZONE SHALL BE WITHIN THE LIMITS SPECIFIED IN CALTRANS STANDARD SPECIFICATION 19-3.03I PLUS SHORING WIDTH.

6. PERMANENT PAVEMENT REPAIR SHALL BE MADE WITHIN 30 DAYS OF COMPLETION OF BACKFILL.

7. TEMPORARY REPAIRS TO PAVEMENTS SHALL BE MAINTAINED FREE OF HUMPS OR DEPRESSIONS FOR A SMOOTH RIDING PLANE.

8. PER CALTRANS UG PROVISION UG-17, PCC PAVEMENT TO BE REMOVED SHALL BE SAW CUT AT A MINIMUM DEPTH OF 4" TO PROVIDE A NEAT AND STRAIGHT PAVEMENT BREAK ALONG BOTH SIDES OF THE TRENCH. AC PAVEMENT SHALL BE SAW CUT TO THE FULL DEPTH. WHERE THE EDGE OF THE TRENCH IS WITHIN 2' OF EXISTING CURB AND GUTTER OR PAVEMENT EDGE, THE ASPHALT CONCRETE PAVEMENT BETWEEN THE TRENCHA ND THE CURB OR PAVEMENT EDGE SHALL BE REMOVED.

9. PER CALTRANS UG PROVISION UG-19, SIDES OF OPEN CUT TRENCHES IN PAVED AREAS SHALL BE KEPT AS NEARLY VERTICAL AS POSSIBLE. TRENCHES SHALL NOT BE MORE THAN 2' WIDER THAN THE OUTSIDE DIAMETER OF THE PIPE TO BE LAID THEREIN PLUS THE NECESSARY WIDTH TO ACCOMMODATE SHORING.

7 PIPE INSTALLATION IN GROUNDWATER WITHIN CALTRANS ROW

SCALE: NTS

CALTRANS PERMIT NO. 08-12-N-UT-0064

NOT FOR CONSTRUCTION

TETRA TECH
www.tetratech.com
17885 Von Karman Avenue, Suite 500
Irvine, CA 92614-6213
Tel: (949) 809-5000 Fax: (949) 809-5010

VICTOR VALLEY WASTEWATER RECLAMATION AUTHORITY

MARK	DATE	DESCRIPTION	BY

VVWRA
UPPER NARROWS PIPELINE REPLACEMENT
CIVIL DETAILS 2

Project No.:	135-09065-11001
Designed By:	MBJ
Drawn By:	LEG
Checked By:	LEB

C-502

Copyright: Tetra Tech

Bar Measures 1 inch

10/30/2012 1:23:02 PM - P:\09065\135-09065-11001\CAD\SHEETFILES\C-502-CIVILDETAILS.DWG - JOHNSON, WILLIE

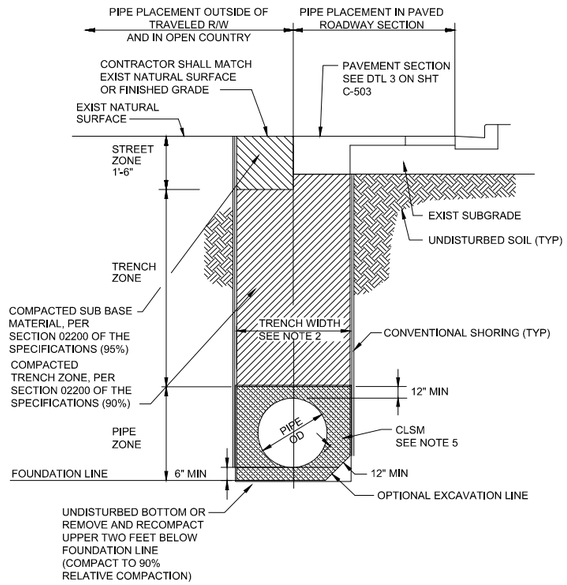

NOTES:

1. BEDDING AND BACKFILL MATERIALS AND COMPACTION PER SECTION 02200 OF THE SPECIFICATIONS.
2. TRENCH WIDTH AT THE UPPER LIMIT OF THE PIPE ZONE SHALL BE WITHIN THE FOLLOWING LIMIT FOR TYPICAL NORMAL BEDDING.
   (A) MAXIMUM TRENCH WIDTH SHALL BE PIPE OD PLUS 12" MAX EACH SIDE OF PIPE PLUS SHORING WIDTH
   (B) MINIMUM TRENCH WIDTH SHALL BE BELL PLUS 8" MIN EACH SIDE OF PIPE PLUS SHORING WIDTH
3. FOR PIPE INSTALLATION IN GROUNDWATER SEE DETAIL 2 ON SHEET C-503
4. WHEN CONTAMINATED SOILS OR GROUNDWATER IS ENCOUNTERED, SEE SECTION 01130 AND 01140 OF THE SPECIFICATIONS
5. FOR PIPE INSTALLATION IN KEMPER CAMPBELL RANCH (STA 140+38± TO STA 142+01±; STA 200+00.00 TO STA 200+53±; STA 300+00.00 TO STA 303+06±) AND BEHIND LEWIS LEARNING CENTER (STA 217+97± TO STA 219+17±), THE PIPE ZONE SHALL BE:

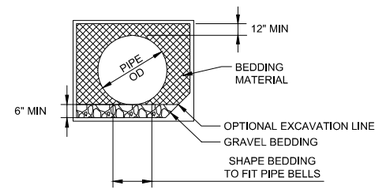

1 PIPE INSTALLATION - NO GROUNDWATER

SCALE: NTS

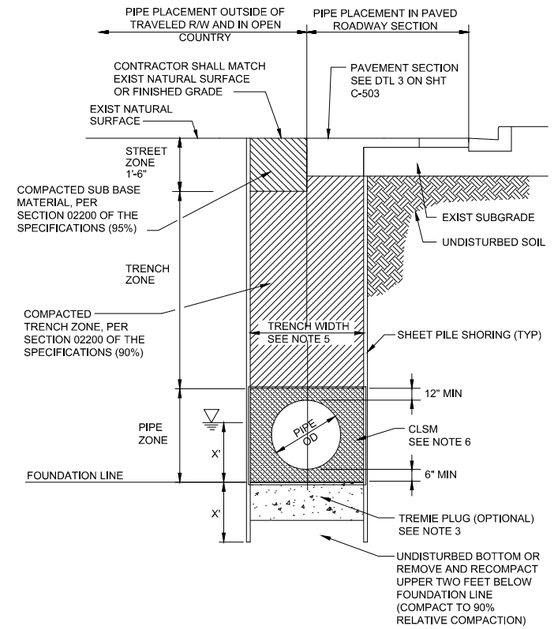

NOTES:

1. BEDDING AND BACKFILL MATERIALS AND COMPACTION PER SECTION 02200 OF THE SPECIFICATIONS.
2. DISTANCE X (FT) IS DISTANCE FROM BOTTOM OF PIPE ZONE TO GROUND WATER ELEVATION. SHEET PILE SHOULD EXTEND FROM THE BOTTOM OF THE PIPE ZONE TO THE BOTTOM OF THE SHEET PILE THE SAME DISTANCE X (FT).
3. WHEN PIPE INSTALLATION ENCOUNTERS GROUNDWATER, CONTRACTOR MAY DEWATER OR INSTALL A TREMIE PLUG. CONTRACTOR IS RESPONSIBLE TO DESIGN AND SUBMIT A DEWATERING METHOD FOR APPROVAL BY THE ENGINEER PRIOR TO CONTRACTOR'S IMPLEMENTATION OF DEWATERING METHOD IN THE FIELD. SEE SECTION 01130 OF THE SPECIFICATIONS.
4. WHEN CONTAMINATED SOILS OR GROUNDWATER IS ENCOUNTERED, SEE SECTION 01130 AND 01140 OF THE SPECIFICATIONS
5. TRENCH WIDTH AT THE UPPER LIMIT OF THE PIPE ZONE SHALL BE WITHIN THE FOLLOWING LIMIT FOR TYPICAL NORMAL BEDDING.
   (A) MAXIMUM TRENCH WIDTH SHALL BE PIPE OF PLUS 12" MAX EACH SIDE OF PIPE PLUS SHORING WIDTH.
   (B) MINIMUM TRENCH WIDTH SHALL BE ELL PLUS 8" MIN EACH SIDE OF PIPE PLUS SHORING WIDTH.
6. FOR PIPE INSTALLATION IN KEMPER CAMPBELL RANCH (STA 140+38± TO STA 142+01±; STA 200+00.00 TO STA 200+53±; STA 300+00.00 TO STA 303+06±) AND BEHIND LEWIS LEARNING CENTER (STA 217+97± TO STA 219+17±), THE PIPE ZONE SHALL BE:

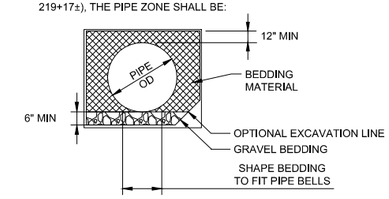

2 PIPE INSTALLATION IN GROUNDWATER

SCALE: NTS

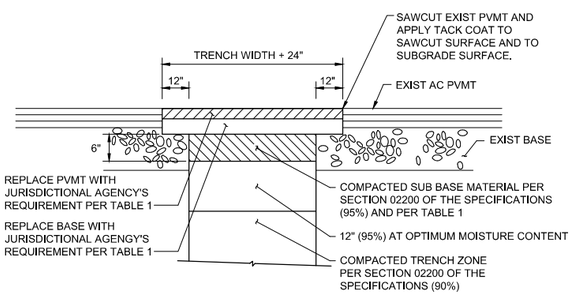

TRENCH PAVEMENT REPLACEMENT

TABLE 1				
LOCATION	PVMT THICKNESS	BASE THICKNESS	SUB BASE THICKNESS	SPECIAL REQUIREMENTS
C STREET	EXISTING + 1" (4" MINIMUM) (SEE NOTE 9)	6" MIN	12" COMPACTED 95%	SEE NOTE 10
7TH STREET	EXISTING + 1" 4" MINIMUM (SEE NOTE 9)	6" MIN	12" COMPACTED 95%	SEE NOTE 10

*FOR D STREET, SEE DETAIL 7 ON SHEET C-502.

NOTES:

1. FOR ALL EXCAVATIONS WITHIN THE CITY OF VICTORVILLE RIGHT-OF-WAY THE CONTRACTOR SHALL OBTAIN AN EXCAVATION PERMIT FROM THE ENGINEERING DEPT.
2. THE CONTRACTOR SHALL NOTIFY UNDERGROUND SERVICE ALERT (2) WORKING DAYS PRIOR TO START OF WORK AT 811.
3. THE CONTRACTOR SHALL NOTIFY THE CITY OF VICTORVILLE ENGINEERING DEPARTMENT (1) WORKING DAYS PRIOR TO START OF WORK TO ARRANGE INSPECTIONS BY THE CITY'S PUBLIC WORKS INSPECTORS.
4. THE CONTRACTOR SHALL ENSURE THAT ALL EXCAVATIONS ARE MADE, PROTECTED AND SUPPORTED AS REQUIRED FOR SAFETY AS PRESCRIBED BY CAL OSHA.
5. ALL STREETS SHALL BE PAVED OR RESURFACED WITH A SELF PROPELLED PAVING MACHINE PER CALTRANS SECTION 39.
6. POT HOLES AND/OR NARROW TRENCH CUTS SHALL NOT BE ALLOWED IN PCC IMPROVEMENTS. ASPHALT SHALL BE SAWCUT, REMOVED AND RECONSTRUCTED IN PANELS AT THE SCORE LINES OR WEAK PLANE JOINTS OR AT LEAST 10' WIDE AND AS DIRECTED BY THE ENGINEER IN THE FIELD.
7. AC PAVEMENT TO BE 4" MIN AND 1" THICKER THAN EXISTING AC PAVEMENT. TOP 1" TO BE PG 64-22 1/2" MAX MEDIUM HOT MIX AC. REMAINING TO BE PG 64-22 3/4" MAX HOT MIX AC PER CALTRANS SECTION 39.
8. AC PAVEMENT ALONG 7TH STREET (STA 105+04± TO STA 109+98±) SHALL BE 4" MIN AND 1" THICKER THAN EXISTING AC PAVEMENT. TOP 1.5" TO BE RUBBERIZED BONDED WEARING COURSE. REMAINING TO BE PG 64-22 3/4" MAX HOT MIX AC PER CALTRANS SECTION 39.
9. EXISTING PAVEMENT STRUCTURAL SECTION IS:
   C STREET (NEAR 11TH STREET): 3" AC OVER 5" AB
   C STREET (NEAR 8TH STREET): 4" AC

3 PAVEMENT REPLACEMENT

SCALE: NTS

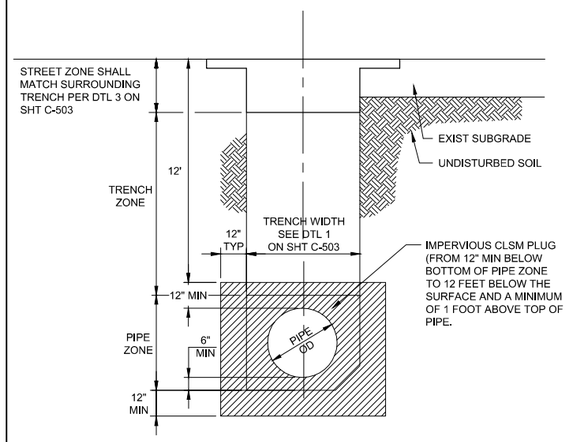

NOTES:

1. TRENCH PLUG SHALL BE 1-FT THICK AND SHALL EXTEND UP TO 12' BELOW THE SURFACE AND A MINIMUM OF 1-FT ABOVE TOP OF PIPE. IT SHALL ALSO EXTEND 12-INCHES BEYOND THE TRENCH WIDTH AND BOTTOM.
2. DISTANCE BETWEEN TRENCH PLUGS SHALL BE AS SHOWN ON THE PROFILE.

4 TRENCH PLUG

SCALE: NTS

TYPE I

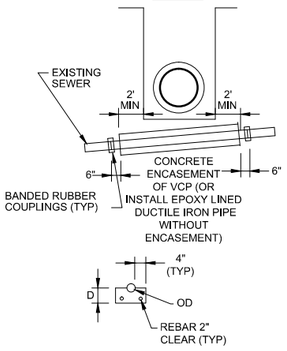

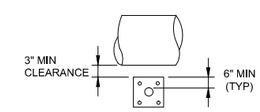

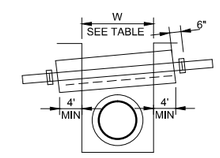

TYPE II

W	DEPTH OF COVER			
	0' TO 8'		8' TO 16'	
	D	BAR #	D	BAR #
3'	12"	4(13)	12"	4(13)
4'	12"	4(13)	12"	5(16)
5'	12"	4(13)	16"	5(16)
6'	12"	5(16)	16"	5(16)
7'	12"	5(16)	16"	6(19)
8'	12"	5(16)	16"	6(19)
9'	12"	6(19)	16"	8(25)
10'	12"	6(19)	16"	8(25)

NOTE:

( ) DENOTES METRIC SYSTEM.

BEAM THICKNESS FOR TYPE II
BAR SIZE FOR TYPE I AND TYPE II

5 PIPE SUPPORT BEAM ACROSS TRENCHES

SCALE: NTS

CALTRANS PERMIT NO. 08-12-N-UT-0064

NOT FOR CONSTRUCTION

TETRA TECH
www.tetratech.com
17885 Von Karman Avenue, Suite 500
Irvine, CA 92614-6213
Tel: (949) 809-5000 Fax: (949) 809-5010

VICTOR VALLEY WASTEWATER RECLAMATION AUTHORITY

MARK	DATE	DESCRIPTION	BY

VVWRA
UPPER NARROWS PIPELINE REPLACEMENT
CIVIL DETAILS 3

Project No.:	135-09065-11001
Designed By:	MBJ
Drawn By:	LEG
Checked By:	LEB

C-503

Copyright: Tetra Tech

Bar Measures 1 inch

10/30/2012 12:23:07 PM - P:\09065\135-09065-11001\CAD\SHEETFILES\C-503-CIVILDETAILS.DWG - JOHNSON, WILLIE

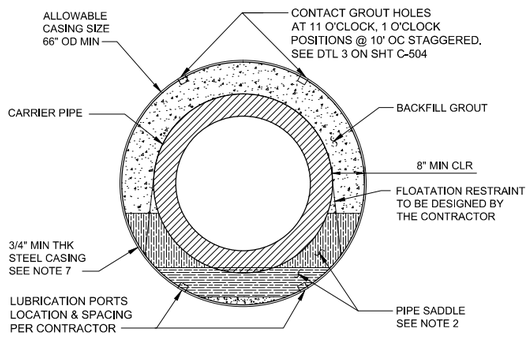

NOTES:

1. CASING SHALL BE INSTALLED BY MICROTUNNELING
2. PIPE SADDLE SHALL BE DESIGN BY CONTRACTOR. SPACING AS REQUIRED PER PIPE MANUFACTURER'S RECOMMENDATION TO MAINTAIN THE CARRIER PIPE INVERT ALIGNMENT DURING WATER FILLING AND BACKFILL GROUT PLACEMENT.
3. ALL STEEL CASING SECTIONS SHALL BE JOINED BY CONTINUOUS WELD OR PERMALOCK JOINT OR APPROVED EQUAL. ALL FIELD WELDS SHALL BE BUTT WELDED, FULL CIRCUMFERENCE WITH FULL PENETRATION.
4. EACH END OF CASING SHALL BE SEALED WITH PSI "END SEAL" MODEL "S" OR APPROVED EQUAL.
5. CARRIER PIPE SHALL BE A SOLID WALL HDPE WITH BUTT FUSED JOINTS.
6. CARRIER PIPE SHALL BE INSTALLED SUCH THAT THE INVERT ELEVATIONS AS SHOWN ON THE DESIGN PLANS ARE MET.
7. THE CONTRACTOR SHALL BE RESPONSIBLE TO INCREASE THE THICKNESS OF 3/4"(t) STEEL CASING TO ACCOMMODATE CONSTRUCTION LOAD WITH APPROVAL BY THE ENGINEER.
8. CONTRACTOR SHALL SUBMIT CALCULATIONS FOR STEEL CASING SIZE AND THICKNESS SIGNED AND SEALED BY A PROFESSIONAL ENGINEER IN THE STATE OF CALIFORNIA.

1 STEEL CASING PIPE FOR TUNNEL

SCALE: NTS

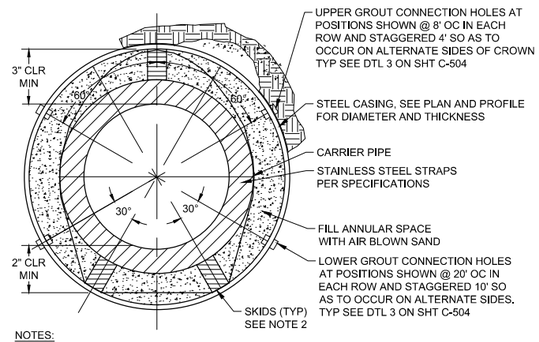

NOTES:

1. CASING SHALL BE INSTALLED BY THE BORE AND JACK METHOD.
2. SKIDS SHALL BE PROVIDED AS SHOWN IN THIS DETAIL. SKIDS SHALL BE PRESSURE TREATED WOOD OR RACI PLASTIC SPACERS OR APPROVED EQUAL. SKIDS SHALL BE DESIGNED BY CONTRACTOR. SPACING AS REQUIRED PER PIPE MANUFACTURER'S RECOMMENDATION TO MAINTAIN THE CARRIER PIPE AIR BLOWN SAND PLACEMENT. CONTRACTOR SHALL SUBMIT SKID DESIGN TO ENGINEER FOR REVIEW AND APPROVAL.
3. CASING THICKNESS & DIAMETER SHOWN ARE MINIMUM. CONTRACTOR MAY ELECT TO USE THICKER WALL OR LARGER DIAMETER CASING AT NO ADDITIONAL COST WITH APPROVAL BY THE ENGINEER.
4. ALL STEEL CASING SECTIONS SHALL BE JOINED BY CONTINUOUS WELD OR PERMALOCK JOINT OR APPROVED EQUAL. ALL FIELD WELDS SHALL BE BUTT WELDED, FULL CIRCUMFERENCE WITH FULL PENETRATION.
5. EACH END OF CASING SHALL BE SEALED WITH PSI "END SEAL" MODEL "S" OR APPROVED EQUAL.
6. CARRIER PIPE SHALL BE INSTALLED SUCH THAT THE INVERT ELEVATIONS AS SHOWN ON THE DESIGN PLANS ARE MET.
7. CASING PIPE SHALL BE NEW.
8. CARRIER PIPE SHALL BE AIR PRESSURE TESTED PRIOR TO FILLING ANNULAR SPACE.
9. PERIPHERY OF CASING TO BE PRESSURE GROUTED AS SHOWN AND AS REQUIRED BY BNSF PERMIT REQUIREMENTS OR AS DIRECTED BY THE GEOTECHNICAL REPRESENTATIVE.
10. CONTRACTOR SHALL SUBMIT CALCULATIONS FOR STEEL CASING SIZE AND THICKNESS SIGNED AND SEALED BY A PROFESSIONAL ENGINEER IN THE STATE OF CALIFORNIA. CALCULATIONS SHALL INCLUDE BNSF'S E-80 LOADING AND CONTRACTOR'S CONSTRUCTION LOADING. IN NO CASE SHALL THE STEEL CASING BE LESS THAN 0.781 INCHES.

2 STEEL CASING PIPE FOR BORE AND JACK

SCALE: NTS

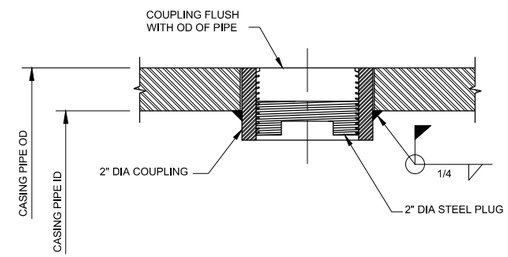

3 STEEL CASING CONTACT GROUT COUPLING

SCALE: NTS

4 NOT USED

SCALE: NTS

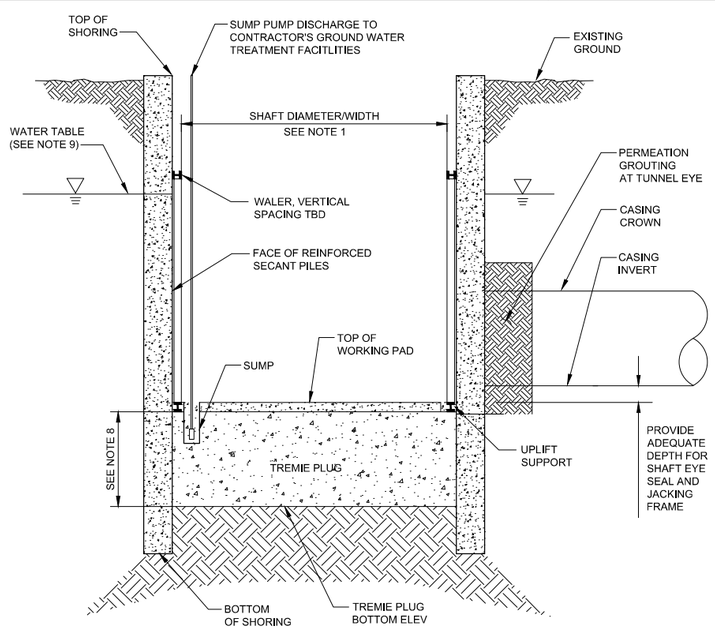

5 OPTION 1 - SEALED SHAFT OR PIT

SCALE: NTS

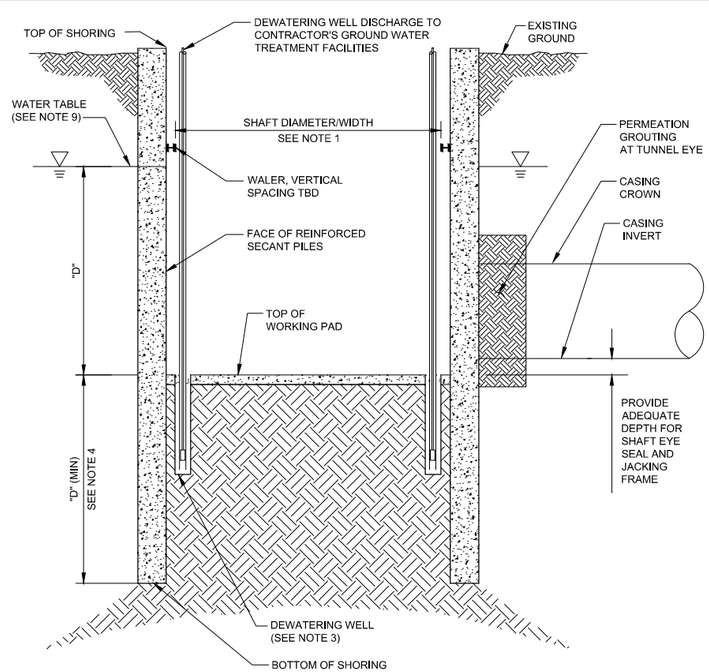

6 OPTION 2 - CUT OFF WALL SHAFT OF PIT

SCALE: NTS

NOTES:

1. SHAFT OR PIT SIZE AND SHAPE SHALL BE DETERMINED BY THE CONTRACTOR TO SUIT SITE SPACE CONSTRAINTS AND MEANS AND METHODS OF CONSTRUCTION.
2. THE CONTRACTOR IS RESPONSIBLE FOR SHAFT OR PIT DESIGN TO SATISFY MINIMUM REQUIREMENTS SHOWN HERE AND ON SHEET C-505. SEE SPEC 02623 FOR ADDITIONAL SHAFT OR PIT REQUIREMENTS.
3. DEWATERING WELL TO FUNCTION AS SUMP DURING SHAFT OPERATION.
4. D = DISTANCE BETWEEN TOP OF WATER TABLE TO TOP OF SHAFT'S OR PIT'S WORKING PAD.
5. FOR SHAFT INFILTRATION GREATER THAN 10 GPM, ADDITIONAL PERMEATION GROUTING OR DEWATERING IS REQUIRED. REFER TO SPECIFICATION FOR SPECIFIC CONDITIONS.
6. SUMP PUMPING WITHIN EXCAVATED SHAFT OR PIT IS REQUIRED TO HANDLE INFILTRATION.
7. DESIGN TREMIE PLUG THICKNESS AND UPLIFT SUPPORT TO RESIST UPLIFT TO COMPLY WITH MINIMUM SPECIFIED FACTOR OF SAFETY.
8. WHEN CONTAMINATED SOILS OR GROUNDWATER IS ENCOUNTERED, SEE SECTION 01130 AND 01140 OF THE SPECIFICATIONS.
9. REFER TO GEOTECHNICAL REPORT BY LEIGHTON IN APPENDIX.

NOT FOR CONSTRUCTION

TETRA TECH
www.tetratech.com
17885 Von Karman Avenue, Suite 500
Irvine, CA 92614-6213
Tel: (949) 809-5000 Fax: (949) 809-5010

VICTOR VALLEY WASTEWATER RECLAMATION AUTHORITY

MARK	DATE	DESCRIPTION	BY

VWWRA
UPPER NARROWS PIPELINE REPLACEMENT

CIVIL DETAILS 4

Project No.:	135-09065-11001
Designed By:	MBJ
Drawn By:	LEG
Checked By:	LEB

C-504

Copyright: Tetra Tech

Bar Measures 1 inch

10/30/2012 1:23:12 PM - P:\09065\135-09065-11001\CAD\SHEETFILES\C-504-CIVILDETAILS.DWG - JOHNSON, WILLIE

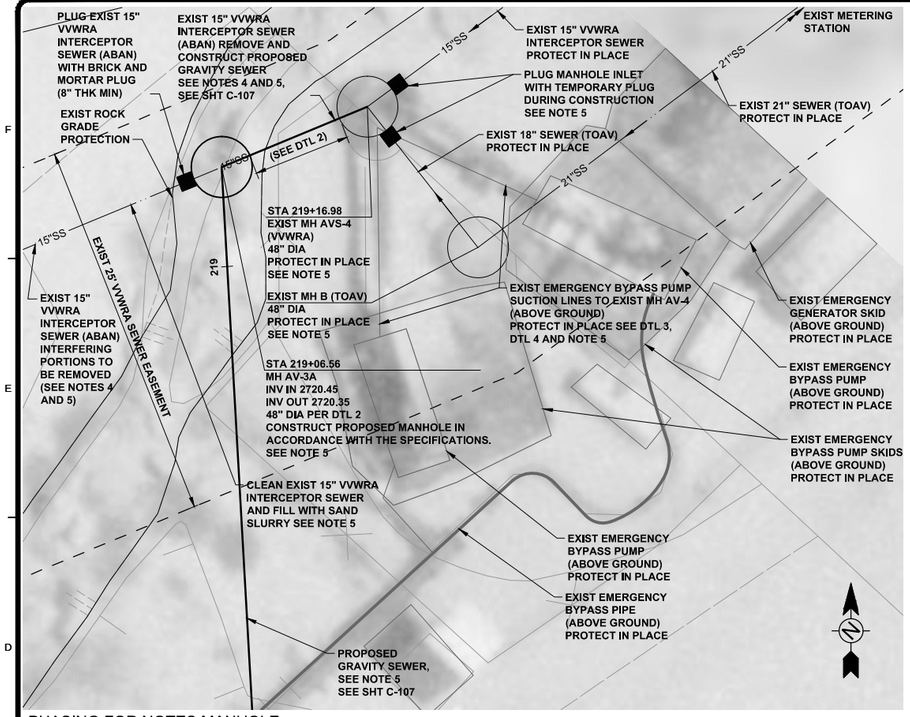

1 STA 219+06.56 MH AV-3A PLAN
SCALE: 1" = 5'

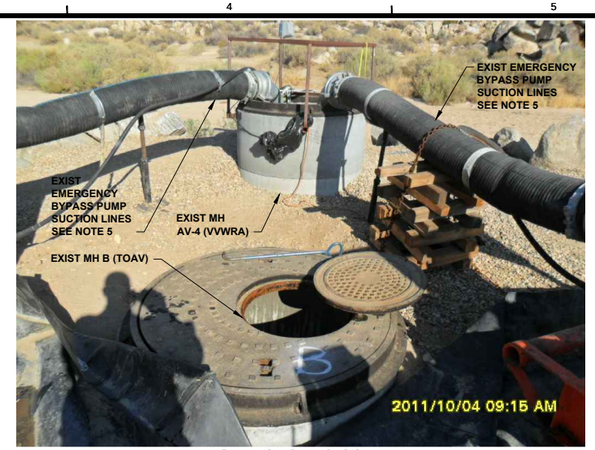

3 STA 219+16.98 EXIST MH AVS-4 PHOTO
SCALE: NTS

4 STA 219+16.98 EXIST MH AVS-4 AT PHOTO
SCALE: NTS

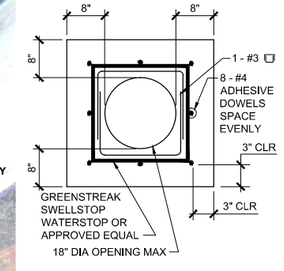

5 CAST-IN-PLACE CONCRETE COLLAR
SCALE: NTS

PHASING FOR NOTES MANHOLE CONSTRUCTION AT EXISTING SEWER CONNECTIONS:

1. CONSTRUCT MH VV-MH4-25A PER NOTES ON SHT C-509.
2. CONSTRUCT MH VV-MH5-9 PER NOTES ON SHT C-508.
3. CONSTRUCT MH AV-3A PER NOTES ON SHT C-507.
4. COMPLETE CONSTRUCTION OF MH VV-MH4-25A PER NOTES ON SHT C-509.
5. THE FOLLOWING IS A RECOMMENDED SEQUENCE OF CONSTRUCTION. THE CONTRACTOR SHALL SUBMIT A SEQUENCE OF CONSTRUCTION OF THE MANHOLE CONNECTIONS TO THE EXIST VVWRA INTERCEPTOR SEWERS TO THE ENGINEER. THE CONTRACTOR SHALL NOT BEGIN CONSTRUCTION OF THE MANHOLE CONNECTIONS TO THE EXIST VVWRA INTERCEPTOR SEWERS UNTIL THE CONTRACTOR RECEIVES APPROVAL OF THE SEQUENCE OF CONSTRUCTION FROM THE ENGINEER.

NOTES:

1. CONTRACTOR SHALL MAINTAIN OPERATION OF SEWER SERVICE AND EMERGENCY BYPASS DURING CONSTRUCTION.
2. CONTRACTOR SHALL FIELD VERIFY LOCATION AND DEPTH OF ALL CONNECTION POINTS AND UTILITY CROSSINGS PRIOR TO THE BEGINNING OF CONSTRUCTION.
3. CONTRACTOR SHALL BE RESPONSIBLE FOR REPAIR OF ANY DAMAGE TO THE EXIST FACILITIES CAUSED BY THE CONSTRUCTION OPERATIONS AT NO ADDITIONAL COST TO VVWRA.
4. ALL EXISTING SEWERS, MANHOLES AND APPURTENANCES TO BE ABANDONED SHALL BE DONE IN ACCORDANCE WITH SHT C-401. ALL INTERFERING PORTIONS OF SEWERS, MANHOLES, AND APPURTENANCES TO BE ABANDONED SHALL BE REMOVED.
5. CONTRACTOR SHALL FOLLOW THE FOLLOWING ORDER OF CONSTRUCTION:
   1. MOVE EXIST EMERGENCY BYPASS PUMP SUCTION LINES FROM EXIST MH AV-4 (VVWRA) TO EXIST MH B (TOAV). EXIST MH B SHALL BECOME THE WET WELL FOR DURATION OF EMERGENCY BYPASS PUMPING OPERATIONS.
   2. PLUG MANHOLE INLETS WITH TEMPORARY PLUG AT POINTS "A" AND "B" (SEE DTL 2)
   3. REMOVE INTERFERING PORTIONS OF EXIST 15" VVWRA INTERCEPTOR SEWER (ABAN) AT POINT "C". (SEE DTL 2)
   4. CLEAN THE EXIST 15" VVWRA INTERCEPTOR SEWER BETWEEN PROPOSED 48" DIA MANHOLE (MH AV-3A) AND EXIST MH AV-3. FILL THE ABANDONED PIPELINE WITH SAND SLURRY. PLUG THE ABANDONED PIPELINE DOWNSTREAM OF PROPOSED 48" DIA MANHOLE (MH AV-3A) INLET (FROM EXIST 15" VVWRA INTERCEPTOR SEWER (ABAN)).
   5. CONSTRUCT PROPOSED 48" DIA MANHOLE (MH AV-3A) AND CONSTRUCT GRAVITY SEWER FROM STA 219+06.56 TO STA 219+16.98. (FROM MH AV-3A TO EXIST MH AV-4)
   6. REMOVE THE TEMPORARY PLUG FROM POINTS "A" AND "B". (SEE DTL 2)
6. FOR MANHOLE WALL PENETRATION BY HDPE OR FPVC PIPE, CONTRACTOR SHALL INSTALL TWO COMPRESSED SEGMENTED STAINLESS STEEL EPDM RUBBER "LINK SEAL" MECHANICAL SEALS BY POWER PLANTS SUPPLY CO OR APPROVED EQUAL MODEL OS-316 WITH PSI NITRILE RUBBER (ONE FOR EACH WALL FACE), TYPICAL EACH PIPE PENETRATION AT ALL MANHOLES. LINK SEAL TO PROVIDE INSURANCE AGAINST ASTM B117-97 SALT SPRAY EXPOSURE TEST WITH ASTM A-316 SS BOLTS AND HARDWARE. LINK SEAL TO BE INSTALLED PER THE MANUFACTURER'S WRITTEN INSTRUCTIONS.
7. CONTRACTOR SHALL RELOCATE EXIST EMERGENCY BYPASS SYSTEM, AS NECESSARY ONLY, NEARBY ON SITE. CONTRACTOR SHALL COORDINATE WITH VVWRA.
8. ARROWS DENOTE DIRECTION OF EXIST AND PROPOSED SEWER FLOW.

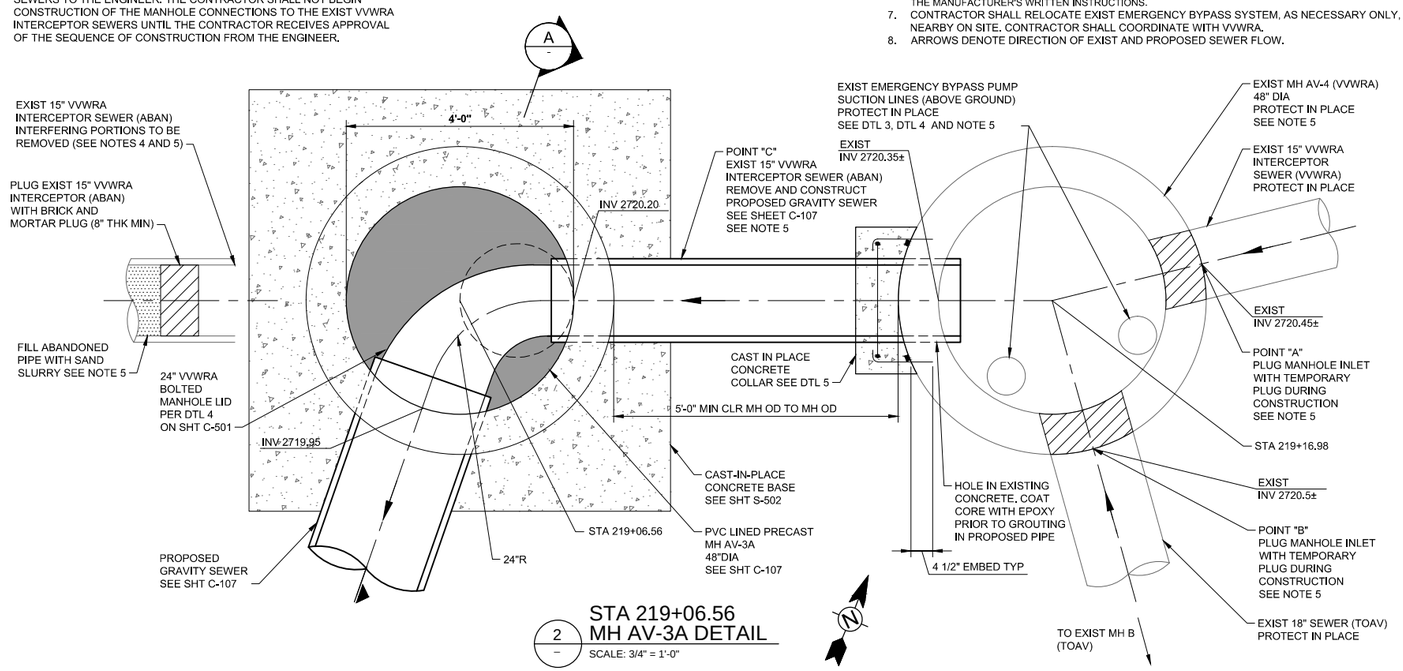

2 STA 219+06.56 MH AV-3A DETAIL
SCALE: 3/4" = 1'-0"

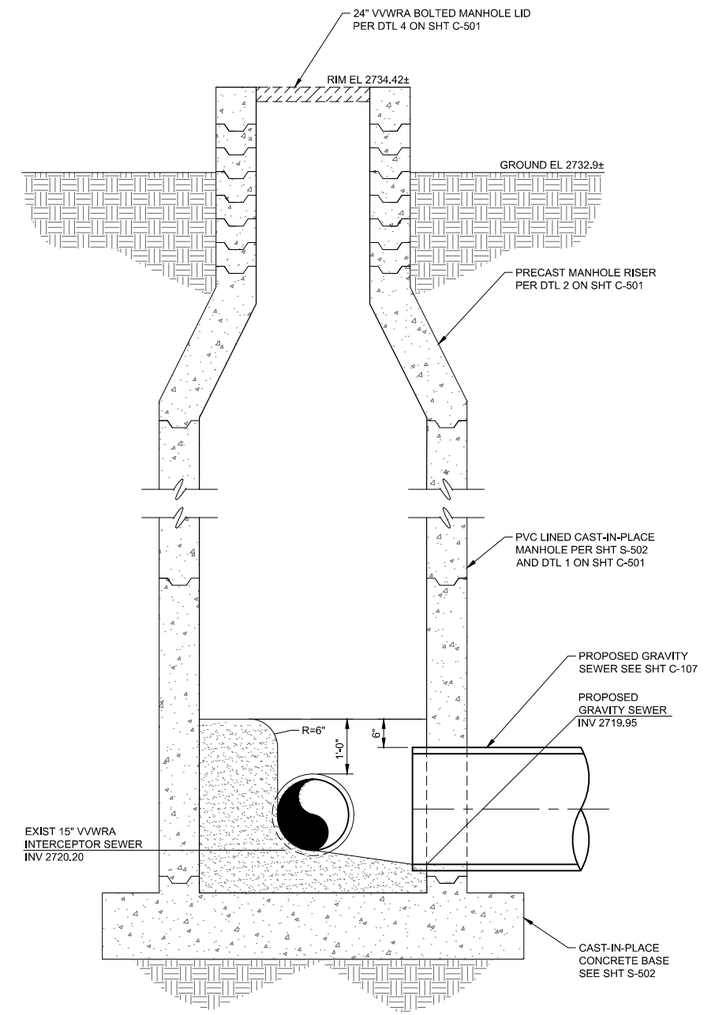

A STA 219+06.56 MH AV-3A SECTION
SCALE: 3/4" = 1'-0"

NOT FOR CONSTRUCTION

TETRA TECH
www.tetratech.com
17885 Von Karman Avenue, Suite 500
Irvine, CA 92614-6213
Tel: (949) 809-5000 Fax: (949) 809-5010

VICTOR VALLEY WASTEWATER RECLAMATION AUTHORITY

MARK	DATE	DESCRIPTION	BY

VVWRA
UPPER NARROWS PIPELINE REPLACEMENT
CONNECTION DETAILS
STA 219+06.56
MH AV-3A

Project No.:	135-09065-11001
Designed By:	DLW
Drawn By:	SHD
Checked By:	LEB

C-507

Bar Measures 1 inch

Copyright: Tetra Tech

10/30/2012 1:23:25 PM - P:\09065\135-09065-11001\CAD\SHEETFILES\C-507-CONNECTIONDETAILS.DWG - JOHNSON, WILLIE

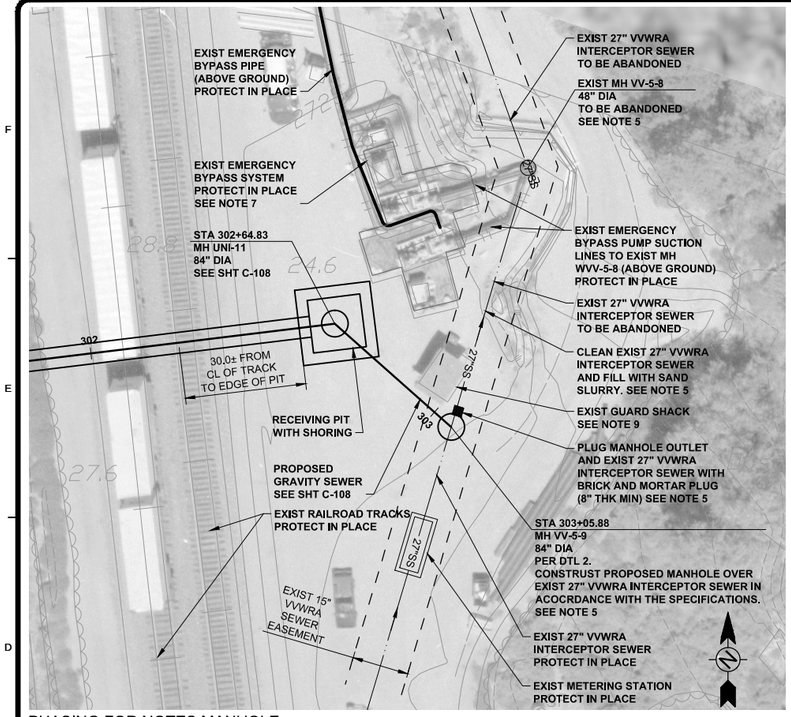

1 STA 303+05.88 MH VV-5-9 PLAN
SCALE: 1" = 20'

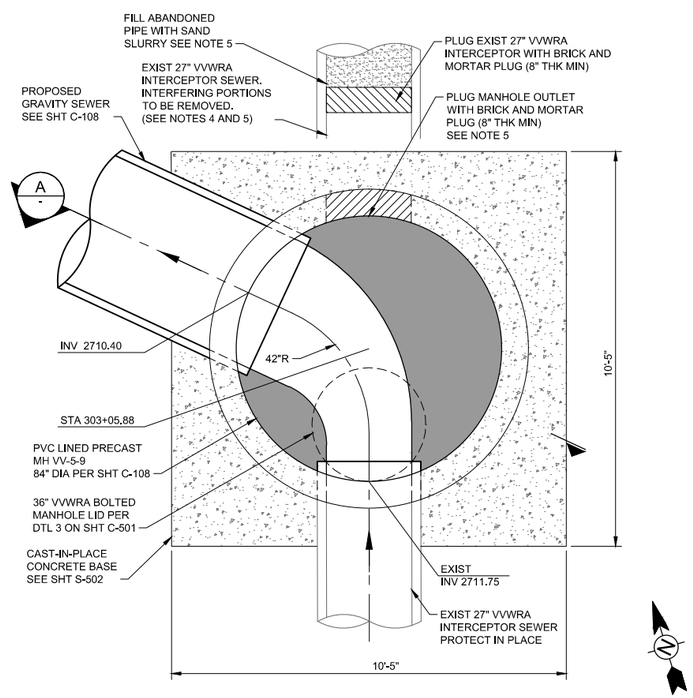

2 STA 303+05.88 MH VV-5-9 DETAIL
SCALE: 1/2" = 1'-0"

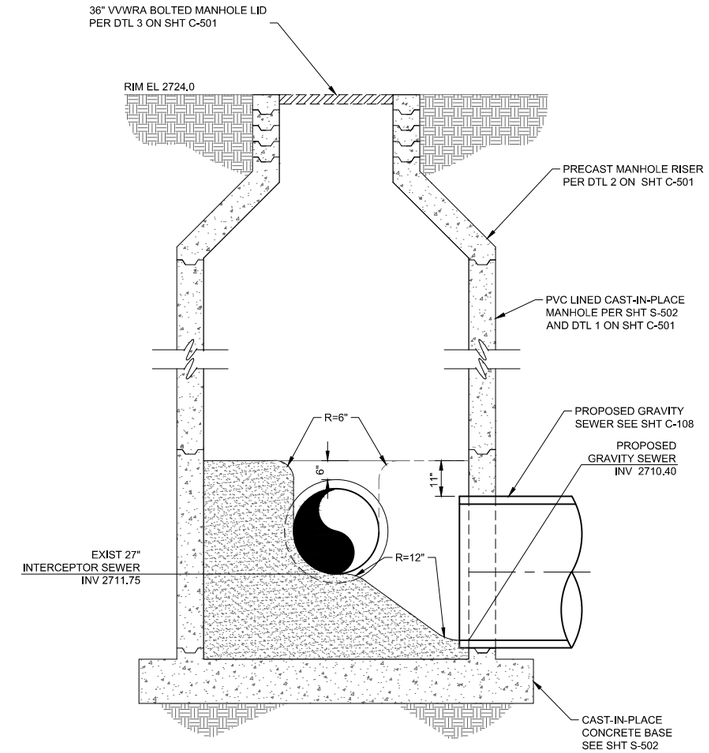

A STA 303+05.88 MH VV-5-9 SECTION
SCALE: 1/2" = 1'-0"

PHASING FOR NOTES MANHOLE CONSTRUCTION AT EXISTING SEWER CONNECTIONS:

1. CONSTRUCT MH VV-MH4-25A PER NOTES ON SHT C-509.
2. CONSTRUCT MH VV-MH5-9 PER NOTES ON SHT C-508.
3. CONSTRUCT MH AV-3A PER NOTES ON SHT C-507.
4. COMPLETE CONSTRUCTION OF MH VV-MH4-25A PER NOTES ON SHT C-509.
5. THE FOLLOWING IS A RECOMMENDED SEQUENCE OF CONSTRUCTION. THE CONTRACTOR SHALL SUBMIT A SEQUENCE OF CONSTRUCTION OF THE MANHOLE CONNECTIONS TO THE EXIST VVWRA INTERCEPTOR SEWERS TO THE ENGINEER. THE CONTRACTOR SHALL NOT BEGIN CONSTRUCTION OF THE MANHOLE CONNECTIONS TO THE EXIST VVWRA INTERCEPTOR SEWERS UNTIL THE CONTRACTOR RECEIVES APPROVAL OF THE SEQUENCE OF CONSTRUCTION FROM THE ENGINEER.

NOTES:

1. CONTRACTOR SHALL MAINTAIN OPERATION OF SEWER SERVICE AND EMERGENCY BYPASS DURING CONSTRUCTION.
2. CONTRACTOR SHALL FIELD VERIFY LOCATION AND DEPTH OF ALL CONNECTION POINTS AND UTILITY CROSSINGS PRIOR TO THE BEGINNING OF CONSTRUCTION.
3. CONTRACTOR SHALL BE RESPONSIBLE FOR REPAIR OF ANY DAMAGE TO THE EXIST FACILITIES CAUSED BY THE CONSTRUCTION OPERATIONS AT NO ADDITIONAL COST TO VVWRA.
4. ALL EXISTING SEWERS, MANHOLES AND APPURTENANCES TO BE ABANDONED SHALL BE DONE IN ACCORDANCE WITH SHT C-401. ALL INTERFERING PORTIONS OF SEWERS, MANHOLES, AND APPURTENANCES TO BE ABANDONED SHALL BE REMOVED.
5. CONTRACTOR SHALL FOLLOW THE FOLLOWING ORDER OF CONSTRUCTION:
   1. CONSTRUCT PROPOSED 84" DIA MANHOLE OVER THE EXIST 27" VVWRA INTERCEPTOR SEWER
   2. REMOVE INTERFERING PORTIONS OF THE EXIST 27" VVWRA INTERCEPTOR SEWER IN ORDER TO INSTALL TEMPORARY BYPASS DEVICE. (TEMPORARY BYPASS DEVICE SHALL CONNECT THE EXIST 36" VVWRA INTERCEPTOR SEWER TO THE PROPOSED 48" GRAVITY SEWER.)
   3. REMOVE ALL REMAINING INTERFERING PORTIONS OF THE EXIST 27" VVWRA INTERCEPTOR SEWER.
   4. CLEAN THE EXIST 27" VVWRA INTERCEPTOR SEWER BETWEEN PROPOSED 84" DIA MANHOLE (MH VV-5-9) AND EXIST MH VV-5-8, FILL THE ABANDONED PIPELINE WITH SAND SLURRY, PLUG THE ABANDONED PIPELINE DOWNSTREAM OF PROPOSED 84" DIA MANHOLE (MH VV-5-9) INLET (FROM EXIST 27" VVWRA INTERCEPTOR SEWER (ABAN)).
   5. CONSTRUCT SHELF AND CHANNEL IN PROPOSED 84" DIA MANHOLE (MH VV-5-9).
   6. INSTALL T-LOCK OR ARROWLOCK PVC LINER TO COVER ALL EXPOSED CONCRETE IN PROPOSED 84" DIA MANHOLE (MH VV-5-9).
   7. REMOVE TEMPORARY BYPASS DEVICE.
6. FOR MANHOLE WALL PENETRATION BY HDPE OR FPVC PIPE, CONTRACTOR SHALL INSTALL TWO COMPRESSED SEGMENTED STAINLESS STEEL EPDM RUBBER "LINK SEAL" MECHANICAL SEALS BY POWER PLANTS SUPPLY CO OR APPROVED EQUAL MODEL OS-316 WITH PSI NITRILE RUBBER (ONE FOR EACH WALL FACE). TYPICAL EACH PIPE PENETRATION AT ALL MANHOLES. LINK SEAL TO PROVIDE INSURANCE AGAINST ASTM B117-97 SALT SPRAY EXPOSURE TEST WITH ASTM A-316 SS BOLTS AND HARDWARE. LINK SEAL TO BE INSTALLED PER THE MANUFACTURER'S WRITTEN INSTRUCTIONS.
7. BORE PIT AND RECEIVING PIT LOCATIONS AND DIMENSIONS TO BE DETERMINED BY CONTRACTOR. CONTRACTOR SHALL FOLLOW ALL REQUIREMENTS OF BNSF (SEE APPENDIX XX OF SPECIFICATIONS).
8. FOR SITE PLAN OF KEMPER CAMPBELL RANCH, SEE SHT C-402.
9. CONTRACTOR SHALL RELOCATE EXIST GUARD SHACK NEARBY ON SITE. CONTRACTOR SHALL COORDINATE WITH VVWRA.
10. ARROWS DENOTE DIRECTION OF EXIST AND PROPOSED SEWER FLOW.

NOT FOR CONSTRUCTION

TETRA TECH
www.tetratech.com
17885 Von Karman Avenue, Suite 500
Irvine, CA 92614-6213
Tel: (949) 809-5000 Fax: (949) 809-5010

VICTOR VALLEY WASTEWATER RECLAMATION AUTHORITY

MARK	DATE	DESCRIPTION	BY

VVWRA
UPPER NARROWS PIPELINE REPLACEMENT
CONNECTION DETAILS
STA 303+05.88
MH VV-5-9

Project No.:	135-09065-11001
Designed By:	DLW
Drawn By:	SHD
Checked By:	LEB

C-508

Copyright: Tetra Tech

Bar Measures 1 inch

10/30/2012 1:23:38 PM - P:\09065\135-09065-11001\CAD\SHEETFILES\C-508-CONNECTIONDETAILS.DWG - JOHNSON, WILLIE

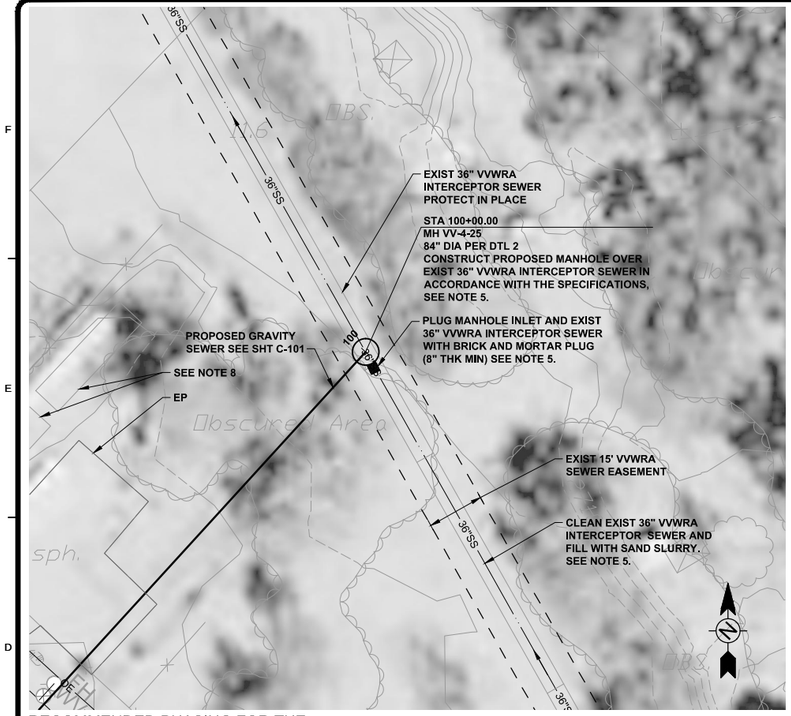

RECOMMENDED PHASING FOR THE CONSTRUCTION OF PROPOSED MANHOLES AT CONNECTIONS TO THE EXIST VVWRA INTERCEPTOR SEWERS (SEE DTL 3 ON SHT C-509):

1. BEGIN CONSTRUCTION OF MH VV-4-25A PER NOTE 5, SUB-NOTES 1 AND 2 ON SHT C-509.
2. CONSTRUCT MH AV-3A PER NOTE 5 ON SHT C-507.
3. CONSTRUCT MH VV-5-9 PER NOTE 5 ON SHT C-508.
4. COMPLETE CONSTRUCTION OF MH VV-4-25A PER NOTE 5, SUB-NOTES 3 THROUGH 8 ON SHT C-509.

(NOTE:A: IF MH VV-5-9 IS CONSTRUCTED BEFORE MH AV-3A IS CONSTRUCTED, THEN THE CONTRACTOR SHALL PREVENT SEWAGE FLOW FROM ENTERING THE PROPOSED SEWER AND SIPHON AT STA 200+05± (SEE SHT C-106), SUCH AS BY INSTALLING A TEMPORARY PLUG AT THE MH UNI-9 INLET TO THE PROPOSED GRAVITY SEWER.

1 – STA 100+00.00 MH VV-4-25A PLAN

SCALE: 1" = 20'

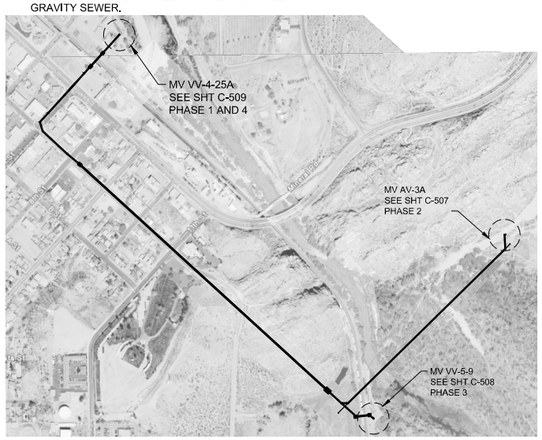

MANHOLE CONNECTIONS TO EXIST VVWRA INTERCEPTOR SEWER

SCALE: 1" = 600'

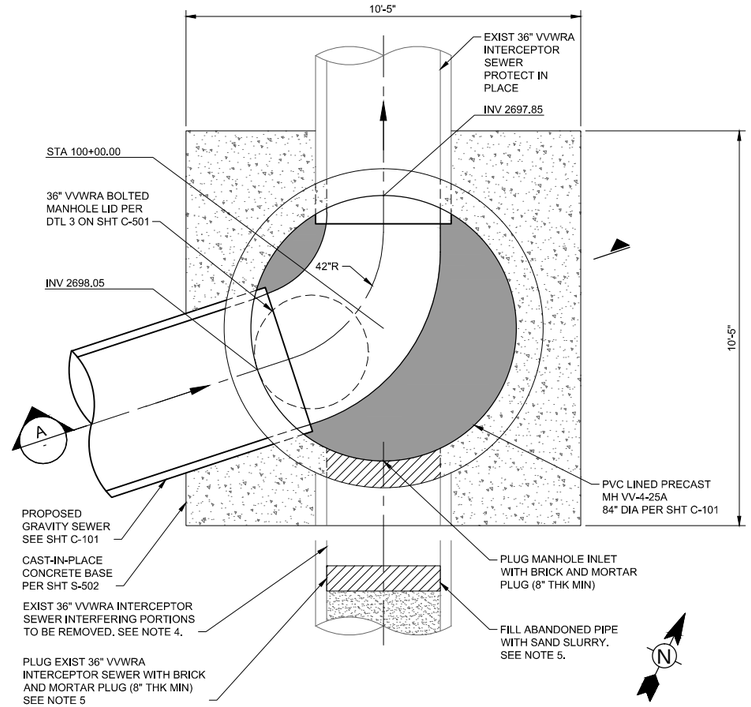

2 – STA 100+00.00 MH VV-4-25A DETAIL

SCALE: 1/2" = 1'-0"

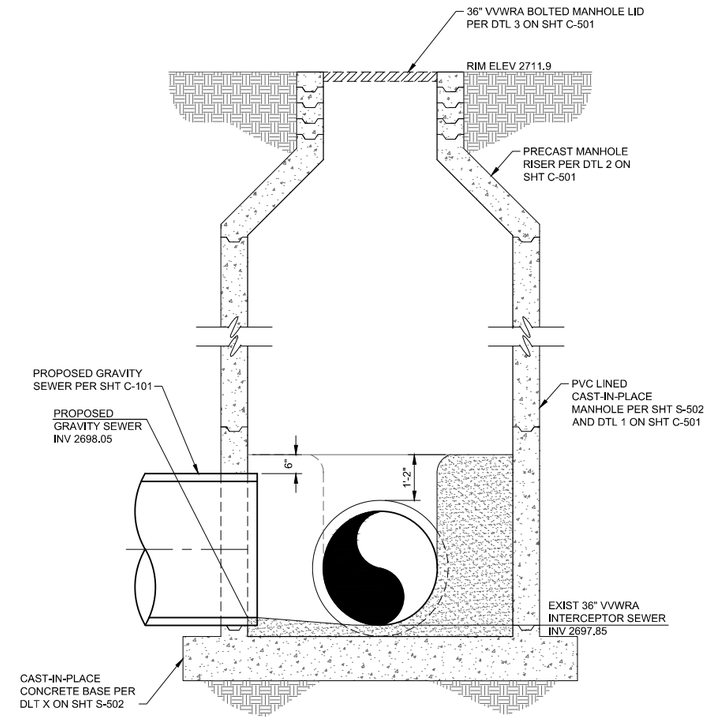

A – STA 100+00.00 MH VV-4-25A SECTION

SCALE: 1/2" = 1'-0"

NOTES:

1. CONTRACTOR SHALL MAINTAIN OPERATION OF SEWER SERVICE DURING CONSTRUCTION. SEE NOTE 5.
2. CONTRACTOR SHALL FIELD VERIFY LOCATION AND DEPTH OF ALL CONNECTION POINTS AND UTILITY CROSSINGS PRIOR TO THE BEGINNING OF CONSTRUCTION.
3. CONTRACTOR SHALL BE RESPONSIBLE FOR REPAIR OF ANY DAMAGE TO THE EXIST FACILITIES CAUSED BY THE CONSTRUCTION OPERATIONS AT NO ADDITIONAL COST TO VVWRA.
4. ALL EXISTING SEWERS, MANHOLES AND APPURTENANCES TO BE ABANDONED SHALL BE DONE IN ACCORDANCE WITH SPECIFICATION SECTION XXXXX. ALL INTERFERING PORTIONS OF SEWERS, MANHOLES, AND APPURTENANCES TO BE ABANDONED SHALL BE REMOVED.
5. THE FOLLOWING IS A RECOMMENDED SEQUENCE OF CONSTRUCTION. THE CONTRACTOR SHALL SUBMIT A SEQUENCE OF CONSTRUCTION OF THE MANHOLE CONNECTIONS TO THE EXIST VVWRA INTERCEPTOR SEWERS TO THE ENGINEER. THE CONTRACTOR SHALL NOT BEGIN CONSTRUCTION OF THE MANHOLE CONNECTIONS TO THE EXIST VVWRA INTERCEPTOR SEWERS UNTIL THE CONTRACTOR RECEIVES APPROVAL OF THE SEQUENCE OF CONSTRUCTION FROM THE ENGINEER.
   1. CONSTRUCT PROPOSED 84" DIA MANHOLE OVER THE EXIST 36" VVWRA INTERCEPTOR SEWER.
   2. REMOVE INTERFERING PORTIONS OF THE EXIST 36" VVWRA INTERCEPTOR IN ORDER TO INSTALL "Y" STYLE TEMPORARY BYPASS DEVICE. (TEMPORARY BYPASS DEVICE SHALL ALLOW FLOW THROUGH THE EXIST 36" VVWRA INTERCEPTOR SEWER AND FROM THE PROPOSED 48" GRAVITY SEWER.)

   AFTER THE CONNECTIONS TO THE EXIST VVWRA INTERCEPTOR SEWERS AT MH VV-5-9 (SEE SHT C-508) AND MH AV-3A (SEE SHT C-507) ARE COMPLETE AND THE PROPOSED SEWERS ARE IN SERVICE, THEN:

   3. REMOVE "Y" STYLE TEMPORARY BYPASS DEVICE AND INSTALL IN ITS PLACE A ONE WAY TEMPORARY BYPASS DEVICE. (ONE-WAY TEMPORARY BYPASS DEVICE SHALL ALLOW FLOW FROM THE PROPOSED 48" GRAVITY SEWER TO THE EXIST 36" VVWRA INTERCEPTOR SEWER.)
   4. REMOVE ALL REMAINING INTERFERING PORTIONS OF THE EXIST 36" VVWRA INTERCEPTOR SEWER.
   5. CLEAN THE EXIST 36" VVWRA INTERCEPTOR SEWER BETWEEN PROPOSED 84" DIA MANHOLE (MH VV-4-25A) AND EXIST MH VV-5-1, FILL THE ABANDONED PIPELINE WITH SAND SLURRY, PLUG THE ABANDONED PIPELINE UPSTREAM OF PROPOSED 84" DIA MANHOLE (MH VV-4-25A), AND PLUG PROPOSED 84" DIA MANHOLE (MH VV-4-25A) INLET (FROM EXIST 36" VVWRA INTERCEPTOR SEWER (ABAN).
   6. CONSTRUCT SHELF AND CHANNEL IN PROPOSED 84" DIA MANHOLE (MH VV-4-25A).
   7. INSTALL T-LOCK OR ARROWLOCK PVC LINER TO COVER ALL EXPOSED CONCRETE IN PROPOSED 84" DIA MANHOLE (MH VV-4-25A).
   8. REMOVE ONE-WAY TEMPORARY BYPASS DEVICE.
6. FOR MANHOLE WALL PENETRATION BY HDPE OR FPVC PIPE, CONTRACTOR SHALL INSTALL TWO COMPRESSED SEGMENTED STAINLESS STEEL EPDM RUBBER "LINK SEAL" MECHANICAL SEALS BY POWER PLANTS SUPPLY CO OR APPROVED EQUAL MODEL OS-316 WITH PSI NITRILE RUBBER (ONE FOR EACH WALL FACE). TYPICAL EACH PIPE PENETRATION AT ALL MANHOLES. LINK SEAL TO PROVIDE INSURANCE AGAINST ASTM B117-97 SALT SPRAY EXPOSURE TEST WITH ASTM A-316 SS BOLTS AND HARDWARE. LINK SEAL TO BE INSTALLED PER THE MANUFACTURER'S WRITTEN INSTRUCTIONS.
7. ARROWS DENOTE DIRECTION OF EXIST AND PROPOSED SEWER FLOW.
8. CONTRACTOR SHALL MOVE CABOOSE, MOTOR HOME, AND ALL OTHER PROPERTY WHICH IS WITHIN THE PROPOSED VVWRA SEWER INTERCEPTOR ALIGNMENT EASEMENT AND IN THE WAY OF CONSTRUCTION ACTIVITIES, PRIOR TO CONSTRUCTION, TO A LOCATION SUITABLE TO THE LOCAL RESIDENT, AND SHALL PROVIDE THE LOCAL RESIDENT WITH EQUIVALENT EXISTING TEMPORARY UTILITIES AT THAT LOCATION. CONTRACTOR SHALL RESTORE ALL MOVED ITEMS TO THE PRE-CONSTRUCTION LOCATION AND SHALL RESTORE ALL CONNECTIONS AND UTILITIES TO THE SATISFACTION OF THE LOCAL RESIDENT AFTER CONSTRUCTION IS COMPLETE. CONTRACTOR SHALL RESTORE THE PROPERTY OF THE LOCAL RESIDENT, INCLUDING BUT NOT LIMITED TO, ALL ASPHALT PAVING, GRAVEL, ROCKS, UTILITIES, AND GRADING TO ITS PRE-CONSTRUCTION CONDITION TO THE SATISFACTION OF THE LOCAL RESIDENT. FOR EACH TREE ON THE PROPERTY OF THE LOCAL RESIDENT THAT THE CONTRACTOR MUST REMOVE FOR CONSTRUCTION OF THE PROPOSED VVWRA SEWER INTERCEPTOR, CONTRACTOR SHALL RE-PLANT TWO TREES OF THE SAME SPECIES OF MINIMUM 36-INCH BOX, IN THE PRE-CONSRUCTION LOCATION OF IN A LOCATION SUITABLE TO THE LOCAL RESIDENT, AFTER CONSTRUCTION IS COMPLETE.

NOT FOR CONSTRUCTION

TETRA TECH
www.tetratech.com
17885 Von Karman Avenue, Suite 500
Irvine, CA 92614-6213
Tel: (949) 809-5000 Fax: (949) 809-5010

VICTOR VALLEY WASTEWATER RECLAMATION AUTHORITY

MARK	DATE	DESCRIPTION	BY

VVWRA
UPPER NARROWS PIPELINE REPLACEMENT

CONNECTION DETAILS
STA 100+00.00
MH VV-4-25A

Project No.:	135-09065-11001
Designed By:	DLW
Drawn By:	SHD
Checked By:	LEB

C-509

Copyright: Tetra Tech

Bar Measures 1 inch

10/30/2012 1:23:50 PM - P:\09065\135-09065-11001\CAD\SHEETFILES\C-509-CONNECTIONDETAILS.DWG - JOHNSON, WILLIE

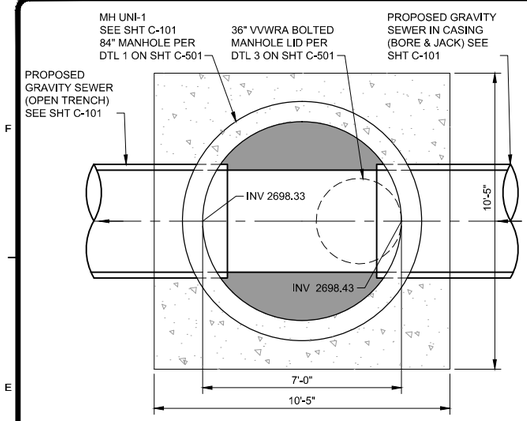

1 MH UNI-1 AT STA 101+95.00
SCALE: 3/8"=1'-0"

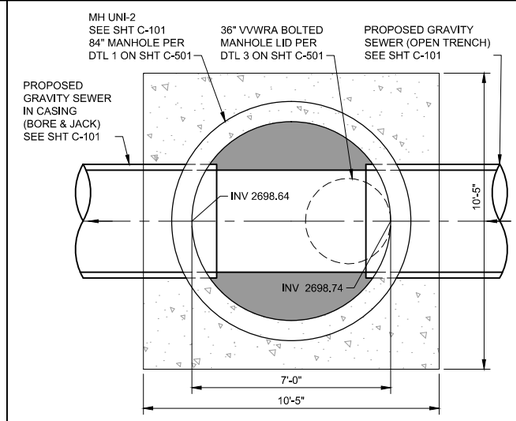

2 MH UNI-2 AT STA 103+38.00
SCALE: 3/8"=1'-0"

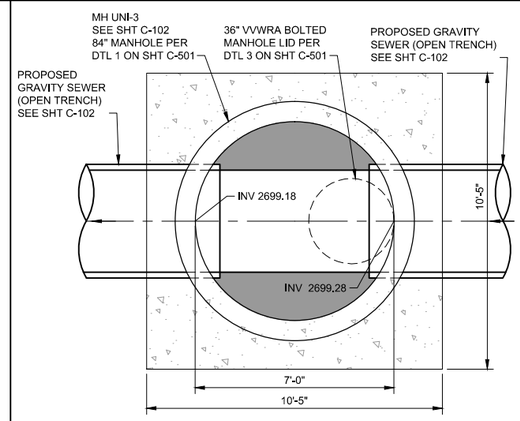

3 MH UNI-3 AT STA 106+43.00
SCALE: 3/8"=1'-0"

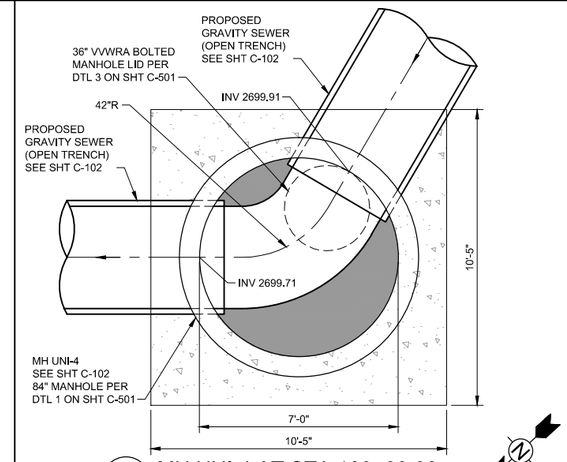

4 MH UNI-4 AT STA 109+33.00
SCALE: 3/8"=1'-0"

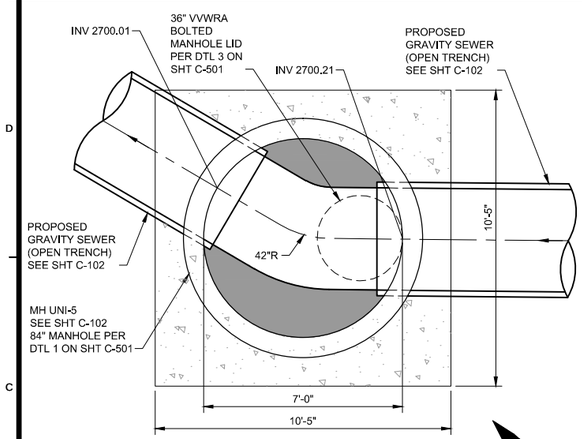

5 MH UNI-5 AT STA 110+08.00
SCALE: 3/8"=1'-0"

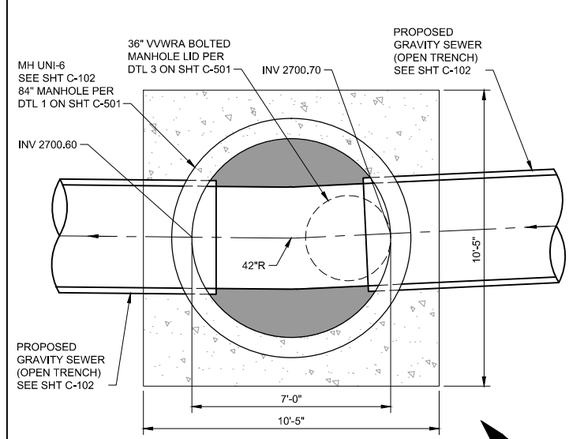

6 MH UNI-6 AT STA 112+73.00
SCALE: 3/8"=1'-0"

NOTE:
FOR MANHOLE WALL PENETRATION BY HDPE OR FPVC PIPE, CONTRACTOR SHALL INSTALL TWO COMPRESSED SEGMENTED STAINLESS STEEL EPDM RUBBER "LINK SEAL" MECHANICAL SEALS BY POWER PLANTS SUPPLY CO OR APPROVED EQUAL MODEL OS-316 WITH PSI NITRILE RUBBER (ONE FOR EACH WALL FACE), TYPICAL EACH PIPE PENETRATION AT ALL MANHOLES. LINK SEAL TO PROVIDE INSURANCE AGAINST ASTM B117-97 SALT SPRAY EXPOSURE TEST WITH ASTM A-316 SS BOLTS AND HARDWARE. LINK SEAL TO BE INSTALLED PER THE MANUFACTURER'S WRITTEN INSTRUCTIONS.

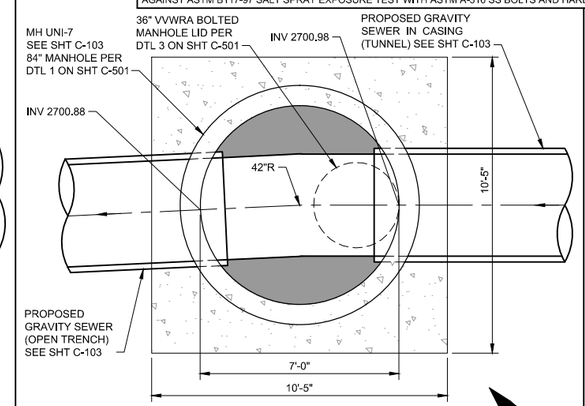

7 MH UNI-7 AT STA 114+04.84
SCALE: 3/8"=1'-0"

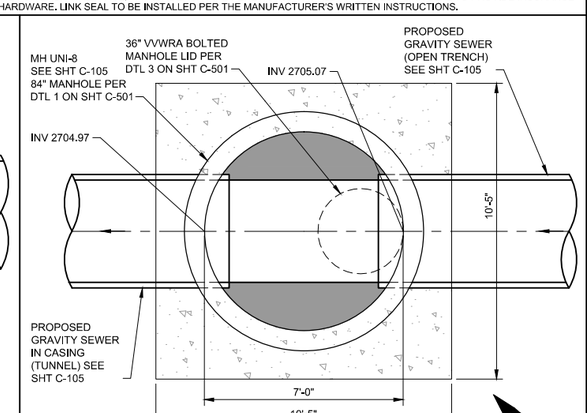

8 MH UNI-8 AT STA 140+68.83
SCALE: 3/8"=1'-0"

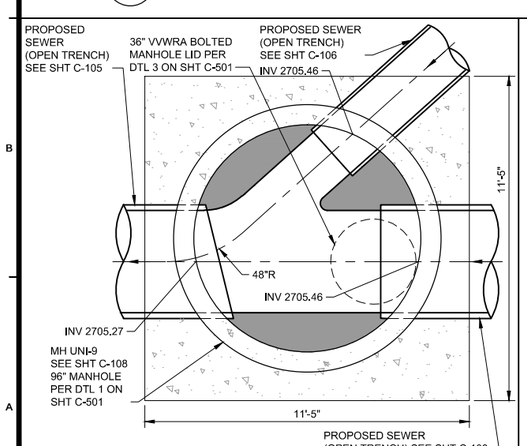

9 MH UNI-9 AT STA 142+06.82, 200+00.00 & 300+00.00
SCALE: 3/8"=1'-0"

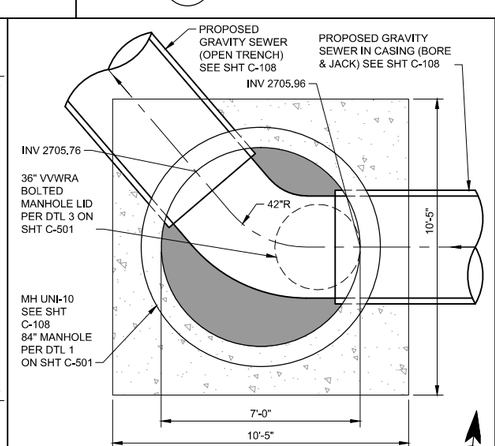

10 MH UNI-10 AT STA 301+58.69
SCALE: 3/8"=1'-0"

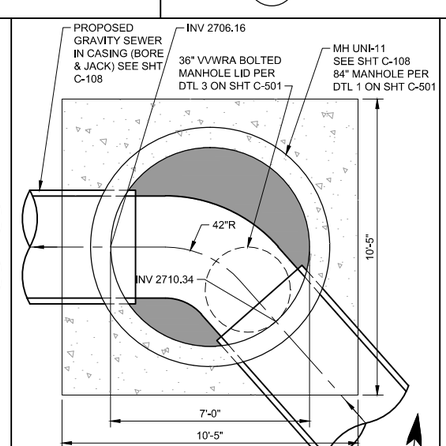

11 MH UNI-11 AT STA 302+64.83
SCALE: 3/8"=1'-0"

12 NOT USED
SCALE: 3/8"=1'-0"

13 NOT USED
SCALE: 3/8"=1'-0"

NOT FOR CONSTRUCTION

TETRA TECH
www.tetratech.com
17885 Von Karman Avenue, Suite 500
Irvine, CA 92614-6213
Tel: (949) 809-5000 Fax: (949) 809-5010

VICTOR VALLEY WASTEWATER RECLAMATION AUTHORITY

MARK	DATE	DESCRIPTION	BY

VVWRA
UPPER NARROWS PIPELINE REPLACEMENT
MANHOLE BASE DETAILS

Project No.:	135-09065-11001
Designed By:	DLW
Drawn By:	LEG
Checked By:	LEB

C-510

Copyright: Tetra Tech

Bar Measures 1 inch

10/30/2012 1:23:56 PM - P:\09065\135-09065-11001\CAD\SHEETFILES\C-510-MANHOLEBASEDETAILS.DWG - JOHNSON, WILLIE

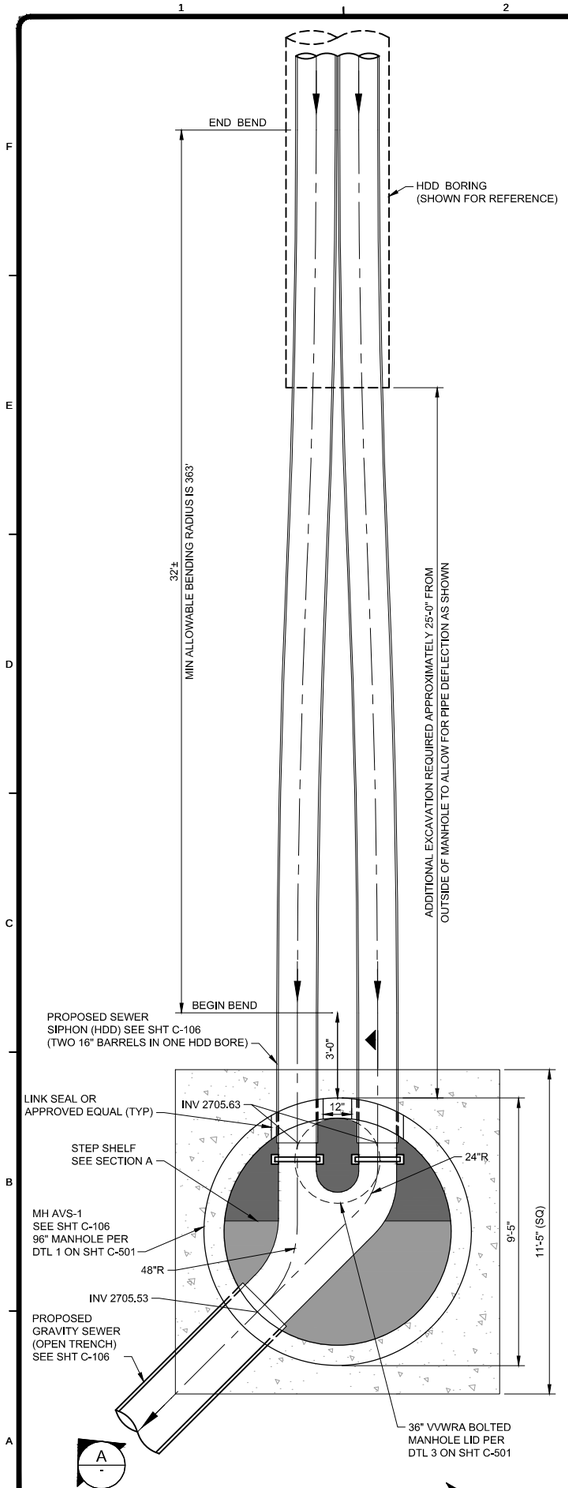

1 MH AVS-1 AT STA 200+53.04

SCALE: 3/8"=1'-0"

NOTE:
FOR MANHOLE WALL PENETRATION BY HDPE OR FPVC PIPE, CONTRACTOR SHALL INSTALL TWO COMPRESSED SEGMENTED STAINLESS STEEL EPDM RUBBER "LINK SEAL" MECHANICAL SEALS BY POWER PLANTS SUPPLY CO OR APPROVED EQUAL MODEL OS-316 WITH PSI NITRILE RUBBER (ONE FOR EACH WALL FACE), TYPICAL EACH PIPE PENETRATION AT ALL MANHOLES. LINK SEAL TO PROVIDE INSURANCE AGAINST ASTM B117-97 SALT SPRAY EXPOSURE TEST WITH ASTM A-316 SS BOLTS AND HARDWARE. LINK SEAL TO BE INSTALLED PER THE MANUFACTURER'S WRITTEN INSTRUCTIONS.

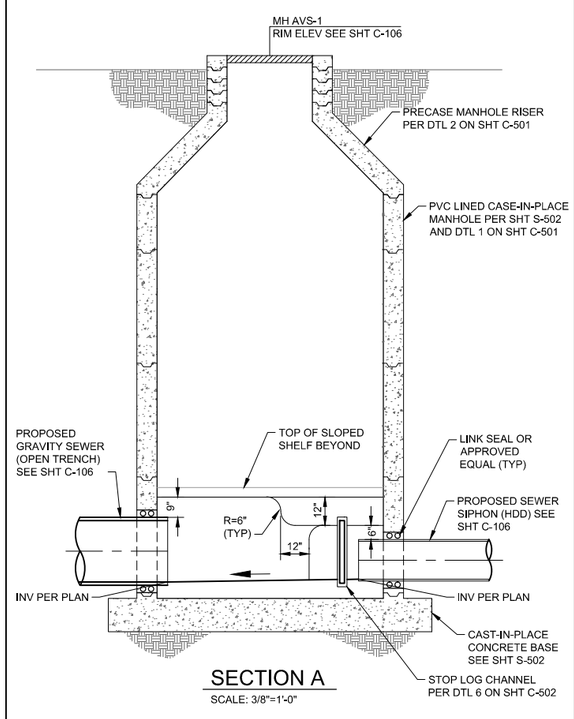

SECTION A

SCALE: 3/8"=1'-0"

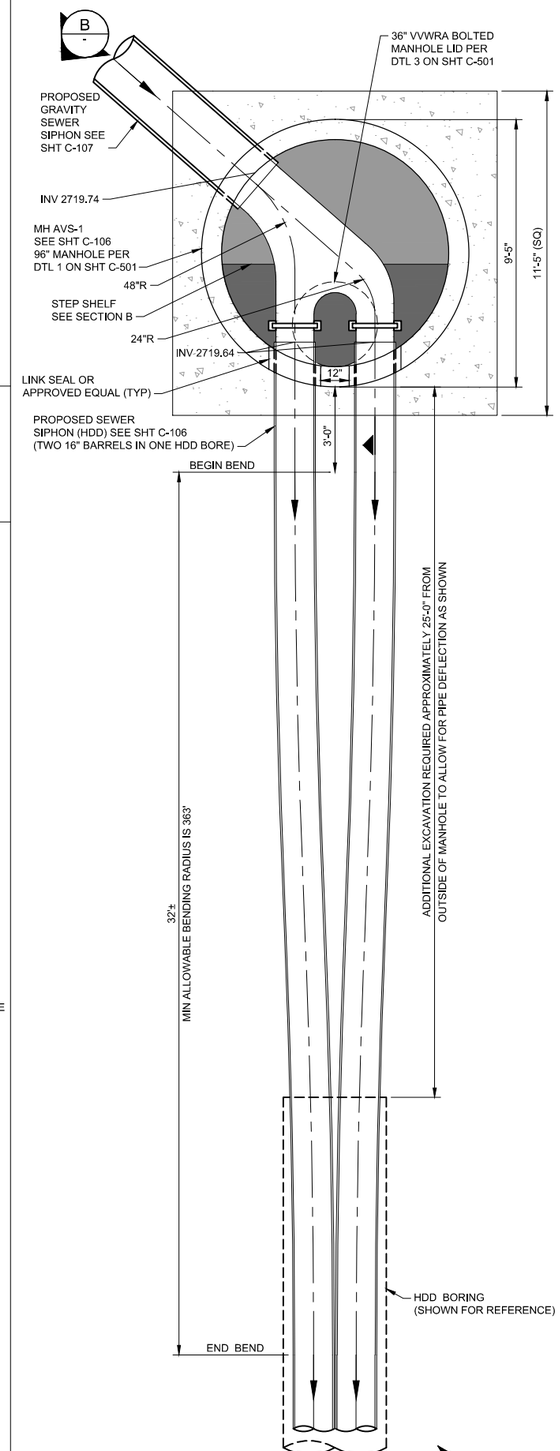

2 MH AVS-2 AT STA 217+97.04

SCALE: 3/8"=1'-0"

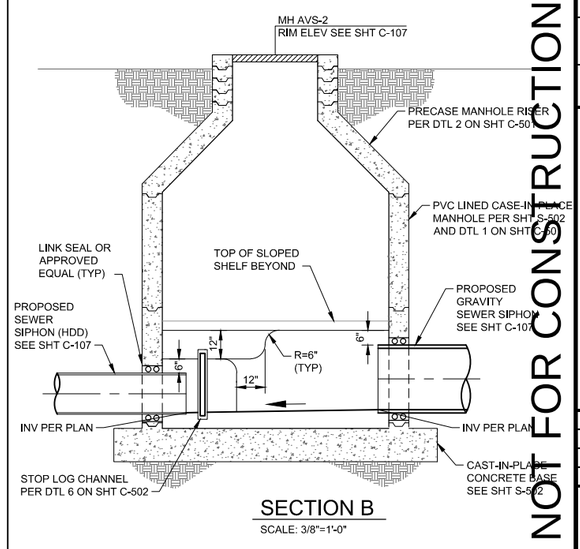

SECTION B

SCALE: 3/8"=1'-0"

NOT FOR CONSTRUCTION

TETRA TECH
www.tetratech.com
17885 Von Karman Avenue, Suite 500
Irvine, CA 92614-6213
Tel: (949) 809-5000 Fax: (949) 809-5010

VICTOR VALLEY WASTEWATER RECLAMATION AUTHORITY

MARK	DATE	DESCRIPTION	BY

VVWRA
UPPER NARROWS PIPELINE REPLACEMENT

SIPHON MANHOLE BASE DETAILS

Project No.: 135-09065-11001
Designed By:
Drawn By:
Checked By:

C-511

Copyright: Tetra Tech

Bar Measures 1 inch

10/30/2012 1:24:01 PM - P:\09065\135-09065-11001\CAD\SHEETFILES\C-511-SIPHONMANHOLEBASEDETAILS.DWG - JOHNSON, WILLIE

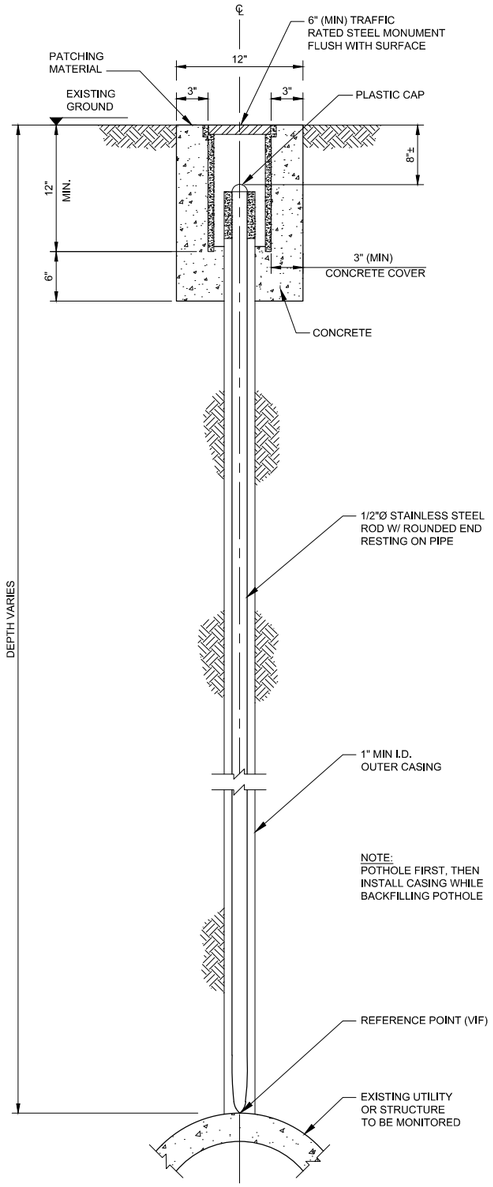

UTILITY MONITORING POINT (UMP)

1 DETAIL
SCALE: NTS

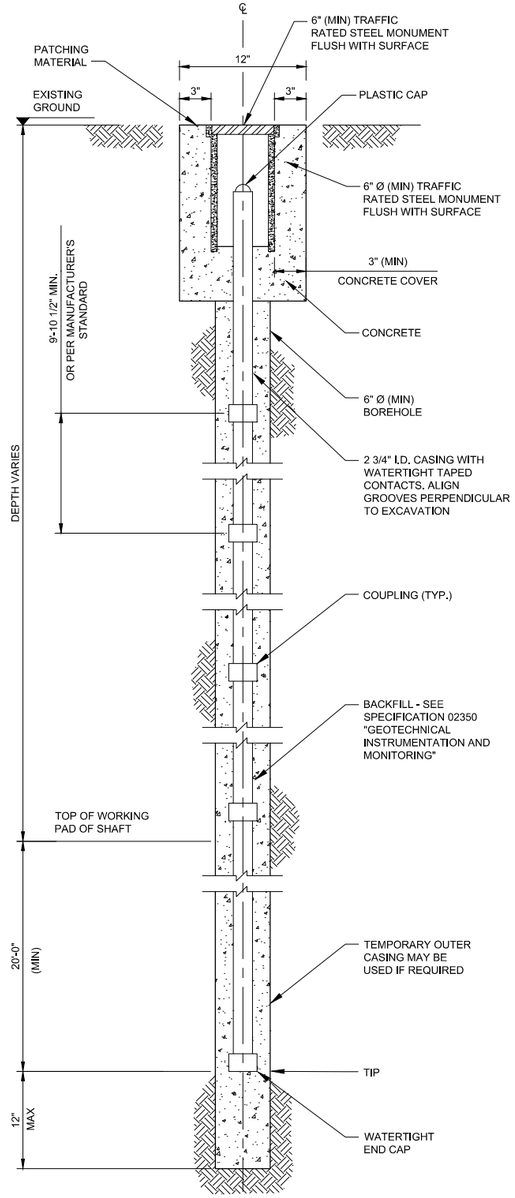

INCLINOMETER

2 DETAIL
SCALE: NTS

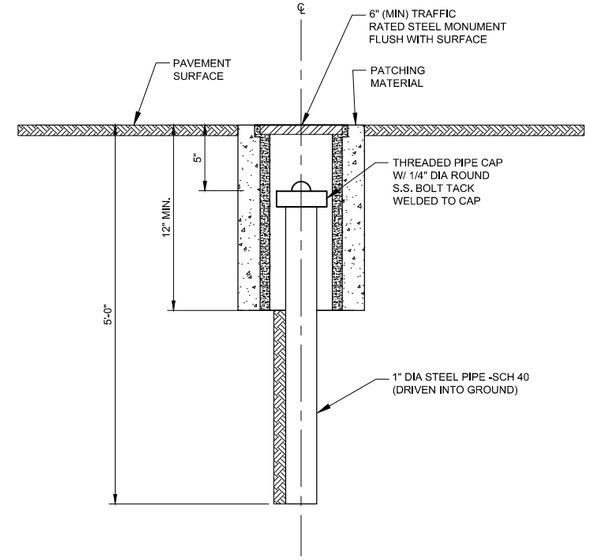

SETTLEMENT MONITORING POINT (SMP) ON GROUND SURFACE

3 DETAIL
SCALE: NTS

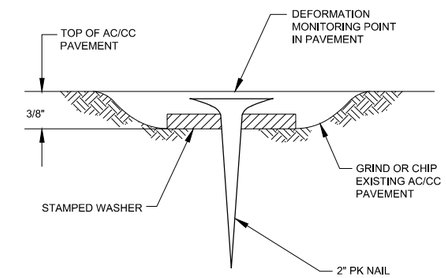

DETAIL OF PAVEMENT MONITORING POINT (PMP)

4 DETAIL
SCALE: NTS

BASELINE INSTRUMENTATION QUANTITY

INSTRUMENT	REFERENCE SHEET NUMBER			
	C-101	C-103	C-104	C-105
PMP (ea.)	0	4	1	0
SMP (ea.)	6	1	2	4
UMP (ea.)	0	1	1	0
INCLINOMETER	2	3	1	0

NOTE: INSTRUMENTATION MONITORING ME BE REALLOCATED ALONG THE MICROTUNNEL ALIGNMENT AT THE DISCRETION OF THE ENGINEER.

NOT FOR CONSTRUCTION

TETRA TECH
www.tetratech.com
17885 Von Karman Avenue, Suite 500
Irvine, CA 92614-6213
Tel: (949) 809-5000 Fax: (949) 809-5010

VICTOR VALLEY WASTEWATER RECLAMATION AUTHORITY

MARK	DATE	DESCRIPTION	BY

VVWRA
UPPER NARROWS PIPELINE REPLACEMENT
GEOTECHNICAL INSTRUMENTATION DETAILS

Project No.:	135-09065-11001
Designed By:	DLW
Drawn By:	WVPJ
Checked By:	LEB

C-512

Copyright: Tetra Tech

Bar Measures 1 inch

10/30/2012 1:24:04 PM - P:\09065\135-09065-11001\CAD\SHEETFILES\C-512-GEOTECHINSTRUMENTDETAILS.DWG - JOHNSON, WILLIE

TRAFFIC CONTROL PLAN GENERAL NOTES:

1. ALL TRAFFIC CONTROL FOR CONSTRUCTION SHALL CONFORM TO THE CALIFORNIA MANUAL ON UNIFORM TRAFFIC CONTROL DEVICES (CA MUTCD) ADOPTED 2010, CALTRANS SPECIFICATIONS AND STANDARD PLANS, DATED 2010, AND THE SPECIAL PROVISIONS.
2. LANE CLOSURES SHALL BE AS SHOWN ON THE PLANS OR AS DIRECTED BY THE ENGINEER.
3. ANY PAVEMENT MARKINGS AND STRIPING DAMAGED AND/OR BADLY WORN DURING CONSTRUCTION SHALL BE RESTORED BY THE CONTRACTOR. ALL EXISTING FACILITIES INCLUDING SIGNING, STRIPING, MARKINGS, MARKERS AND SIGNALS SHALL BE RESTORED TO THE ORIGINAL CONDITION AND/OR LOCATION AT THE END OF EACH CONSTRUCTION PERIOD FOR EACH STAGE.
4. IT IS THE RESPONSIBILITY OF THE CONTRACTOR PERFORMING WORK ON A PUBLIC STREET TO INSTALL AND MAINTAIN TRAFFIC CONTROL DEVICES AS SHOWN HEREON, AS WELL AS ANY SUCH ADDITIONAL DEVICES AS MAY BE REQUIRED TO ENSURE THE SAFE MOVEMENT OF TRAFFIC AND PEDESTRIANS THROUGH OR AROUND THE WORK AREA. ALL TRAFFIC CONTROL DEVICES SHALL BE KEPT IN THEIR PROPER POSITION AT ALL TIMES, AND SHALL BE REPAIRED OR CLEANED AS NECESSARY TO PRESERVE THEIR APPEARANCE AND CONTINUITY.
5. A MINIMUM OF TWENTY FEET OF CLEARANCE SHALL BE MAINTAINED BETWEEN ANY OPEN EXCAVATION AND THE ADJACENT MOVING TRAFFIC LANE WHERE TEMPORARY CONCRETE BARRIER IS NOT SHOWN. NO OPEN TRENCH ADJACENT TO A TRAFFIC LANE SHALL EXCEED 300 FEET. TEMPORARY CONCRETE BARRIER (TYPE K PER CALTRANS STANDARD PLAN T-3) SHALL BE USED WHENEVER SHOWN ON THE PLANS. THE C27 (CA) "OPEN TRENCH" SIGN SHALL BE UTILIZED WHENEVER AN OPEN EXCAVATION AREA EXISTS ADJACENT TO THE TRAVEL WAY.
6. THE CONTRACTOR SHALL PROVIDE A SAFE AND CONTINUOUS PASSAGE OF LOCAL PEDESTRIANS AND VEHICULAR TRAFFIC AT ALL TIMES.
7. EXACT LOCATION AND TYPE OF CONSTRUCTION SIGNS SHALL BE AS DIRECTED BY THE ENGINEER BASED ON TRAFFIC CONDITIONS.
8. CONSTRUCTION TRUCK TRAFFIC MERGING INTO TRAFFIC LANES SHALL BE BY USE OF FLAGGER AND APPROPRIATE SIGNAGE AS DIRECTED BY THE ENGINEER.
9. TRAFFIC CONES FOR NIGHTTIME USE SHALL HAVE ¾ RETROREFLECTIVE SLEEVES.
10. FOR ALL NIGHT WORK STAGES AND WHERE PRACTICAL IN ALL OTHER STAGES, CONTRACTOR SHALL REMOVE ALL TRAFFIC CONTROL AND TEMPORARY SIGNING UPON COMPLETION OF DAILY CONSTRUCTION, AND RESTORE SIGNING AND STRIPING TO CONDITIONS SHOWN AS EXISTING.
11. SEE CALTRANS STANDARD PLANS A20A THRU A20D AND A24A THRU A24E FOR STRIPING DETAILS. SEE CALTRANS STANDARD PLANS T1A, T1B, AND T2 FOR TEMPORARY CRASH CUSHION ARRAYS.
12. TRAFFIC CONTROL CHANNELIZERS SHALL BE EPOXIED TO THE PAVEMENT. TRAFFIC CONTROL CONES WITH DOUBLE BASES MAY BE USED IN LIEU OF CHANNELIZERS FOR DAILY SHORT TERM (ONE WEEK MAXIMUM) AND NIGHT WORK CONSTRUCTION ACTIVITIES.
13. FLAGGERS SHALL BE EQUIPPED WITH A WHITE HARD HAT, AN ORANGE VEST, AND A "STOP/SLOW" PADDLE ON A 5' STAFF. ADDITIONAL ADVANCED FLAGGERS SHALL BE REQUIRED WHEN TRAFFIC QUEUES DEVELOP. FLAGGER STATIONS FOR WORK AT NIGHT SHALL BE ILLUMINATED AS NOTED IN SECTION 6G.20 OF THE MUTCD.
14. A TRAFFIC CONTROL PERMIT MUST BE OBTAINED BY THE CONTRACTOR AT LEAST 48 HOURS PRIOR TO THE BEGINNING OF WORK.
15. THESE TRAFFIC CONTROL PLANS SHOW TRAFFIC CONTROL DEVICES FOR LONG TERM TRAFFIC CONTROL FOR CONSTRUCTION LIMITS SHOWN. IT IS THE CONTRACTOR'S RESPONSIBILITY TO CONFORM TO SHORT TERM TRAFFIC CONTROL REQUIREMENTS IN ACCORDANCE WITH CALTRANS "MANUAL OF UNIFORM TRAFFIC CONTROLS". SHORT TERM TRAFFIC CONTROL AND CHANGES TO THESE PLANS DURING CONSTRUCTION SHALL BE SUBMITTED FOR REVIEW AND APPROVAL BY THE CITY OF VICTORVILLE TRAFFIC ENGINEERING DIVISION.
16. USE AND PLACEMENT OF FLASHING ARROW BOARD SIGN(S) SHALL BE AS DIRECTED BY THE ENGINEER. ALL TRAFFIC TRANSITIONS SHALL UTILIZE ARROW BOARDS.
17. FLASHING BEACONS AND/OR WARNING LIGHTS SHALL BE USED WHERE DIRECTED BY THE ENGINEER.
18. CONTRACTOR MAY USE PREFABRICATED REMOVABLE DETOUR STRIPING TAPE, PAVEMENT MARKINGS AND RAISED MARKERS WHERE SHORT TERM USE WILL OCCUR (24 HOURS OR LESS), OR AS SHOWN ON THE PLANS.
19. ALL TRAFFIC SIGNAL MODIFICATION WORK SHALL CONFORM TO CALTRANS STANDARD SPECIFICATIONS AND PLANS, DATED 2010, AND THE SPECIAL PROVISIONS.
20. ALL OPEN TRENCHES SHALL BE ENCLOSED WITH PORTABLE CHAIN-LINK FENCING DURING NON-WORKING HOURS.
21. ALL CONFLICTING STRIPING, PAVEMENT MARKINGS, AND CURB PAINT SHALL BE REMOVED BY SANDBLASTING, BLACK-OUT METHOD IS NOT PERMITTED. ALL CONFLICTING RAISED PAVEMENT MARKERS SHALL BE REMOVED.
22. CONTRACTOR SHALL MAINTAIN ROADWAY SURFACE IN OPERABLE DRIVING CONDITION AT ALL TIMES. TEMPORARY A.C. PAVEMENT MAY BE REQUIRED IN ORDER TO MAINTAIN TEMPORARY LANES IN ACCEPTABLE CONDITION.
23. TYPE II BARRICADE MOUNTED FLASHING YELLOW LIGHTS SHALL BE PLACED ON TYPE II BARRICADES AT 200' SPACING AS SHOWN ON THE "TYPICAL CHANNELIZER DETAIL" OR AS DIRECTED BY THE ENGINEER.
24. CONTRACTOR SHALL REMOVE OR COVER ALL CONFLICTING SIGNS INCLUDING SIGNS ON THE TRAFFIC SIGNAL MAST ARMS.
25. ONLY ONE STAGE MAY BE DONE AT A TIME, UNLESS OTHERWISE APPROVED BY THE CITY OF VICTORVILLE. CONTRACTOR SHALL COMPLETE ONE STAGE BEFORE STARTING THE NEXT.
26. CONTRACTOR SHALL COORDINATE WITH THE CITY OF VICTORVILLE TRAFFIC ENGINEERING DEPARTMENT A MINIMUM OF FIVE (5) WORKING DAYS PRIOR TO WORK AFFECTING ANY TRAFFIC SIGNAL WITHIN CONSTRUCTION AREA. CONTACT CITY OF VICTORVILLE TRAFFIC ENGINEERING DEPARTMENT FOR TRAFFIC SIGNAL OPERATIONAL CHANGES WHEN TRAFFIC LOOPS ARE DAMAGED OR FOR TRAFFIC CONTROL CONDITIONS NOTED ON THE PLANS.
27. CONTRACTOR SHALL REPLACE ALL CONTRACTOR DAMAGED TRAFFIC FACILITIES INCLUDING, CONDUCTORS, PULL BOXES AND LOOP DETECTORS. AT LOCATIONS WHERE THE EXISTING LOOP DETECTORS WILL BE AFFECTED OR DAMAGED BY THE PROPOSED WORK, LOOPS SHALL BE REPLACED WITHIN FIVE (5) WORKING DAYS OR AS DETERMINED BY THE ENGINEER. IN LIEU OF INSTALLING TEMPORARY LOOP DETECTORS, CONTRACTOR MAY PROVIDE AND INSTALL TEMPORARY VIDEO DETECTION SYSTEM FOR THE DURATION OF CONSTRUCTION. THE VIDEO DETECTION SYSTEM SHALL BE COMPATIBLE WITH THE CITY'S TRAFFIC SIGNAL SYSTEM.

LEGEND

- SIGN
- DELINEATOR (REFLECTORIZED)
- TYPE II BARRICADE WITH SIGN
- TYPE III BARRICADE
- TYPE III BARRICADE WITH SIGN
- DIRECTION OF TRAVEL
- FLASHING ARROW BOARD
- FLAGGER STATION
- WORK AREA
- CONCRETE BARRIER RAILING (TYPE K)
- xx TEMPORARY CHAIN LINK FENCE
- (S) SIGNALIZED INTERSECTION
- (XXX) TEMPORARY TRAFFIC STRIPE DETAIL NUMBER PER CALTRANS STANDARD PLAN A20
- (R) REMOVE CONFLICTING STRIPING
- TEMPORARY CRASH CUSHION MODULE
- CHANGE OF STRIPING DETAIL
- PCMS PORTABLE CHANGEABLE MESSAGE SIGN (INSTALL ONE WEEK PRIOR TO START OF CONSTRUCTION)

SIGN CHART

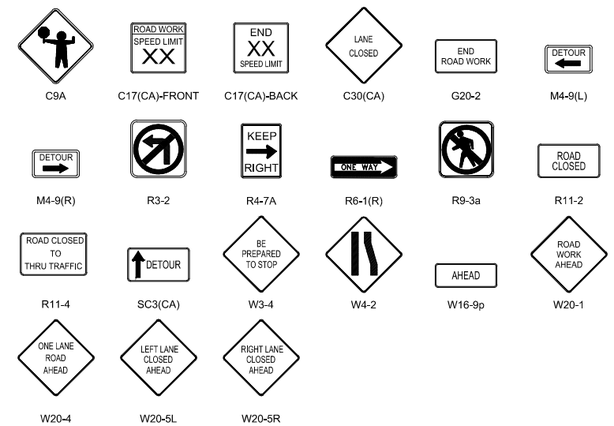

CALTRANS PERMIT NO. 08-12-N-UT-0064

NOT FOR CONSTRUCTION

TETRA TECH
www.tetratech.com
17885 Von Karman Avenue, Suite 500
Irvine, CA 92614-6213
Tel: (949) 809-5000 Fax: (949) 809-5010

VICTOR VALLEY WASTEWATER RECLAMATION AUTHORITY

MARK	DATE	DESCRIPTION	BY

VVWRA
UPPER NARROWS PIPELINE REPLACEMENT

TRAFFIC CONTROL TITLE SHEET

Project No.:	135-09065-11001
Designed By:	EPC
Drawn By:	EPC
Checked By:	MM

CT001

Bar Measures 1 inch

Copyright: Tetra Tech

10/30/2012 1:24:08 PM - P:\09065\135-09065-11001\CAD\SHEETFILES\CT001-TRAFFICCONTROLTITLE.DWG - JOHNSON, WILLIE

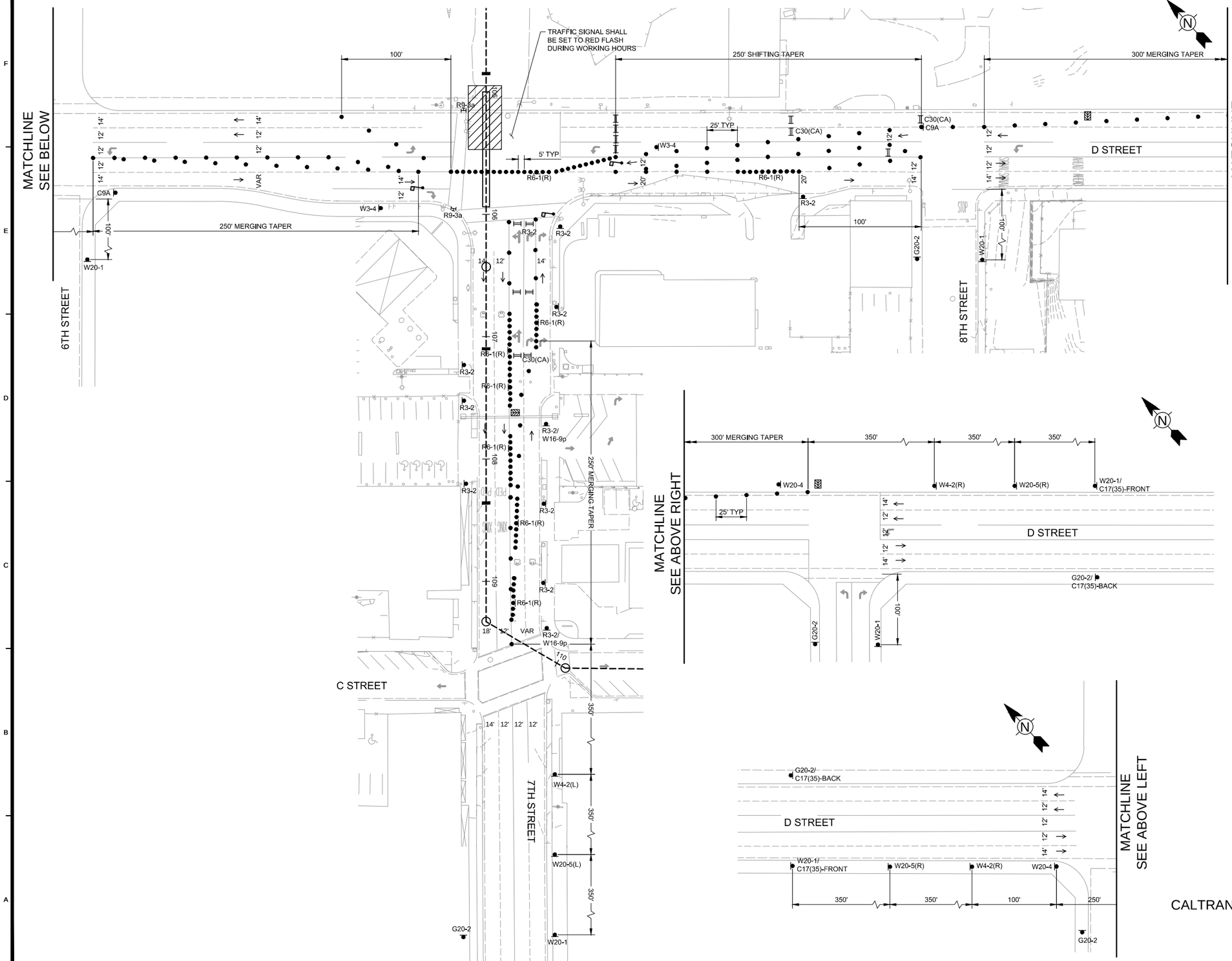

LEGEND

- SIGN
- DELINEATOR (REFLECTORIZED)
- TYPE II BARRICADE WITH SIGN
- TYPE III BARRICADE
- TYPE III BARRICADE WITH SIGN
- DIRECTION OF TRAVEL
- FLASHING ARROW BOARD
- FLAGGER STATION
- WORK AREA
- CONCRETE BARRIER RAILING (TYPE K)
- TEMPORARY CHAIN LINK FENCE
- (S) SIGNALIZED INTERSECTION
- (XXX) TEMPORARY TRAFFIC STRIPE DETAIL NUMBER PER CALTRANS STANDARD PLAN A20
- (R) REMOVE CONFLICTING STRIPING
- TEMPORARY CRASH CUSHION MODULE
- CHANGE OF STRIPING DETAIL
- PCMS PORTABLE CHANGEABLE MESSAGE SIGN (INSTALL ONE WEEK PRIOR TO START OF CONSTRUCTION)

NOTES

1. ALL WARNING SIGNS FOR NIGHT LANE CLOSURES SHALL BE ILLUMINATED OR REFLECTORIZED AS SPECIFIED IN THE SPECIFICATIONS. ALL DELINEATORS FOR NIGHT LANE CLOSURES SHALL BE EQUIPPED WITH 13" RELECTIVE SLEEVES.
2. ALL TEMPORARY TRAFFIC CONTROL DEVICES UTILITIZED FOR NIGHT WORK SHALL BE REMOVED AT THE END OF EACH WORK DAY AND EXISTING CONDITIONS SHALL BE RESTORED.
3. SEE SHEET CT110 FOR DETOUR DETAILS AND SIGNS NOT SHOWN ON THIS PLAN.

WORK HOURS
9PM TO 6AM
MONDAY THRU SUNDAY

CALTRANS PERMIT NO. 08-12-N-UT-0064

0 20' 40' 80'
SCALE: 1" = 40'

NOT FOR CONSTRUCTION

TETRA TECH
www.tetratech.com
17885 Von Karman Avenue, Suite 500
Irvine, CA 92614-6213
Tel: (949) 809-5000 Fax: (949) 809-5010

VICTOR VALLEY WASTEWATER RECLAMATION AUTHORITY

MARK	DATE	DESCRIPTION	BY

VVWRA
UPPER NARROWS PIPELINE REPLACEMENT
TRAFFIC CONTROL PLAN
STAGE 1A

Project No.:	135-09065-11001
Designed By:	EPC
Drawn By:	EPC
Checked By:	MM

CT101

Copyright: Tetra Tech

Bar Measures 1 inch

10/30/2012 1:24:17 PM - P:\09065\135-09065-11001\CAD\SHEETFILES\CT101-TRAFFICCONTROLPLAN.DWG - JOHNSON, WILLIE

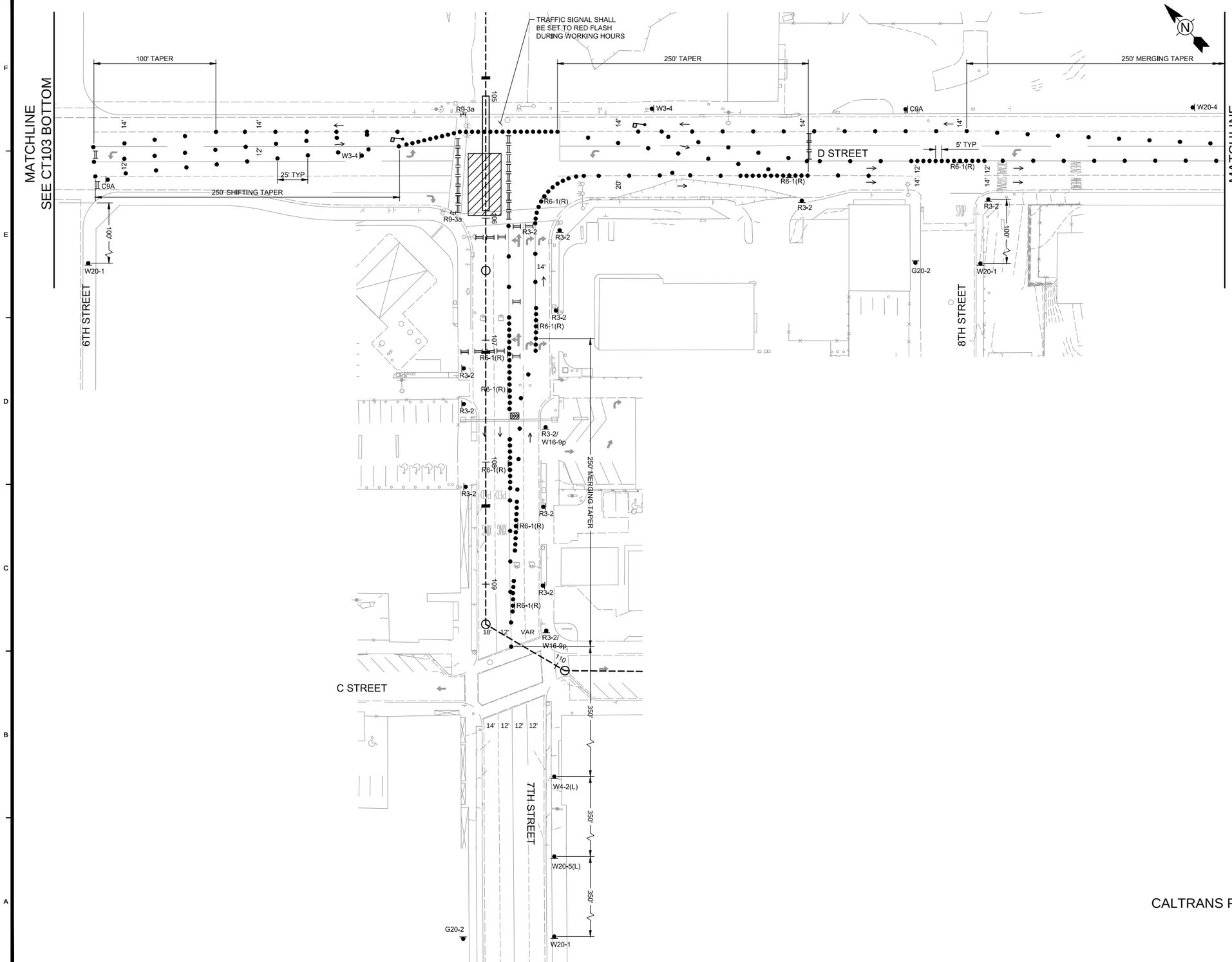

LEGEND

- SIGN
- DELINEATOR (REFLECTORIZED)
- TYPE II BARRICADE WITH SIGN
- TYPE III BARRICADE
- TYPE III BARRICADE WITH SIGN
- DIRECTION OF TRAVEL
- FLASHING ARROW BOARD
- FLAGGER STATION
- WORK AREA
- CONCRETE BARRIER RAILING (TYPE K)
- TEMPORARY CHAIN LINK FENCE
- (S) SIGNALIZED INTERSECTION
- (XXX) TEMPORARY TRAFFIC STRIPE DETAIL NUMBER PER CALTRANS STANDARD PLAN A20
- (R) REMOVE CONFLICTING STRIPING
- TEMPORARY CRASH CUSHION MODULE
- CHANGE OF STRIPING DETAIL
- PCMS PORTABLE CHANGEABLE MESSAGE SIGN (INSTALL ONE WEEK PRIOR TO START OF CONSTRUCTION)

NOTES

1. ALL WARNING SIGNS FOR NIGHT LANE CLOSURES SHALL BE ILLUMINATED OR REFLECTORIZED AS SPECIFIED IN THE SPECIFICATIONS. ALL DELINEATORS FOR NIGHT LANE CLOSURES SHALL BE EQUIPPED WITH 13" RELECTIVE SLEEVES.
2. ALL TEMPORARY TRAFFIC CONTROL DEVICES UTILITIZED FOR NIGHT WORK SHALL BE REMOVED AT THE END OF EACH WORK DAY AND EXISTING CONDITIONS SHALL BE RESTORED.
3. SEE SHEET CT110 FOR DETOUR DETAILS AND SIGNS NOT SHOWN ON THIS PLAN.

WORK HOURS
9PM TO 6AM
MONDAY THRU SUNDAY

CALTRANS PERMIT NO. 08-12-N-UT-0064

0 20' 40' 80'
SCALE: 1" = 40'

NOT FOR CONSTRUCTION

TETRA TECH
www.tetratech.com
17885 Von Karman Avenue, Suite 500
Irvine, CA 92614-6213
Tel: (949) 809-5000 Fax: (949) 809-5010

VICTOR VALLEY WASTEWATER RECLAMATION AUTHORITY

MARK	DATE	DESCRIPTION	BY

VVWRA
UPPER NARROWS PIPELINE REPLACEMENT
TRAFFICE CONTROL PLAN
STAGE 1B

Project No.:	135-09065-11001
Designed By:	EPC
Drawn By:	EPC
Checked By:	MM

CT102

Copyright: Tetra Tech

Bar Measures 1 inch

10/30/2012 1:24:23 PM - P:\09065\135-09065-11001\CAD\SHEETFILES\CT102-TRAFFICCONTROLPLAN.DWG - JOHNSON, WILLIE

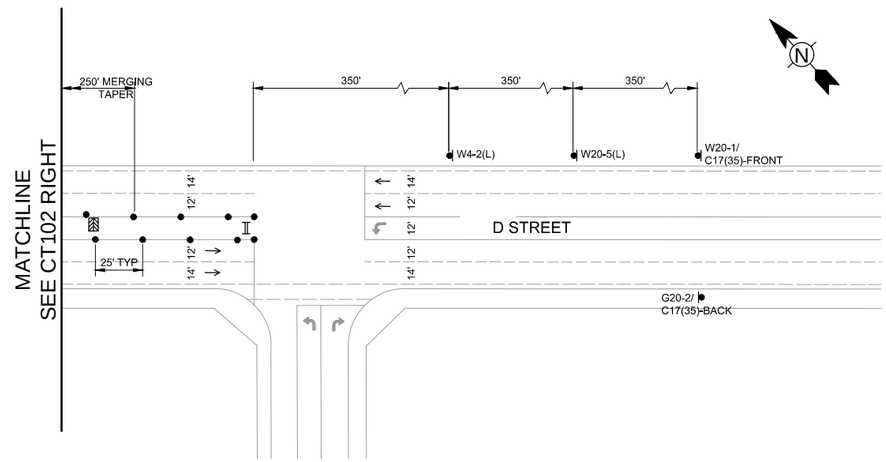

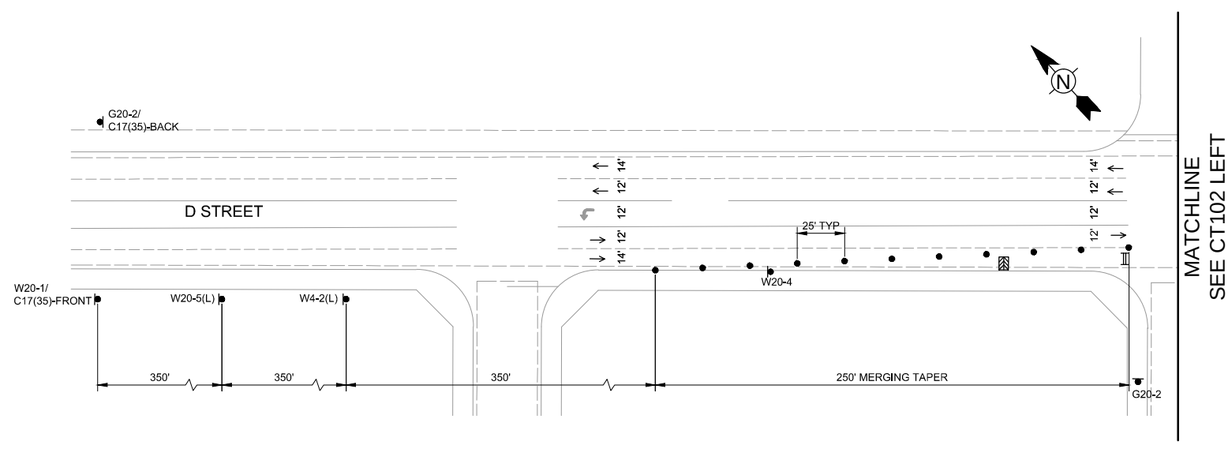

LEGEND

- SIGN
- DELINEATOR (REFLECTORIZED)
- TYPE II BARRICADE WITH SIGN
- TYPE III BARRICADE
- TYPE III BARRICADE WITH SIGN
- DIRECTION OF TRAVEL
- FLASHING ARROW BOARD
- FLAGGER STATION
- WORK AREA
- CONCRETE BARRIER RAILING (TYPE K)
- TEMPORARY CHAIN LINK FENCE
- (S) SIGNALIZED INTERSECTION
- (XXX) TEMPORARY TRAFFIC STRIPE DETAIL NUMBER PER CALTRANS STANDARD PLAN A20
- (R) REMOVE CONFLICTING STRIPING
- TEMPORARY CRASH CUSHION MODULE
- CHANGE OF STRIPING DETAIL
- PCMS PORTABLE CHANGEABLE MESSAGE SIGN (INSTALL ONE WEEK PRIOR TO START OF CONSTRUCTION)

NOTES

1. ALL WARNING SIGNS FOR NIGHT LANE CLOSURES SHALL BE ILLUMINATED OR REFLECTORIZED AS SPECIFIED IN THE SPECIFICATIONS. ALL DELINEATORS FOR NIGHT LANE CLOSURES SHALL BE EQUIPPED WITH 13" RELECTIVE SLEEVES.
2. ALL TEMPORARY TRAFFIC CONTROL DEVICES UTILITIZED FOR NIGHT WORK SHALL BE REMOVED AT THE END OF EACH WORK DAY AND EXISTING CONDITIONS SHALL BE RESTORED.
3. SEE SHEET CT110 FOR DETOUR DETAILS AND SIGNS NOT SHOWN ON THIS PLAN.

WORK HOURS
9PM TO 6AM
MONDAY THRU SUNDAY

CALTRANS PERMIT NO. 08-12-N-UT-0064

0 20' 40' 80'
SCALE: 1" = 40'

NOT FOR CONSTRUCTION

TETRA TECH
www.tetratech.com
17885 Von Karman Avenue, Suite 500
Irvine, CA 92614-6213
Tel: (949) 809-5000 Fax: (949) 809-5010

VICTOR VALLEY WASTEWATER RECLAMATION AUTHORITY

MARK	DATE	DESCRIPTION	BY

VVWRA
UPPER NARROWS PIPELINE REPLACEMENT
TRAFFIC CONTROL PLAN
STAGE 1B

Project No.:	135-09065-11001
Designed By:	EPC
Drawn By:	EPC
Checked By:	MM

CT103

Copyright: Tetra Tech

Bar Measures 1 inch

10/30/2012 1:24:31 PM - P:\09065\135-09065-11001\CAD\SHEETFILES\CT103-TRAFFICCONTROLPLAN.DWG - JOHNSON, WILLIE

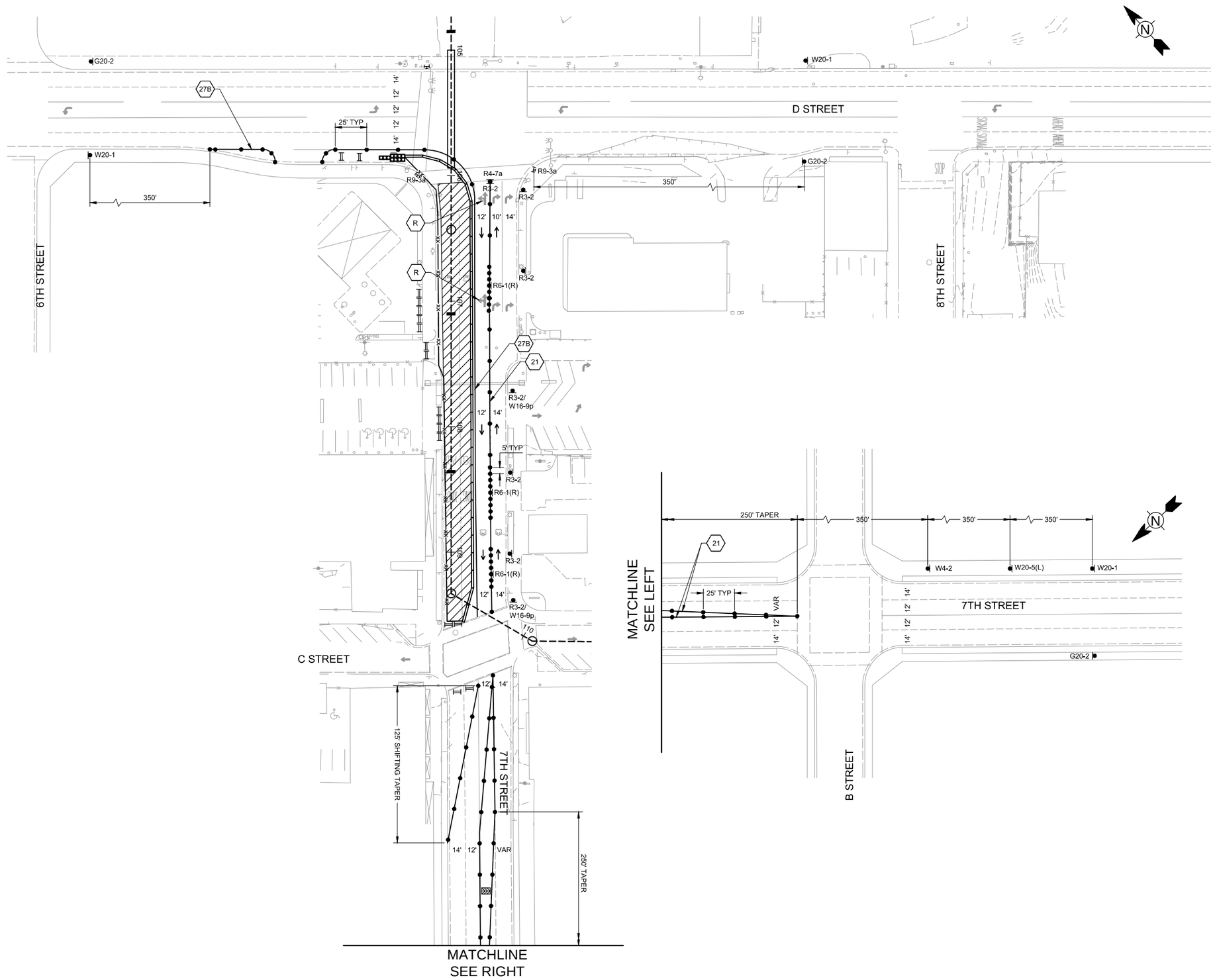

LEGEND

- SIGN
- DELINEATOR (REFLECTORIZED)
- TYPE II BARRICADE WITH SIGN
- TYPE III BARRICADE
- TYPE III BARRICADE WITH SIGN
- DIRECTION OF TRAVEL
- FLASHING ARROW BOARD
- FLAGGER STATION
- WORK AREA
- CONCRETE BARRIER RAILING (TYPE K)
- TEMPORARY CHAIN LINK FENCE
- (S) SIGNALIZED INTERSECTION
- (XXX) TEMPORARY TRAFFIC STRIPE DETAIL NUMBER PER CALTRANS STANDARD PLAN A20
- (R) REMOVE CONFLICTING STRIPING
- TEMPORARY CRASH CUSHION MODULE
- CHANGE OF STRIPING DETAIL
- PCMS PORTABLE CHANGEABLE MESSAGE SIGN (INSTALL ONE WEEK PRIOR TO START OF CONSTRUCTION)

0 20' 40' 80'
SCALE: 1" = 40'

NOT FOR CONSTRUCTION

TETRA TECH
www.tetratech.com
17885 Von Karman Avenue, Suite 500
Irvine, CA 92614-6213
Tel: (949) 809-5000 Fax: (949) 809-5010

VICTOR VALLEY WASTEWATER RECLAMATION AUTHORITY

MARK	DATE	DESCRIPTION	BY

VWWRA
UPPER NARROWS PIPELINE REPLACEMENT
TRAFFIC CONTROL PLAN
STAGE 2

Project No.:	135-09065-11001
Designed By:	EPC
Drawn By:	EPC
Checked By:	MM

CT104

Copyright: Tetra Tech

Bar Measures 1 inch

10/30/2012 1:24:38 PM - P:\09065\135-09065-11001\CAD\SHEETFILES\CT104-TRAFFICCONTROLPLAN.DWG - JOHNSON, WILLIE

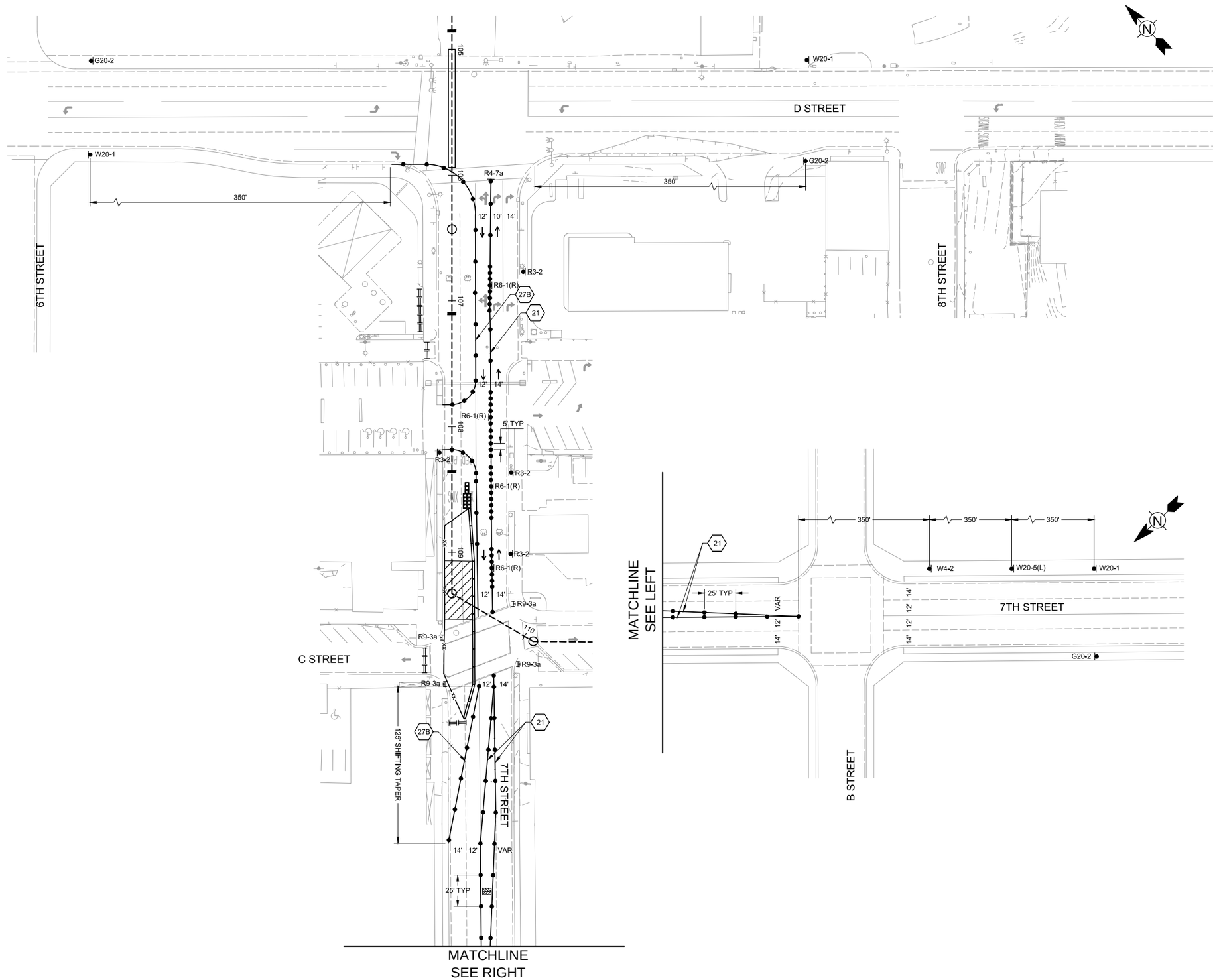

LEGEND

- SIGN
- DELINEATOR (REFLECTORIZED)
- TYPE II BARRICADE WITH SIGN
- TYPE III BARRICADE
- TYPE III BARRICADE WITH SIGN
- DIRECTION OF TRAVEL
- FLASHING ARROW BOARD
- FLAGGER STATION
- WORK AREA
- CONCRETE BARRIER RAILING (TYPE K)
- TEMPORARY CHAIN LINK FENCE
- (S) SIGNALIZED INTERSECTION
- (XXX) TEMPORARY TRAFFIC STRIPE DETAIL NUMBER PER CALTRANS STANDARD PLAN A20
- (R) REMOVE CONFLICTING STRIPING
- TEMPORARY CRASH CUSHION MODULE
- CHANGE OF STRIPING DETAIL
- PCMS — PORTABLE CHANGEABLE MESSAGE SIGN (INSTALL ONE WEEK PRIOR TO START OF CONSTRUCTION)

0 20' 40' 80'
SCALE: 1" = 40'

NOT FOR CONSTRUCTION

TETRA TECH
www.tetratech.com
17885 Von Karman Avenue, Suite 500
Irvine, CA 92614-6213
Tel: (949) 809-5000 Fax: (949) 809-5010

VICTOR VALLEY WASTEWATER RECLAMATION AUTHORITY

MARK	DATE	DESCRIPTION	BY

VVWRA
UPPER NARROWS PIPELINE REPLACEMENT
TRAFFIC CONTROL PLAN
STAGE 3A

Project No.:	135-09065-11001
Designed By:	EPC
Drawn By:	EPC
Checked By:	MM

CT105

Copyright: Tetra Tech

Bar Measures 1 inch

10/30/2012 1:24:45 PM - P:\09065\135-09065-11001\CAD\SHEETFILES\CT105-TRAFFICCONTROLPLAN.DWG - JOHNSON, WILLIE

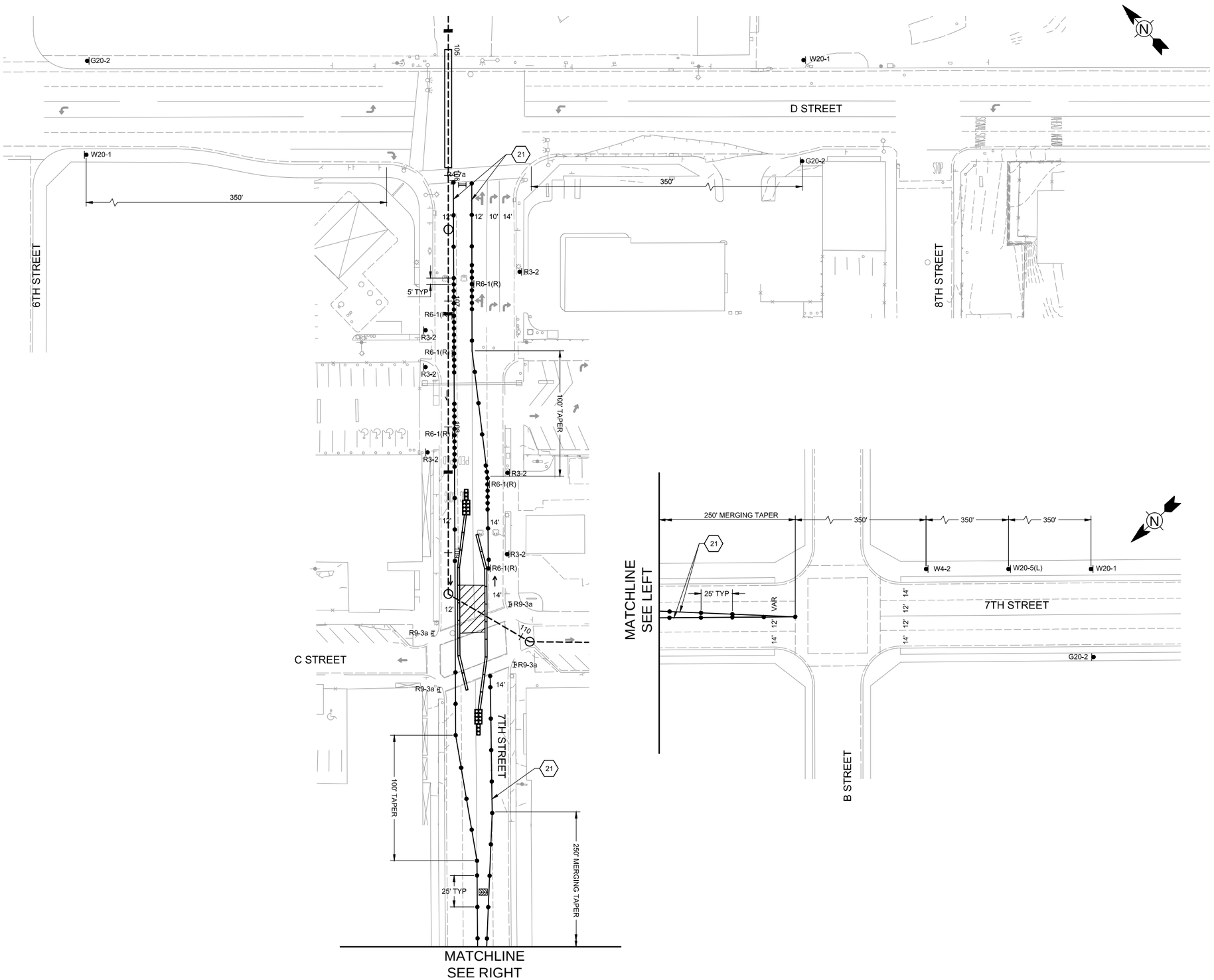

LEGEND

- SIGN
- DELINEATOR (REFLECTORIZED)
- TYPE II BARRICADE WITH SIGN
- TYPE III BARRICADE
- TYPE III BARRICADE WITH SIGN
- DIRECTION OF TRAVEL
- FLASHING ARROW BOARD
- FLAGGER STATION
- WORK AREA
- CONCRETE BARRIER RAILING (TYPE K)
- TEMPORARY CHAIN LINK FENCE
- (S) SIGNALIZED INTERSECTION
- (XXX) TEMPORARY TRAFFIC STRIPE DETAIL NUMBER PER CALTRANS STANDARD PLAN A20
- (R) REMOVE CONFLICTING STRIPING
- TEMPORARY CRASH CUSHION MODULE
- CHANGE OF STRIPING DETAIL
- PCMS PORTABLE CHANGEABLE MESSAGE SIGN (INSTALL ONE WEEK PRIOR TO START OF CONSTRUCTION)

0 20' 40' 80'
SCALE: 1" = 40'

NOT FOR CONSTRUCTION

TETRA TECH
www.tetratech.com
17885 Von Karman Avenue, Suite 500
Irvine, CA 92614-6213
Tel: (949) 809-5000 Fax: (949) 809-5010

VICTOR VALLEY WASTEWATER RECLAMATION AUTHORITY

MARK	DATE	DESCRIPTION	BY

VVWRA
UPPER NARROWS PIPELINE REPLACEMENT
TRAFFIC CONTROL PLAN
STAGE 3B

Project No.:	135-09065-11001
Designed By:	EPC
Drawn By:	EPC
Checked By:	MM

CT106

Bar Measures 1 inch

Copyright: Tetra Tech

10/30/2012 1:24:52 PM - P:\09065\135-09065-11001\CAD\SHEETFILES\CT106-TRAFFICCONTROLPLAN.DWG - JOHNSON, WILLIE

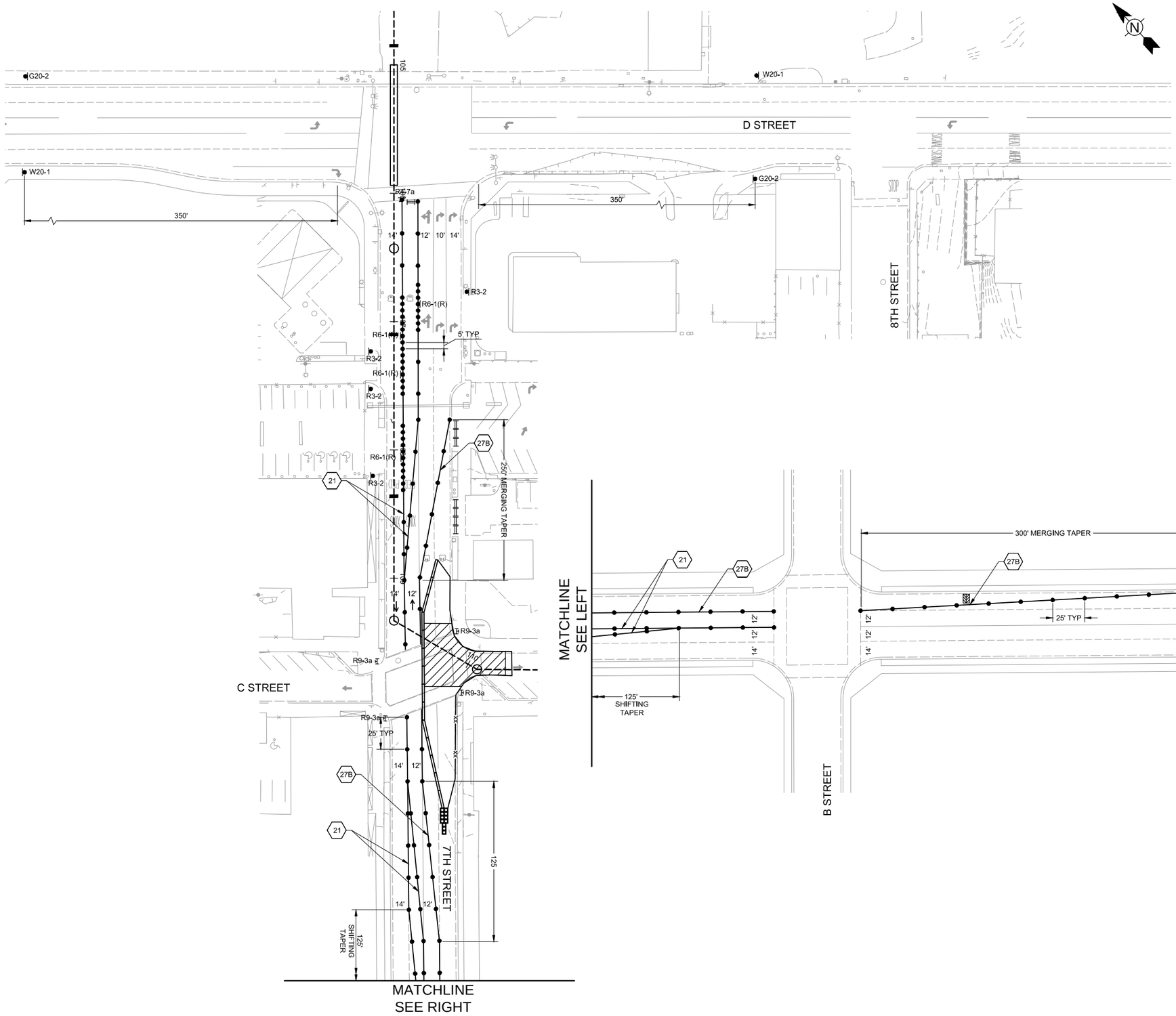

LEGEND

- SIGN
- DELINEATOR (REFLECTORIZED)
- TYPE II BARRICADE WITH SIGN
- TYPE III BARRICADE
- TYPE III BARRICADE WITH SIGN
- DIRECTION OF TRAVEL
- FLASHING ARROW BOARD
- FLAGGER STATION
- WORK AREA
- CONCRETE BARRIER RAILING (TYPE K)
- TEMPORARY CHAIN LINK FENCE
- (S) SIGNALIZED INTERSECTION
- (XXX) TEMPORARY TRAFFIC STRIPE DETAIL NUMBER PER CALTRANS STANDARD PLAN A20
- (R) REMOVE CONFLICTING STRIPING
- TEMPORARY CRASH CUSHION MODULE
- CHANGE OF STRIPING DETAIL
- PCMS PORTABLE CHANGEABLE MESSAGE SIGN (INSTALL ONE WEEK PRIOR TO START OF CONSTRUCTION)

SCALE: 1" = 40'

NOT FOR CONSTRUCTION

TETRA TECH
www.tetratech.com
17885 Von Karman Avenue, Suite 500
Irvine, CA 92614-6213
Tel: (949) 809-5000 Fax: (949) 809-5010

VICTOR VALLEY WASTEWATER RECLAMATION AUTHORITY

MARK	DATE	DESCRIPTION	BY

VVWRA
UPPER NARROWS PIPELINE REPLACEMENT
TRAFFIC CONTROL PLAN
STAGE 3C

Project No.:	135-09065-11001
Designed By:	EPC
Drawn By:	EPC
Checked By:	MM

CT107

Copyright: Tetra Tech

Bar Measures 1 inch

10/30/2012 1:25:00 PM - P:\09065\135-09065-11001\CAD\SHEETFILES\CT107-TRAFFICCONTROLPLAN.DWG - JOHNSON, WILLIE

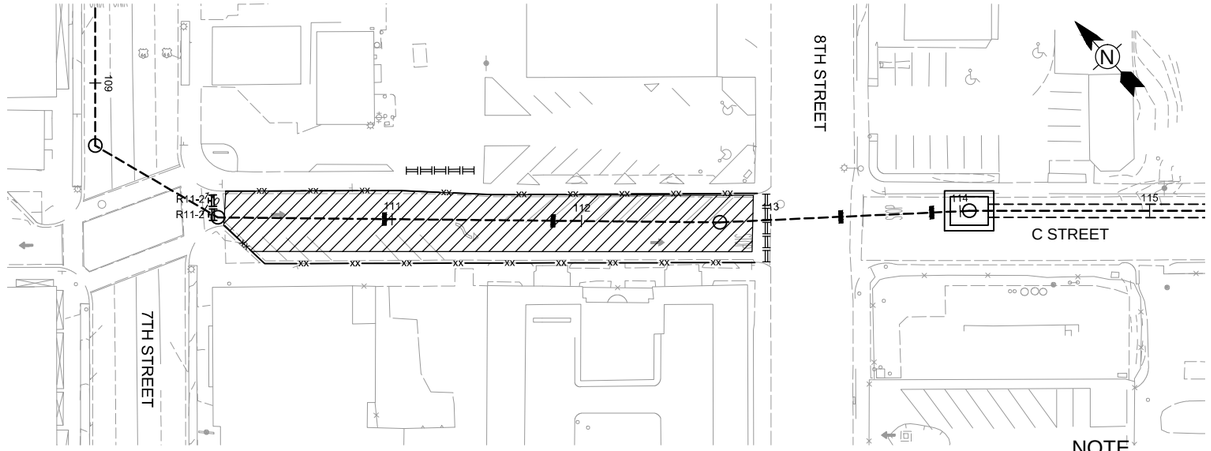

1 STAGE 4
1" = 40'

NOTE
SEE SHEET CT111 FOR DETOUR DETAILS AND SIGNS NOT SHOWN ON THIS PLAN.

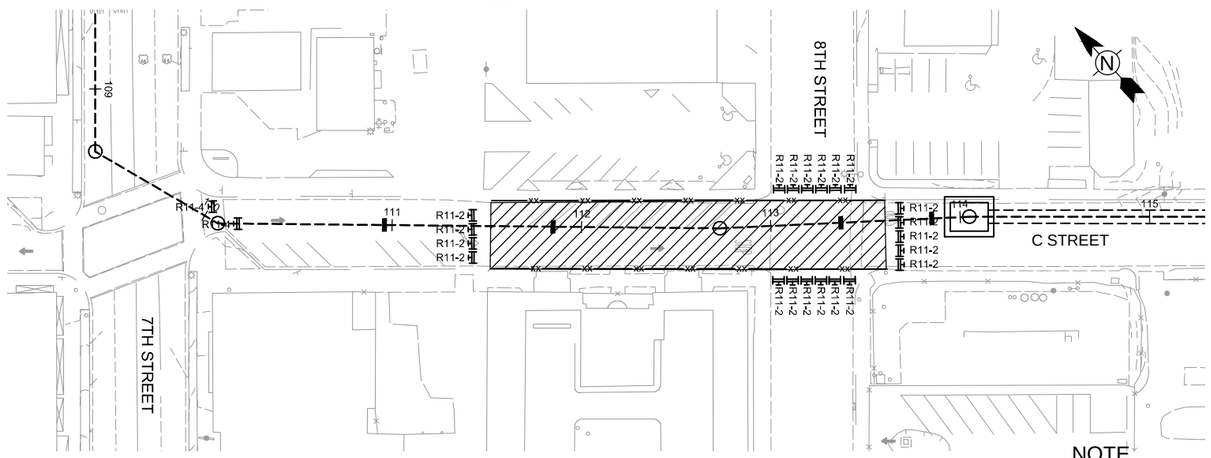

1 STAGE 5
1" = 40'

NOTE
SEE SHEET CT112 FOR DETOUR DETAILS AND SIGNS NOT SHOWN ON THIS PLAN.

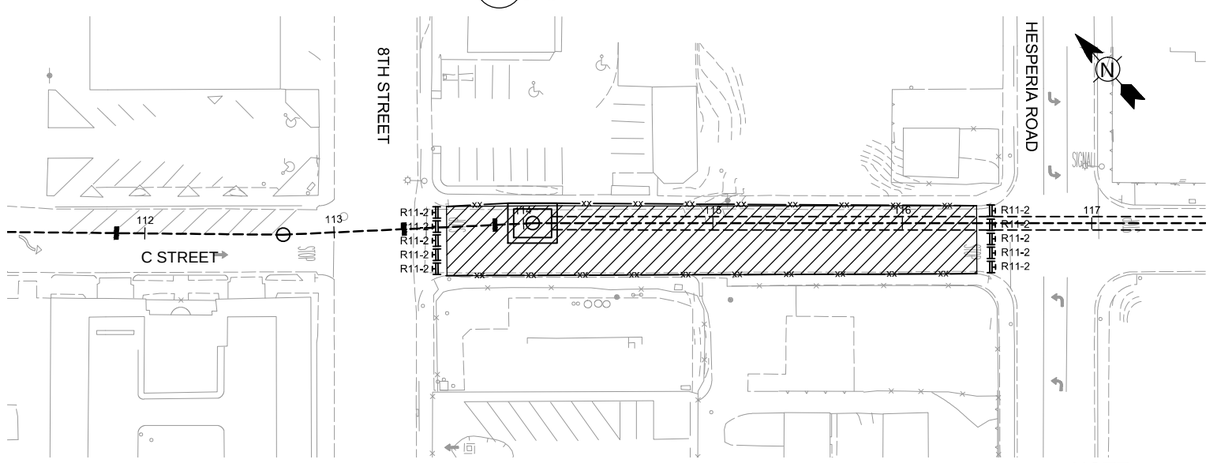

1 STAGE 6
1" = 40'

NOTE
SEE SHEET CT113 FOR DETOUR DETAILS AND SIGNS NOT SHOWN ON THIS PLAN.

LEGEND

- SIGN
- DELINEATOR (REFLECTORIZED)
- TYPE II BARRICADE WITH SIGN
- TYPE III BARRICADE
- TYPE III BARRICADE WITH SIGN
- DIRECTION OF TRAVEL
- FLASHING ARROW BOARD
- FLAGGER STATION
- WORK AREA
- CONCRETE BARRIER RAILING (TYPE K)
- TEMPORARY CHAIN LINK FENCE
- (S) SIGNALIZED INTERSECTION
- (XXX) TEMPORARY TRAFFIC STRIPE DETAIL NUMBER PER CALTRANS STANDARD PLAN A20
- (R) REMOVE CONFLICTING STRIPING
- TEMPORARY CRASH CUSHION MODULE
- CHANGE OF STRIPING DETAIL
- PCMS PORTABLE CHANGEABLE MESSAGE SIGN (INSTALL ONE WEEK PRIOR TO START OF CONSTRUCTION)

0 20' 40' 80'
SCALE: 1" = 40'

NOT FOR CONSTRUCTION

TETRA TECH
www.tetratech.com
17885 Von Karman Avenue, Suite 500
Irvine, CA 92614-6213
Tel: (949) 809-5000 Fax: (949) 809-5010

VICTOR VALLEY WASTEWATER RECLAMATION AUTHORITY

MARK	DATE	DESCRIPTION

VVWRA
UPPER NARROWS PIPELINE REPLACEMENT

TRAFFIC CONTROL PLAN
STAGES 4, 5, AND 6

Project No.:	135-09065-11001
Designed By:	EPC
Drawn By:	EPC
Checked By:	MM

CT108

Copyright: Tetra Tech

Bar Measures 1 inch

10/30/2012 1:25:08 PM - P:\09065\135-09065-11001\CAD\SHEETFILES\CT108-TRAFFICCONTROLPLAN.DWG - JOHNSON, WILLIE

[TRAFFIC CONTROL PLAN

LEGEND

- SIGN
- DELINEATOR (REFLECTORIZED)
- TYPE II BARRICADE WITH SIGN
- TYPE III BARRICADE
- TYPE III BARRICADE WITH SIGN
- DIRECTION OF TRAVEL
- FLASHING ARROW BOARD
- FLAGGER STATION
- WORK AREA
- CONCRETE BARRIER RAILING (TYPE K)
- xx TEMPORARY CHAIN LINK FENCE
- (S) SIGNALIZED INTERSECTION
- (XXX) TEMPORARY TRAFFIC STRIPE DETAIL NUMBER PER CALTRANS STANDARD PLAN A20
- (R) REMOVE CONFLICTING STRIPING
- TEMPORARY CRASH CUSHION MODULE
- CHANGE OF STRIPING DETAIL
- PCMS PORTABLE CHANGEABLE MESSAGE SIGN (INSTALL ONE WEEK PRIOR TO START OF CONSTRUCTION)

PCMS MESSAGE

PCMS-1	FRAME 1	CONSTRUCTION AT 7TH STREET
	FRAME 2	USE ALT. ROUTE
PCMS-2	FRAME 1	CONSTRUCTION AT D STREET
	FRAME 2	USE ALT. ROUTE

N
NTS

CALTRANS PERMIT NO. 08-12-N-UT-0064

NOT FOR CONSTRUCTION

TETRA TECH
www.tetratech.com
17885 Von Karman Avenue, Suite 500
Irvine, CA 92614-6213
Tel: (949) 809-5000 Fax: (949) 809-5010

VICTOR VALLEY WASTEWATER RECLAMATION AUTHORITY

MARK	DATE	DESCRIPTION	BY

VVWRA
UPPER NARROWS PIPELINE REPLACEMENT
TRAFFIC CONTROL DETOUR
STAGE 1 DETOUR PLAN

Project No.:	135-09065-11001
Designed By:	EPC
Drawn By:	EPC
Checked By:	MM

CT109

Copyright: Tetra Tech

Bar Measures 1 inch

10/30/2012 1:25:14 PM - P:\09065\135-09065-11001\CAD\SHEETFILES\CT109-TRAFFICCONTROLDETOUR.DWG - JOHNSON, WILLIE

LEGEND

- SIGN
- DELINEATOR (REFLECTORIZED)
- TYPE II BARRICADE WITH SIGN
- TYPE III BARRICADE
- TYPE III BARRICADE WITH SIGN
- DIRECTION OF TRAVEL
- FLASHING ARROW BOARD
- FLAGGER STATION
- WORK AREA
- CONCRETE BARRIER RAILING (TYPE K)
- TEMPORARY CHAIN LINK FENCE
- (S) SIGNALIZED INTERSECTION
- (XXX) TEMPORARY TRAFFIC STRIPE DETAIL NUMBER PER CALTRANS STANDARD PLAN A20
- (R) REMOVE CONFLICTING STRIPING
- TEMPORARY CRASH CUSHION MODULE
- CHANGE OF STRIPING DETAIL
- PCMS — PORTABLE CHANGEABLE MESSAGE SIGN (INSTALL ONE WEEK PRIOR TO START OF CONSTRUCTION)

PCMS MESSAGE

PCMS-3	FRAME 1	C STREET CLOSED
	FRAME 2	BETWEEN 7TH STREET & 8TH STREET
	FRAME 3	USE ALT. ROUTE

NTS

NOT FOR CONSTRUCTION

TETRA TECH
www.tetratech.com
17885 Von Karman Avenue, Suite 500
Irvine, CA 92614-6213
Tel: (949) 809-5000 Fax: (949) 809-5010

VICTOR VALLEY WASTEWATER RECLAMATION AUTHORITY

MARK	DATE	DESCRIPTION	BY

VVWRA
UPPER NARROWS PIPELINE REPLACEMENT
TRAFFIC CONTROL DETOUR
STAGE 4 DETOUR PLAN

Project No.:	135-09065-11001
Designed By:	EPC
Drawn By:	EPC
Checked By:	MM

CT110

Copyright: Tetra Tech

Bar Measures 1 inch

10/30/2012 1:25:19 PM - P:\09065\135-09065-11001\CAD\SHEETFILES\CT110-TRAFFICCONTROLDETOUR.DWG - JOHNSON, WILLIE

LEGEND

- SIGN
- DELINEATOR (REFLECTORIZED)
- TYPE II BARRICADE WITH SIGN
- TYPE III BARRICADE
- TYPE III BARRICADE WITH SIGN
- DIRECTION OF TRAVEL
- FLASHING ARROW BOARD
- FLAGGER STATION
- WORK AREA
- CONCRETE BARRIER RAILING (TYPE K)
- —XX— TEMPORARY CHAIN LINK FENCE
- (S) SIGNALIZED INTERSECTION
- (XXX) TEMPORARY TRAFFIC STRIPE DETAIL NUMBER PER CALTRANS STANDARD PLAN A20
- (R) REMOVE CONFLICTING STRIPING
- TEMPORARY CRASH CUSHION MODULE
- CHANGE OF STRIPING DETAIL
- PCMS PORTABLE CHANGEABLE MESSAGE SIGN (INSTALL ONE WEEK PRIOR TO START OF CONSTRUCTION)

N
NTS

NOT FOR CONSTRUCTION

TETRA TECH
www.tetratech.com
17885 Von Karman Avenue, Suite 500
Irvine, CA 92614-6213
Tel: (949) 809-5000 Fax: (949) 809-5010

VICTOR VALLEY WASTEWATER RECLAMATION AUTHORITY

MARK	DATE	DESCRIPTION	BY

VVWRA
UPPER NARROWS PIPELINE REPLACEMENT
TRAFFIC CONTROL DETOUR
STAGE 5 DETOUR PLAN

Project No.:	135-09065-11001
Designed By:	EPC
Drawn By:	EPC
Checked By:	MM

CT111

Copyright: Tetra Tech

Bar Measures 1 inch

10/30/2012 1:25:25 PM - P:\09065\135-09065-11001\CAD\SHEETFILES\CT111-TRAFFICCONTROLDETOUR.DWG - JOHNSON, WILLIE

LEGEND

- SIGN
- DELINEATOR (REFLECTORIZED)
- TYPE II BARRICADE WITH SIGN
- TYPE III BARRICADE
- TYPE III BARRICADE WITH SIGN
- DIRECTION OF TRAVEL
- FLASHING ARROW BOARD
- FLAGGER STATION
- WORK AREA
- CONCRETE BARRIER RAILING (TYPE K)
- —xx— TEMPORARY CHAIN LINK FENCE
- (S) SIGNALIZED INTERSECTION
- (XXX) TEMPORARY TRAFFIC STRIPE DETAIL NUMBER PER CALTRANS STANDARD PLAN A20
- (R) REMOVE CONFLICTING STRIPING
- TEMPORARY CRASH CUSHION MODULE
- CHANGE OF STRIPING DETAIL
- PCMS PORTABLE CHANGEABLE MESSAGE SIGN (INSTALL ONE WEEK PRIOR TO START OF CONSTRUCTION)

N
NTS

NOT FOR CONSTRUCTION

TETRA TECH
www.tetratech.com
17885 Von Karman Avenue, Suite 500
Irvine, CA 92614-6213
Tel: (949) 809-5000 Fax: (949) 809-5010

VICTOR VALLEY WASTEWATER RECLAMATION AUTHORITY

MARK	DATE	DESCRIPTION	BY

VVWRA
UPPER NARROWS PIPELINE REPLACEMENT
TRAFFIC CONTROL DETOUR
STAGE 6 DETOUR PLAN

Project No.:	135-09065-11001
Designed By:	EPC
Drawn By:	EPC
Checked By:	MM

CT112

Bar Measures 1 inch

Copyright: Tetra Tech

10/30/2012 1:25:31 PM - P:\09065\135-09065-11001\CAD\SHEETFILES\CT112-TRAFFICCONTROLDETOUR.DWG - JOHNSON, WILLIE

GENERAL STRUCTURAL NOTES

THESE NOTES SHALL APPLY UNLESS SHOWN/INDICATED OTHERWISE ELSEWHERE IN THE STRUCTURAL DRAWINGS.

GENERAL

1. ALL CONCRETE DESIGN SHALL CONFORM TO ACI 350-06 AND ALL MATERIALS AND CONSTRUCTION SHALL CONFORM THE PROJECT SPECIFICATIONS, UNLESS NOTED OTHERWISE.
2. CONTRACTOR SHALL FIELD VERIFY ALL EXISTING CONDITIONS AND DIMENSIONS BEFORE STARTING WORK. SHOULD CONDITIONS EXIST WHICH ARE CONTRARY TO THOSE SHOWN ON PLANS, THE ENGINEER SHALL BE NOTIFIED IN WRITING BEFORE PROCEEDING WITH WORK.
3. IT SHALL BE THE RESPONSIBILITY OF THE CONTRACTOR TO ENSURE THAT ALL WALLS, SLABS, ETC. ARE ADEQUATELY BRACED AND SHORED DURING CONSTRUCTION. ALL BRACING/SHORING SHALL BE DESIGNED BY A CALIFORNIA REGISTERED CIVIL OR STRUCTURAL ENGINEER HIRED BY THE CONTRACTOR. BRACING OF CONCRETE ROOF SLABS SHALL REMAIN IN PLACE UNTIL ROOF SLAB IS INSTALLED AND COMPLETELY CURED.
4. UNLESS DETAILED, SPECIFIED, OR INDICATED OTHERWISE, CONSTRUCTION SHALL BE AS INDICATED IN THE APPLICABLE TYPICAL STRUCTURAL DETAILS AND THESE GENERAL NOTES. THE TYPICAL STRUCTURAL DETAILS ARE MEANT TO APPLY EVEN THOUGH NOT REFERENCED AT SPECIFIC LOCATIONS ON DRAWINGS WHERE THEY OCCUR.
5. THE CONTRACT DRAWINGS AND SPECIFICATIONS REPRESENT THE FINISHED STRUCTURE. THEY DO NOT INDICATE THE METHOD OF CONSTRUCTION. THE CONTRACTOR SHALL PROVIDE ALL MEASURES NECESSARY TO PROTECT THE STRUCTURE, WORKERS AND PEDESTRIANS DURING CONSTRUCTION. SUCH MEASURES SHALL INCLUDE, BUT NOT BE LIMITED TO BRACING, SHORING FOR LOADS DUE TO CONSTRUCTION EQUIPMENT, TEMPORARY STRUCTURES, AND PARTIALLY COMPLETED WORK, ETC. OBSERVATION VISITS TO THE SITE BY THE ENGINEER SHALL NOT BE CONSIDERED AS INSPECTION OF SUCH ITEMS.
6. DIMENSIONS SHALL TAKE PRECEDENCE OVER SCALES SHOWN ON DRAWINGS.
7. ALL WORK SHALL CONFORM TO THE PLANS AND SPECIFICATIONS IN ALL RESPECTS AND SHALL BE SUBJECT TO APPROVAL BY THE ENGINEER.
8. SOIL PROPERTIES, ALLOWABLE DESIGN VALUES, GRADING AND COMPACTION REQUIREMENTS AS PER LEIGHTON CONSULTING, INC.'S GEOTECHNICAL EXPLORATION VICTOR VALLEY WATER RECLAMATION AUTHORITY (VVWRA) UPPER NARROWS SEWER PIPELINE REPLACEMENT ALTERNATIVE 2 ALIGNMENT DATED NOVEMBER 2011 PROJECT NO 603226.001.
9. CONTRACTOR SHALL VERIFY LOCATION OF ALL SITE UTILITIES PRIOR TO STARTING WORK, BOTH ABOVE GROUND AND BELOW GROUND, WHICH MAY BE IMPACTED BY THE WORK SHOWN ON THESE DRAWINGS. ANY CONFLICTS SHALL BE BROUGHT TO THE ATTENTION OF THE ENGINEER.
10. ALL ITEMS SHOWN ON THESE PLANS ARE NEW UNLESS NOTED (E), EXIST. OR EXISTING.
11. WELL POINT DEWATERING SHALL OCCUR AT EXCAVATIONS ANTICIPATED BELOW GROUNDWATER. GROUNDWATER LEVELS SHALL BE DEWATERED TO A MINIMUM 2-FT BELOW BOTTOM OF EXCAVATION PRIOR TO EXCAVATION OF THE LOWER MOST LEVEL.

REINFORCING NOTES

1. REINFORCEMENT FOR CONCRETE SHALL BE DEFORMED BARS CONFORMING TO A.S.T.M. SPECIFICATION A615 (A706/A706M FOR WELDED REINFORCING). GRADE 60 STEEL SHALL BE USED EXCEPT THAT #3 BARS AND SMALLER MAY BE GRADE 40 STEEL.
2. ALL REINFORCEMENT, ANCHOR BOLTS, AND OTHER ANCHORAGES PLACED IN CONCRETE SHALL BE ACCURATELY PLACED AND POSITIVELY SECURED AND SUPPORTED BY CONCRETE BLOCKS, METAL CHAIRS, SPACERS, OR METAL HANGERS, AND SHALL BE IN POSITION BEFORE CONCRETE PLACING OR GROUTING IS BEGUN. DETAILING AND PLACING OF BARS SHALL CONFORM TO THE A.C.I. MANUAL OF STANDARD PRACTICES.
3. BARS SPECIFIED AS "CONTINUOUS" SHALL EXTEND THE FULL LENGTH OF THE MEMBER CONTAINING THEM AND MAY BE SPLICED (UNLESS NOTED OR SHOWN WITHOUT SPLICES ON THE PLANS) BY LAPPING BARS PER DETAIL 2 ON SHEET S-501. STAGGER ALL SPLICES.
4. DOWELS SHALL BE PROVIDED AT ALL POUR JOINTS AND SHALL BE THE SAME SIZE AND SPACING AS REINFORCING DIRECTLY BEYOND POUR JOINTS. PROVIDE LAP PER DETAIL 2 ON SHEET S-501
5. WELDING OF REINFORCING STEEL, METAL INSERTS AND CONNECTIONS IN REINFORCED CONCRETE CONSTRUCTION SHALL CONFORM TO ANSI/AUS 1.4-05, USE LOW HYDROGEN E-70 SERIES ELECTRODES FOR WELDING OF REINFORCING BARS. CONTINUOUS INSPECTION IS REQUIRED OF ALL FIELD WELDING IN ACCORDANCE WITH C.B.C. CHAPTER 17
6. THE SPECIFIED DIMENSIONS OF THE VERTICAL LEGS OF "L" DOWELS, WHOSE HORIZONTAL LEGS ARE CAST INTO A FOOTING OR SLAB CAST ON TOP OF EARTH, ARE BASED UPON THE SLAB THICKNESS AS SHOWN ON THE DRAWINGS. IF A SLAB IS POURED THICKER THAN SHOWN ON THE DRAWINGS, SUCH AS FOR THE SUBGRADE OCCURRING AT A LOWER ELEVATION THAN SHOWN, THE VERTICAL LEGS MUST BE FABRICATED TO A LONGER LENGTH OR THE HORIZONTAL TAILS MUST BE SUPPORTED ABOVE SUBGRADE HIGH ENOUGH TO PROVIDE THE SAME AMOUNT OF LAP LENGTH BETWEEN THE DOWEL AND THE WALL VERTICAL REINFORCING.

CONCRETE NOTES

1. ALL CONCRETE SHALL CONFORM TO CLASS "A" CONCRETE, 4000 PSI COMPRESSIVE STRENGTH AT 28 DAYS, IN ACCORDANCE WITH THE PROJECT SPECIFICATIONS.
2. CONCRETE FILL SHALL CONFORM TO CLASS "C" CONCRETE, 2500 PSI COMPRESSIVE STRENGTH AT 28 DAYS, IN ACCORDANCE WITH THE PROJECT SPECIFICATIONS.
3. CONCRETE COVER FOR REINFORCING BARS SHALL BE:
   CAST AGAINST AND PERMANENTLY EXPOSED TO EARTH = 3"
   ALL OTHER REINFORCING = 2"
4. NO PIPES OR DUCTS SHALL BE PLACED IN STRUCTURAL CONCRETE UNLESS SPECIFICALLY DETAILED. SEE MECHANICAL AND/OR ELECTRICAL DRAWINGS FOR LOCATION OF SLEEVES THROUGH WALLS AND FLOORS.
5. THE LOCATION OF ALL CONSTRUCTION JOINTS NOT SPECIFICALLY NOTED OR SHOWN SHALL BE APPROVED BY THE STRUCTURAL ENGINEER.
6. PROVIDE 3/4" CHAMFER AT ALL EXPOSED CONCRETE EDGES EXPOSED TO VIEW.

ADHESIVE ANCHORS/DOWELS

1. ADHESIVE ANCHOR SYSTEM FOR ANCHORS AND DOWELS IN CONCRETE SHALL BE "HIT-HY 150 MAX-SD", MANUFACTURED BY HILTI OR "SET-XP EPOXY" MANUFACTURED BY SIMPSON STRONG-TIE COMPANY. ANCHORS/DOWELS SHALL BE INSTALLED IN ACCORDANCE WITH I.C.C. EVALUATION REPORT No. 3013. FOR HILTI ANCHORS OR I.C.C. EVALUATION REPORT No. 2508 FOR SIMPSON ANCHORS.
2. SPECIAL INSPECTION PER CHAPTER 17 OF THE CALIFORNIA BUILDING CODE AND THE I.C.C. REPORT SHALL BE PROVIDED DURING ANCHOR INSTALLATION.
3. AN ALTERNATIVE ADHESIVE ANCHOR/DOWEL PRODUCT MAY BE SUBMITTED TO THE ENGINEER FOR APPROVAL, PROVIDED THAT IT HAS A CURRENT I.C.C. RESEARCH REPORT APPROVAL.
4. ALL ABANDONED HOLES SHALL BE FILLED WITH A DRYPACK GROUT WITH A MINIMUM 28-DAY COMPRESSIVE STRENGTH OF 5,000 PSI. THE FILLED HOLE(S) SHALL BE PREPARED AND CLEANED AS REQUIRED BY THE GROUT MANUFACTURER.
5. LOCATE EXISTING REINFORCING USING A NON-DESTRUCTIVE METHOD (PACHOMETER OR OTHER), PRIOR TO DRILLING HOLES FOR ANCHORS. MAINTAIN A MINIMUM CLEARANCE OF 1" BETWEEN THE REINFORCEMENT AND THE ANCHOR. HOLES SHALL BE DRILLED WITH A HAMMER DRILL AND CARBIDE BIT.
6. STAINLESS STEEL RODS SHALL CONFORM TO A.S.T.M. F593, GROUP 2. STAINLESS STEEL NUTS SHALL CONFORM TO A.S.T.M. F594, GROUP 2.

ADHESIVE ANCHOR EMBEDMENT AND SPACING

ANCHOR DIAMETER	EMBEDMENT DEPTH	MINIMUM DISTANCE TO CONCRETE OR MASONRY EDGE	MINIMUM CENTER-TO CENTER ANCHOR SPACING
3/8"	3 1/2"	2"	2"
1/2"	4 1/4"	2 1/2"	2 1/2"
5/8"	5"	3 1/4"	3 1/4"
3/4"	6 3/4"	4"	4"
1"	9"	5"	5"
1 1/4"	12"	6 1/4"	6 1/4"

DESIGN CRITERIA

ROOF LOADING

LIVE LOAD = SEE TABLE ON SHT S-502 FOR EXTERNAL LOADING

SOIL PROPERTIES DESIGN VALUES

GEOTECHNICAL REPORT
LEIGHTON CONSULTING, INC.'S GEOTECHNICAL EXPLORATION VICTOR VALLEY WATER RECLAMATION AUTHORITY (VVWRA) UPPER NARROWS SEWER PIPELINE REPLACEMENT ALTERNATIVE 2 ALIGNMENT DATED NOVEMBER 2011 PROJECT NO 603226.001

SOIL PROPERTIES

ALLOWABLE SOIL BEARING (NET)	1500 PSF (UNDISTURBED SOIL OR BEDROCK 10FT BELOW FINISH GRADE)

MAY BE INCREASED BY 1/3 FOR SHORT TERM LOADS (SEISMIC/WIND)

SUBGRADE MODULUS	250 PCI (10FT BELOW THE EXISTING GRADE)
FRICTION COEFFICIENT	0.40 (NATIVE SOIL)

LATERAL EARTH PRESSURE, SUBMERGED (E.F.P.)

ACTIVE	92.4 PCF
AT-REST	107.4 PCF
PASSIVE	145 PCF

SOIL WEIGHT	120 PCF (MOIST COMPACTED FILL)
SOIL BUOYANT UNIT WEIGHT	60 PCF
G.W. (HISTORICAL)	VARIES
G.W. (DESIGN)	AT FINISHED GRADE

FS =1.5 FOR BUOYANT UPLIFT

STRUCTURAL ABBREVIATIONS

A.C.I.	AMERICAN CONCRETE INSTITUTE
A.S.T.M.	AMERICAN SOCIETY FOR TESTING AND MATERIALS
BNSF	BURLINGTON NORTHERN SANTA FE
BTM.	BOTTOM
C.I.P.	CAST IN PLACE
C.J.	CONSTRUCTION JOINT
CL.	CENTERLINE
CLR	CLEAR
CONC.	CONCRETE
CONT	CONTINUOUS
DIA	DIAMETER
(E)	EXISTING
EL.	ELEVATION
EQ.	EQUAL
EXIST.	EXISTING
FDN.	FOUNDATION
F.G.	FINISH GRADE
F.S.	FINISHED SURFACE
FT.	FOOT
FTG.	FOOTING
GEN.	GENERAL
G.W.	GROUNDWATER
HORIZ.	HORIZONTAL
HT.	HEIGHT
I.C.C.	INTERNATIONAL CODE COUNCIL
K	KIPS
KCR	KEMPER CAMPBELL RANCH
KSI	KIPS PER SQUARE INCH
LLC	LEWIS LEARNING CENTER
MAX	MAXIMUM
MFR.	MANUFACTURER
MIN	MINIMUM
N.T.S.	NOT TO SCALE
O.C.	ON CENTER
PCF	POUNDS PER CUBIC FOOT
PSF	POUNDS PER SQUARE FOOT
PSI	POUNDS PER SQUARE INCH
REINF	REINFORCING
RR	RAILROAD
SHT.	SHEET
SIM.	SIMILAR
SPECS.	SPECIFICATIONS
SQ.	SQUARE
T.O.C.	TOP OF CONCRETE
T.O.F.	TOP OF FOOTING
TRANS.	TRANSVERSE
TYP	TYPICAL
T.W.	TOP OF WALL
U.N.O	UNLESS NOTED OTHERWISE
VERT	VERTICAL
VV	VICTORVILLE
w/	WITH
@	AT
&	AND
#	NUMBER

SPECIAL INSPECTIONS REQUIRED

SPECIAL INSPECTIONS REQUIRED FOR THIS PROJECT SHALL BE PERFORMED IN ACCORDANCE WITH C.B.C. CHAPTER 17. SPECIAL INSPECTIONS SHALL BE PERFORMED BY A SPECIAL INSPECTOR, EMPLOYED BY THE OWNER.

THE SPECIAL INSPECTOR SHALL BE CERTIFIED BY THE INTERNATIONAL CODE COUNCIL (I.C.C.) TO PERFORM INSPECTION FOR THE PARTICULAR TYPE OF CONSTRUCTION OR OPERATION REQUIRING SPECIAL INSPECTION.

THE SPECIAL INSPECTOR SHALL FURNISH INSPECTION REPORTS TO THE BUILDING OFFICIAL AND/OR THE ENGINEER. ALL DISCREPANCIES SHALL BE BROUGHT TO THE IMMEDIATE ATTENTION OF THE CONTRACTOR FOR CORRECTION, THEN, IF UNCORRECTED, TO THE STRUCTURAL ENGINEER AND TO THE BUILDING OFFICIAL.

THE SPECIAL INSPECTOR SHALL SUBMIT A FINAL SIGNED REPORT STATING WHETHER THE WORK REQUIRING SPECIAL INSPECTION WAS, TO THE BEST OF THE INSPECTOR'S KNOWLEDGE, IN CONFORMANCE WITH THE APPROVED PLANS AND SPECIFICATIONS AND THE APPLICABLE WORKMANSHIP PROVISIONS OF THIS CODE.

IT SHALL BE THE CONTRACTOR'S SOLE RESPONSIBILITY TO PROVIDE AT LEAST 48 HOURS ADVANCE NOTICE TO THE OWNER/OWNER'S REPRESENTATIVE WHEN HIS WORK IS READY FOR ANY REQUIRED SPECIAL INSPECTIONS.

SPECIAL INSPECTION SHALL BE PROVIDED FOR THE FOLLOWING TYPES OF WORK LISTED BELOW:*

POST INSTALLED ANCHORS:	CONT	PERIODIC	N/A
1. VERIFY ANCHOR AND/OR REBAR MATERIAL TYPE AND DIMENSIONS	■	□	□
2. VERIFY CONCRETE TYPE AND COMPRESSIVE STRENGTH	■	□	□
3. VERIFY HOLE DIMENSIONS AND CLEANING PROCEDURE	■	□	□
4. VERIFY ANCHOR SPACING EDGE DISTANCES, BASE MATERIAL THICKNESS, ANCHOR EMBEDMENT AND TIGHTENING TORQUE	■	□	□

NOT FOR CONSTRUCTION

TETRA TECH
www.tetratech.com
17885 Von Karman Avenue, Suite 500
Irvine, CA 92614-6213
Tel: (949) 809-5000 Fax: (949) 809-5010

VICTOR VALLEY WASTEWATER RECLAMATION AUTHORITY

MARK	DATE	DESCRIPTION	BY

VVWRA
UPPER NARROWS PIPELINE REPLACEMENT

GENERAL STRUCTURAL NOTES

Project No.:	135-09065-11001
Designed By:	DLW
Drawn By:	LEG
Checked By:	LEB

S-001

Copyright: Tetra Tech

Bar Measures 1 inch

10/30/2012 1:25:36 PM - P:\09065\135-09065-11001\CAD\SHEETFILES\S-001-GENERALNOTES.DWG - JOHNSON, WILLIE

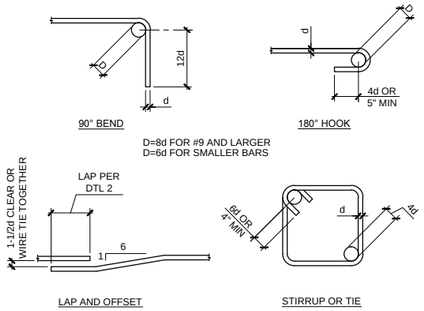

1 TYPICAL BAR BENDS

SCALE: NTS

REINFORCING LAP SPLICE SCHEDULE				
BAR	f'c=2500	f'c=3250	f'c=4000	f'c=5000
	L (inches)	L (inches)	L (inches)	L (inches)
3	24	21	19	17
4	32	28	25	23
5	39	35	31	28
6	47	42	37	34
7	69	60	54	49
8	78	69	62	56

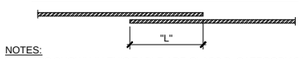

NOTES:

1. LAPS SHOWN IN THIS TABLE ARE CLASS B, CATEGORY 3 TYPE SPLICES. LAP LENGTH IS BASED UPON SMALLER OF TWO BARS BEING SPLICED WHEN NOT THE SAME SIZE.
2. INCREASE LAP LENGTHS BY A FACTOR OF 1.3 FOR HORIZONTAL REINFORCEMENT SO PLACED THAT MORE THAN 12 INCHES OF CONCRETE IS CAST IN THE MEMBER BELOW THIS REINFORCEMENT.

2 TYPICAL BAR BENDS

SCALE: NTS

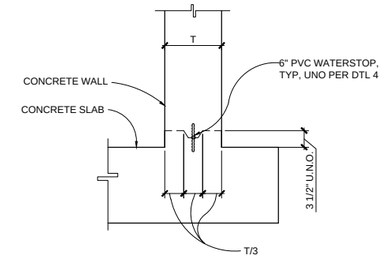

3 TYPICAL STARTER WALL

SCALE: NTS

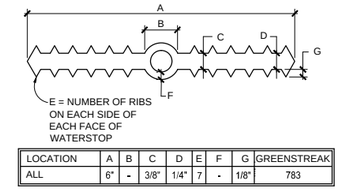

LOCATION	A	B	C	D	E	F	G	GREENSTREAK
ALL	6"	-	3/8"	1/4"	7	-	1/8"	783

* SEE NOTE 1 BELOW

NOTES:

1. NO CENTERBULB ALLOWED IN WATERSTOP FOR VERTICAL JOINTS.
2. ALL SPLICES SHALL BE MADE IN ACCORDANCE WITH MANUFACTURER'S RECOMMENDATIONS. SUBMIT SHOP DRAWINGS PRIOR TO INSTALLATION OR SPLICING WATERSTOPS.

4 WATERSTOP

SCALE: NTS

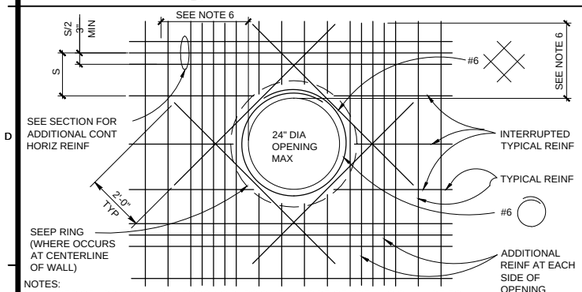

NOTES:

1. NUMBER OF ADDITIONAL REINFORCING BARS ON EACH SIDE OF OPENING SHALL BE EQUAL TO HALF OF THE NUMBER OF INTERRUPTED BARS (BUT NO LESS THAN 1 BAR EACH SIDE).
2. SIZE OF ADDITIONAL BARS SHALL MATCH THE SIZE OF INTERRUPTED REINFORCING BARS.
3. PROVIDE STANDARD HOOKS ON BARS IF LAP LENGTH EXTENSION CANNOT BE OBTAINED.
4. PLACE ADDITIONAL BARS IN SAME PLANE AS INTERRUPTED REINFORCING. PLACE #6 & INSIDE OF PLANE OF INTERRUPTED AND ADDITIONAL REINFORCING.
5. ALL REINFORCING SHALL CLEAR EDGE OF OPENING, PIPE OR FLANGE COLLARS BY 2"
6. EXTEND ADDED BARS PAST EDGE OF OPENING A DISTANCE EQUAL TO THE OPENING DIAMETER OR 48 BAR DIAMETERS, WHICHEVER IS GREATER.
7. WHERE SPECIFIED LENGTHS CANNOT BE ACHIEVED, BEND REINFORCING AND PROVIDE A STANDARD 90° BEND OR 180° HOOK.

4 ADDITIONAL REINFORCING AT WALL PENETRATIONS FOR PIPING UP TO 24" DIAMETER

SCALE: NTS

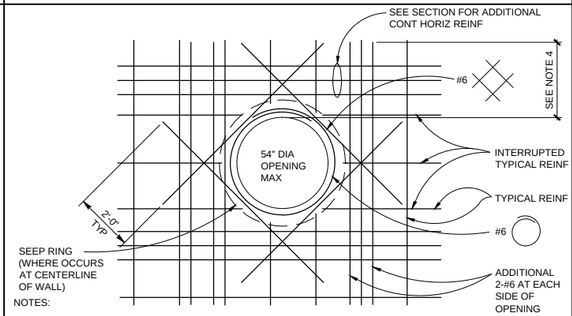

NOTES:

1. PROVIDE STANDARD HOOKS ON BARS IF LAP LENGTH EXTENSION CANNOT BE OBTAINED.
2. PLACE ADDITIONAL BARS IN SAME PLANE AS INTERRUPTED REINFORCING. PLACE #6 & INSIDE OF PLANE OF INTERRUPTED AND ADDITIONAL REINFORCING.
3. ALL REINFORCING SHALL CLEAR EDGE OF OPENING, PIPE OR FLANGE COLLARS BY 2"
4. EXTEND ADDED BARS PAST EDGE OF OPENING A DISTANCE EQUAL TO THE OPENING DIAMETER OR 48 BAR DIAMETERS, WHICHEVER IS GREATER.
5. WHERE SPECIFIED LENGTHS CANNOT BE ACHIEVED, BEND REINFORCING AND PROVIDE A STANDARD 90° BEND OR 180° HOOK.

5 ADDITIONAL REINFORCING AT WALL PENETRATIONS FOR PIPING UP TO 54" DIAMETER

SCALE: NTS

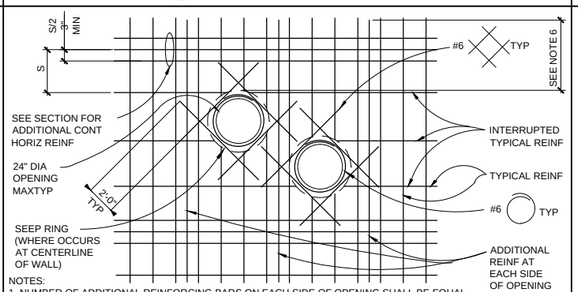

NOTES:

1. NUMBER OF ADDITIONAL REINFORCING BARS ON EACH SIDE OF OPENING SHALL BE EQUAL TO HALF OF THE NUMBER OF INTERRUPTED BARS (BUT NO LESS THAN 1 BAR EACH SIDE).
2. SIZE OF ADDITIONAL BARS SHALL MATCH THE SIZE OF INTERRUPTED REINFORCING BARS.
3. PROVIDE STANDARD HOOKS ON BARS IF LAP LENGTH EXTENSION CANNOT BE OBTAINED.
4. PLACE ADDITIONAL BARS IN SAME PLANE AS INTERRUPTED REINFORCING. PLACE #6 & INSIDE OF PLANE OF INTERRUPTED AND ADDITIONAL REINFORCING.
5. ALL REINFORCING SHALL CLEAR EDGE OF OPENING, PIPE OR FLANGE COLLARS BY 2"
6. EXTEND ADDED BARS PAST EDGE OF OPENING A DISTANCE EQUAL TO THE OPENING DIAMETER OR 48 BAR DIAMETERS, WHICHEVER IS GREATER.
7. WHERE SPECIFIED LENGTHS CANNOT BE ACHIEVED, BEND REINFORCING AND PROVIDE A STANDARD 90° BEND OR 180° HOOK.

6 ADDITIONAL REINFORCING AT MULTIPLE WALL PENETRATIONS FOR PIPING UP TO 24" DIAMETER

SCALE: NTS

NOT FOR CONSTRUCTION

TETRA TECH
www.tetratech.com
17885 Von Karman Avenue, Suite 500
Irvine, CA 92614-6213
Tel: (949) 809-5000 Fax: (949) 809-5010

VICTOR VALLEY WASTEWATER RECLAMATION AUTHORITY

MARK	DATE	DESCRIPTION	BY

VWWRA
UPPER NARROWS PIPELINE REPLACEMENT

TYPICAL STRUCTURAL DETAILS

Project No.:	135-09065-11001
Designed By:	DLW
Drawn By:	LEG
Checked By:	LEB

S-501

Bar Measures 1 inch

Copyright: Tetra Tech

10/30/2012 1:25:41 PM - P:\09065\135-09065-11001\CAD\SHEETFILES\S-501-DETAILS.DWG - JOHNSON, WILLIE

MH Name/No.	MH Inside Diameter, D	Location	External Loading	t, MH Wall Thickness (inches)	Vertical Reinforcing	Horizontal Reinforcing	Footing Thickness (inches)	Footing Reinforcing
MH AV-3A	4'-0" (48")	LLC (CONNECTION TO EXIST)	HS20	8.5	#5@12"	#5@12"	14	#5@12" EW EF
MH AVS-1	8'-0" (96")	KCR	HS20	8.5	#5@12"	#5@12"	14	#5@12" EW EF
MH AVS-2	8'-0" (96")	LLC	HS20	8.5	#5@12"	#5@12"	14	#5@12" EW EF
MH VV-4-25A	7'-0" (84")	CITY OF VV (CONNECTION TO EXIST)	HS20	8.5	#5@12"	#5@12"	14	#5@12" EW EF
MH UNI-1	7'-0" (84")	CITY OF VV, BNSF PROPERTY	E80	8.5	#5@12"	#5@12"	14	#5@12" EW EF
MH UNI-2	7'-0" (84")	CITY OF VV, BNSF PROPERTY	E80	8.5	#5@12"	#5@12"	14	#5@12" EW EF
MH UNI-3	7'-0" (84")	CITY OF VV	HS20	8.5	#5@12"	#5@12"	14	#5@12" EW EF
MH UNI-4	7'-0" (84")	CITY OF VV	HS20	8.5	#5@12"	#5@12"	14	#5@12" EW EF
MH UNI-5	7'-0" (84")	CITY OF VV	HS20	8.5	#5@12"	#5@12"	14	#5@12" EW EF
MH UNI-6	7'-0" (84")	CITY OF VV	HS20	8.5	#5@12"	#5@12"	14	#5@12" EW EF
MH UNI-7	7'-0" (84")	CITY OF VV	HS20	8.5	#5@12"	#5@12"	14	#5@12" EW EF
MH UNI-8	7'-0" (84")	KCR	HS20	8.5	#5@12"	#5@12"	14	#5@12" EW EF
MH UNI-9	8'-0" (96")	KCR	HS20	8.5	#5@12"	#5@12"	14	#5@12" EW EF
MH UNI-10	7'-0" (84")	KCR, BNSF PROPERTY	E80	8.5	#5@12"	#5@12"	14	#5@12" EW EF
MH UNI-11	7'-0" (84")	KCR, BNSF PROPERTY	E80	8.5	#5@12"	#5@12"	14	#5@12" EW EF
MH VV-5-9	7'-0" (84")	EAST OF KCR AND RR (CONNECTION TO EXIST)	E80	8.5	#5@12"	#5@12"	14	#5@12" EW EF

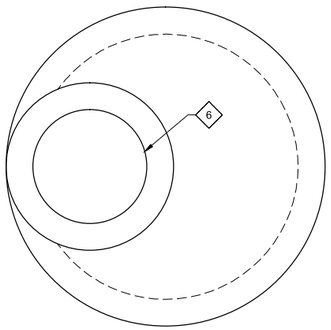

1 TOP PLAN
SCALE: NTS

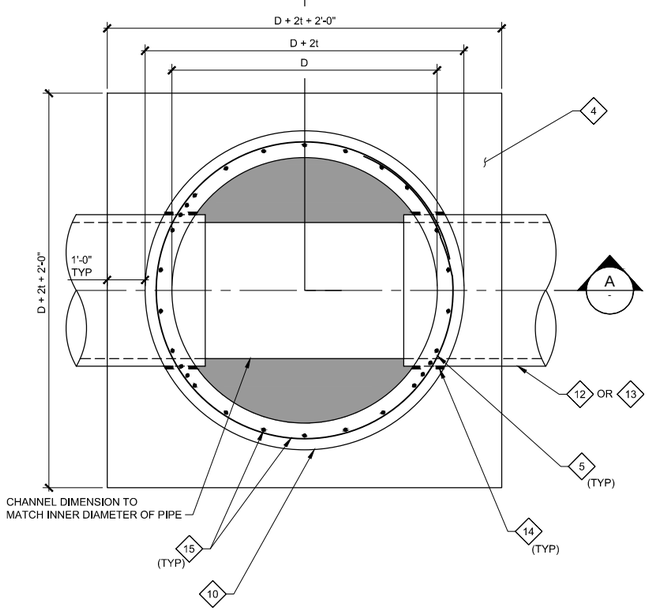

2 FOUNDATION PLAN
SCALE: NTS

DESIGN GROUNDWATER (GW) LEVEL: AT FINISHED GRADE (REF LEIGHTON CONSULTING, INC.'S GEOTECHNICAL EXPLORATION VICTOR VALLEY WATER RECLAMATION AUTHORITY (VVWRA) UPPER NARROWS SEWER PIPELINE REPLACEMENT ALTERNATIVE 2 ALIGNMENT DATED NOVEMBER 2011 PROJECT NO 603226.001)

KEYNOTES:

1. SEE GEOTECHNICAL REPORT FOR SUBGRADE PREPARATION
2. STARTER WALL - PER DTL 3 ON SHT S-501
3. CONCRETE FILL
4. SEE TABLE FOR FOOTING THICKNESS AND REINFORCEMENT
5. WALL PIPING PENETRATIONS - PER DTL 4, 5, & 6 ON SHT S-501
6. VVWRA BOLTED MANHOLE FRAME AND COVER - PER DTL 3 AND 4 ON SHT C-501.
7. MANHOLE ADJUSTMENT TO GRADE - PER DTL 2 ON SHT C-501
8. PVC LINER PER NOTES 2, 3, AND 6 ON DTL 1 ON SHT C-501
9. PRE-CAST CONE SECTION TO CAST-IN-PLACE CONCRETE WALL CONNECTION, SEE NOTE 5 ON DTL 1 ON SHT C-501
10. CAST-IN-PLACE SHAFT, SEE TABLE AND DTL 1 ON SHT C-501
11. NOT USED
12. PROPOSED PIPE, SEE TABLE
13. EXISTING PIPE, SEE TABLE
14. FOR MANHOLE WALL PENETRATION BY HDPE OR FPVC PIPE, CONTRACTOR SHALL INSTALL TWO COMPRESSED SEGMENTED STAINLESS STEEL EPDM RUBBER "LINK SEAL" MECHANICAL SEALS BY POWER PLANTS SUPPLY COMPANY OR APPROVED EQUAL MODEL 0S-316 WITH PSI NITRILE RUBBER (ONE FOR EACH WALL FACE), TYPICAL EACH PIPE PENETRATION AT ALL MANHOLES. LINK SEAL TO PROVIDE INSURANCE AGAINST ASTM B117-97 SALT SPRAY EXPOSURE TEST WITH ASTM A-316 BOLTS AND HARWARE. LINK SEAL TO BE INSTALLED PER MANUFACTURER'S WRITTEN INSTRUCTIONS
15. HORIZONTAL AND VERTICAL SHAFT REINFORCING PER SECTION A ON THIS SHEET

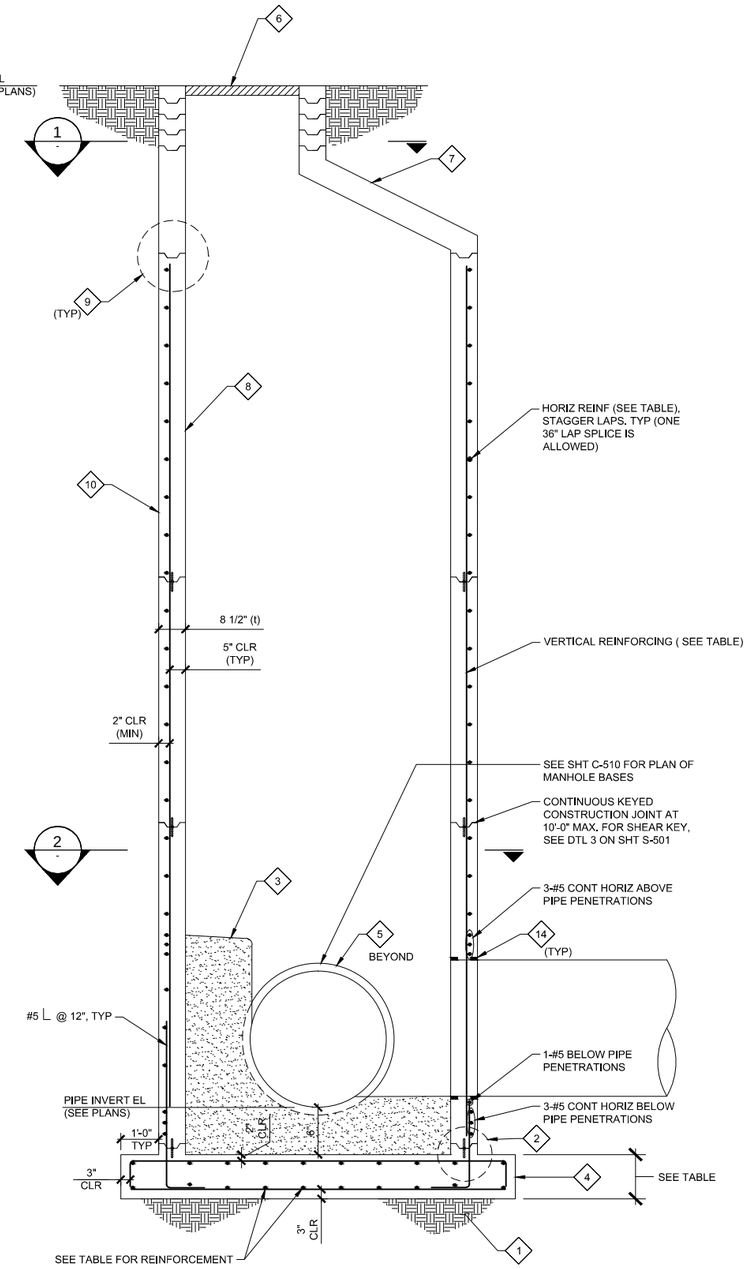

A SECTION
SCALE: NTS

NOT FOR CONSTRUCTION

TETRA TECH
www.tetratech.com
17885 Von Karman Avenue, Suite 500
Irvine, CA 92614-6213
Tel: (949) 809-5000 Fax: (949) 809-5010

VICTOR VALLEY WASTEWATER RECLAMATION AUTHORITY

MARK	DATE	DESCRIPTION	BY

VVWRA
UPPER NARROWS PIPELINE REPLACEMENT

MANHOLE DETAIL PLAN AND SECTION

Project No.:	135-09065-11001
Designed By:	DLW
Drawn By:	WVPJ
Checked By:	LEB

S-502

Copyright: Tetra Tech

Bar Measures 1 inch

10/30/2012 1:25:45 PM - P:\09065\135-09065-11001\CAD\SHEETFILES\S-502-MANHOLEDETAIL.DWG - JOHNSON, WILLIE

APPENDIX 2

NOTES TO USERS

This map is for use in administering the National Flood Insurance Program. It does not necessarily identify all areas subject to flooding, particularly from local drainage sources of small size. The **community map repository** should be consulted for possible updated or additional flood hazard information.

To obtain more detailed information in areas where **Base Flood Elevations** (BFEs) and/or **floodways** have been determined, users are encouraged to consult the Flood Profiles and Floodway Data and/or Summary of Stillwater Elevations tables contained within the Flood Insurance Study (FIS) report that accompanies this FIRM. Users should be aware that BFEs shown on the FIRM represent rounded whole-foot elevations. These BFEs are intended for flood insurance rating purposes only and should not be used as the sole source of flood elevation information. Accordingly, flood elevation data presented in the FIS report should be utilized in conjunction with the FIRM for purposes of construction and/or floodplain management.

Coastal Base Flood Elevations shown on this map apply only landward of 0.0' North American Vertical Datum of 1988 (NAVD 88). Users of this FIRM should be aware that coastal flood elevations are also provided in the Summary of Stillwater Elevations tables in the Flood Insurance Study report for this jurisdiction. Elevations shown in the Summary of Stillwater Elevations tables should be used for construction and/or floodplain management purposes when they are higher than the elevations shown on this FIRM.

Boundaries of the **floodways** were computed at cross sections and interpolated between cross sections. The floodways were based on hydraulic considerations with regard to requirements of the National Flood Insurance Program. Floodway widths and other pertinent floodway data are provided in the Flood Insurance Study report for this jurisdiction.

Certain areas not in Special Flood Hazard Areas may be protected by **flood control structures**. Refer to Section 2.4 "Flood Protection Measures" of the Flood Insurance Study report for information on flood control structures for this jurisdiction.

The **projection** used in the preparation of this map was Universal Transverse Mercator (UTM) zone 11 North. The **horizontal datum** was NAD 83, GRS80 spheroid. Differences in datum, spheroid, projection or UTM zones used in the production of FIRMs for adjacent jurisdictions may result in slight positional differences in map features across jurisdiction boundaries. These differences do not affect the accuracy of this FIRM.

Flood elevations on this map are referenced to the North American Vertical Datum of 1988. These flood elevations must be compared to structure and ground elevations referenced to the same **vertical datum**. For information regarding conversion between the National Geodetic Vertical Datum of 1929 and the North American Vertical Datum of 1988, visit the National Geodetic Survey website at http://www.ngs.noaa.gov or contact the National Geodetic Survey at the following address:

NGS Information Services
NOAA, N/NGS12
National Geodetic Survey
SSMC-3, #9202
1315 East-West Highway
Silver Spring, Maryland 20910-3282
(301) 713-3242

To obtain current elevation, description, and/or location information for **bench marks** shown on this map, please contact the Information Services Branch of the National Geodetic Survey at **(301) 713-3242**, or visit its website at http://www.ngs.noaa.gov.

Base map information shown on this FIRM was derived from digital orthophotography collected by the U.S. Department of Agriculture Farm Service Agency. This imagery was flown in 2005 and was produced with a 1-meter ground sample distance.

This map may reflect more detailed and up-to-date stream channel configurations than those shown on the previous FIRM for this jurisdiction. The floodplains and floodways that were transferred from the previous FIRM may have been adjusted to confirm to these new stream channel configurations. As a result, the Flood Profiles and Floodway Data tables in the Flood Insurance Study Report (which contains authoritative hydraulic data) may reflect stream channel distances that differ from what is shown on this map.

Corporate limits shown on this map are based on the best data available at the time of publication. Because changes due to annexations or de-annexations may have occurred after this map was published, map users should contact appropriate community officials to verify current corporate limit locations.

Please refer to the separately printed **Map Index** for an overview map of the county showing the layout of map panels; community map repository addresses; and a Listing of Communities table containing National Flood Insurance Program dates for each community as well as a listing of the panels on which each community is located.

Contact the **FEMA Map Service Center** at 1-800-358-9616 for information on available products associated with this FIRM. Available products may include previously issued Letters of Map Change, a Flood Insurance Study report, and/or digital versions of this map. The FEMA Map Service Center may also be reached by Fax at 1-800-358-9620 and its website at http://msc.fema.gov/.

If you have **questions about this map** or questions concerning the National Flood Insurance Program in general, please call **1-877-FEMA MAP** (1-877-336-2627) or visit the FEMA website at http://www.fema.gov.

WARNING: This map contains levees, dikes, or other structures that have been provisionally accredited and mapped as providing protection from the 1-percent-annual-chance flood. To maintain accreditation, the levee owner or community is required to submit documentation necessary to comply with 44 CFR Section 65.10 by August 8, 2009. Because of the risk of overtopping or failure of the structure, communities should take proper precautions to protect lives and minimize damages in these areas, such as issuing an evacuation plan and encouraging property owners to purchase flood insurance.

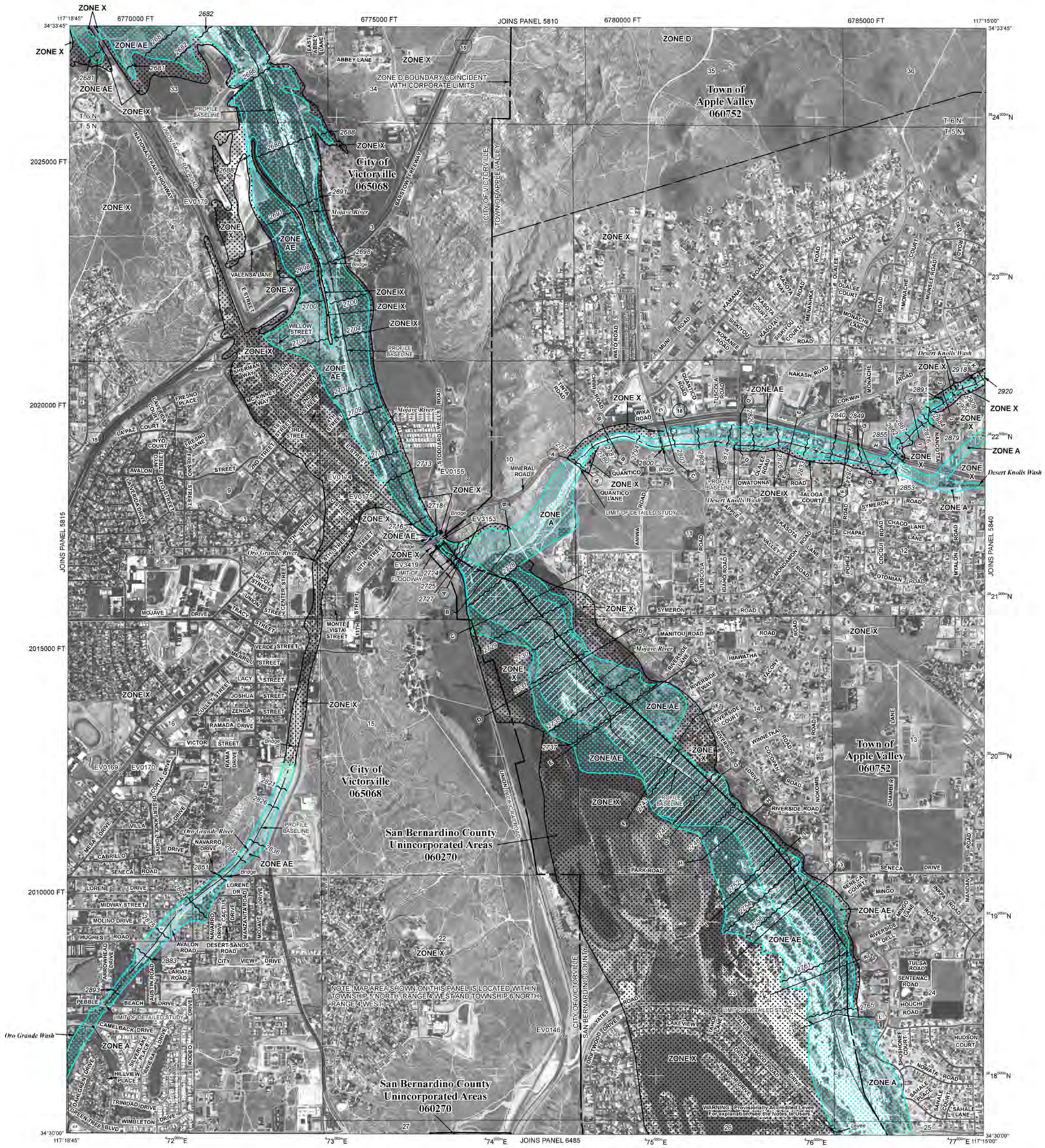

LEGEND

SPECIAL FLOOD HAZARD AREAS SUBJECT TO INUNDATION BY THE 1% ANNUAL CHANCE FLOOD

The 1% annual flood (100-year flood), also known as the base flood, is the flood that has a 1% chance of being equaled or exceeded in any given year. The Special Flood Hazard Area is the area subject to flooding by the 1% annual chance flood. Areas of Special Flood Hazard include Zones A, AE, AH, AO, AR, A99, V, and VE. The Base Flood Elevation is the water-surface elevation of the 1% annual chance flood.

ZONE A	No Base Flood Elevations determined.
ZONE AE	Base Flood Elevations determined.
ZONE AH	Flood depths of 1 to 3 feet (usually areas of ponding); Base Flood Elevations determined.
ZONE AO	Flood depths of 1 to 3 feet (usually sheet flow on sloping terrain); average depths determined. For areas of alluvial fan flooding, velocities also determined.
ZONE AR	Special Flood Hazard Area formerly protected from the 1% annual chance flood by a flood control system that was subsequently decertified. Zone AR indicates that the former flood control system is being restored to provide protection from the 1% annual chance or greater flood.
ZONE A99	Area to be protected from 1% annual chance flood by a Federal flood protection system under construction; no Base Flood Elevations determined.
ZONE V	Coastal flood zone with velocity hazard (wave action); no Base Flood Elevations determined.
ZONE VE	Coastal flood zone with velocity hazard (wave action); Base Flood Elevations determined.

FLOODWAY AREAS IN ZONE AE

The floodway is the channel of a stream plus any adjacent floodplain areas that must be kept free of encroachment so that the 1% annual chance flood can be carried without substantial increases in flood heights.

OTHER FLOOD AREAS

ZONE X	Areas of 0.2% annual chance flood; areas of 1% annual chance flood with average depths of less than 1 foot or with drainage areas less than 1 square mile; and areas protected by levees from 1% annual chance flood.

OTHER AREAS

ZONE X	Areas determined to be outside the 0.2% annual chance floodplain.
ZONE D	Areas in which flood hazards are undetermined, but possible.

COASTAL BARRIER RESOURCES SYSTEM (CBRS) AREAS

OTHERWISE PROTECTED AREAS (OPAs)

CBRS areas and OPAs are normally located within or adjacent to Special Flood Hazard Areas.

1% annual chance floodplain boundary

0.2% annual chance floodplain boundary

Floodway boundary

Zone D boundary

CBRS and OPA boundary

Boundary dividing Special Flood Hazard Area Zones and boundary dividing Special Flood Hazard Areas of different Base Flood Elevations, flood depths or flood velocities.

513	Base Flood Elevation line and value; elevation in feet*
(EL 987)	Base Flood Elevation value where uniform within zone; elevation in feet*

* Referenced to the North American Vertical Datum of 1988

(A)———(A)	Cross section line
(23)- - - -(23)	Transect line
87°07'45", 32°22'30"	Geographic coordinates referenced to the North American Datum of 1983 (NAD 83), Western Hemisphere
7680000 N	1000-meter Universal Transverse Mercator grid values, zone 11N
600000 FT	5000-foot grid ticks: California State Plane coordinate system, zone V (FIPSZONE 0405), Lambert Conformal Conic projection
DX5510 ×	Bench mark (see explanation in Notes to Users section of this FIRM panel)
● M1.5	River Mile

MAP REPOSITORY
Refer to listing of Map Repositories on Map Index

EFFECTIVE DATE OF COUNTYWIDE
FLOOD INSURANCE RATE MAP
March 18, 1996

EFFECTIVE DATE(S) OF REVISION(S) TO THIS PANEL
August 28, 2008 - to update corporate limits, to change Base Flood Elevations and Special Flood Hazard Areas, to update map format, to add roads and road names, and to incorporate previously issued Letters of Map Revision.

For community map revision history prior to countywide mapping, refer to the Community Map History table located in the Flood Insurance Study report for this jurisdiction.

To determine if flood insurance is available in this community, contact your Insurance agent or call the National Flood Insurance Program at 1-800-638-6620.

MAP SCALE 1" = 1000'

500 0 1000 2000 FEET

300 0 300 600 METERS

NFIP

NATIONAL FLOOD INSURANCE PROGRAM

PANEL 5820H

FIRM
FLOOD INSURANCE RATE MAP

SAN BERNARDINO COUNTY, CALIFORNIA
AND INCORPORATED AREAS
PANEL 5820 OF 9400

(SEE MAP INDEX FOR FIRM PANEL LAYOUT)

CONTAINS:

COMMUNITY	NUMBER	PANEL	SUFFIX
APPLE VALLEY, TOWN OF	060752	5820	H
SAN BERNARDINO COUNTY	060270	5820	H
VICTORVILLE, CITY OF	065068	5820	H

Notice to User: The **Map Number** shown below should be used when placing map orders; the **Community Number** shown above should be used on insurance applications for the subject community.

MAP NUMBER
06071C5820H

MAP REVISED
AUGUST 28, 2008

Federal Emergency Management Agency

APPENDIX 3

Biological Assessment
for the
Victor Valley Wastewater Reclamation Authority's
Upper Narrows Interceptor Replacement Project
San Bernardino County, California
(Declaration Number FEMA-1952-DR-CA & PW Number 828)

Prepared for:

Victor Valley Wastewater Reclamation Authority (VVWRA)
15776 Main Street, Suite 3
Hesperia CA 92345
Contact Person: Logan Olds, General Manager
Phone Number: (760) 948-9849x110

For submittal to:

U.S. Department of Homeland Security
Federal Emergency Management Agency (FEMA)
Region 9
1111 Broadway, Suite 1200
Oakland, California 94607
Contact Person: Morgan Griffin
Phone Number: (510) 627-7033

Prepared by:

Tom Dodson & Associates (TDA)
2150 North Arrowhead Avenue
San Bernardino, California 92405
Contact Person: Shay Lawrey
Phone Number: (909) 882-3612

February, 2012

TABLE OF CONTENTS

1 Introduction 1
2 Project Description 1
2.1 Project Site 2
2.2 Purpose and Need 2
2.3 Species Considered 2
2.4 History of Consultation 3
3 Action Area 3
3.1 Proposed Action 4
3.1.1 Horizontal directional drilling (HDD) 4
3.1.2 Jack and Bore 5
3.1.3 Tunneling 5
3.1.4 Conventional Open Trenching 6
3.1.5 Emergency by-Pass 6
4 Existing Environmental Conditions 6
4.1 Environmental Setting 7
4.2 Vegetation Communities 8
5 Species/Critical Habitat Considered 9
5.1 Potential Project-Related Impacts on Federally or State Listed Species 9
5.1.1 Southwestern Willow Flycatcher 9
5.1.2 Least Bell's Vireo 10
5.1.3 Desert Tortoise 11
5.2 Potential Project-Related Impacts on Federally Designated Critical Habitat 12
6 Effects Analysis 12
6.1 Approach 12
6.2 Impact Analysis 12
6.2.1 Southwestern Willow Flycatched 13
6.2.2 Southwestern Willow Flycatcher Critical Habitat 13
6.2.3 Least Bell's Vireo 13
6.2.4 Desert tortoise 14
6.3 Cumulative Impacts Analysis 14
7 Conservation Measures 14

7.1 Biological Monitoring 14
7.2 Defined Work Limits 15
7.3 Avoidance and Minimization 15
7.4 Reporting 15
8 Conclusions and Determination of Effects 16
9 Literature Cited 17
10 List of Contacts Made and Preparers 19

List of Figures

Figure 1a Regional Location Map
Figure 1b Location Map
Figure 2 Project Site Map
Figure 3 Aerial View of Project Area

List of Tables

Table 1 USFWS list of federally listed species potentially occurring in project area
Table 2 CNDDB special status species occurrence potential within project area

List of Appendices

Appendix 1 – General Biological Resource Assessment & Focused Desert Tortoise Survey
Appendix 2 – Focused SWWF & LBVI Survey Report

List of Acronyms and Abbreviations

BA	Biological Assessment
BNSF	BNSF Railway
CDFG	California Department of Fish and Game
CFR	Code of Federal Regulations
CNDDB	California Natural Diversity Database
CSA	County Service Area
dBA	decibel
EMA	Emergency Management Agency
ESA	Endangered Species Act
FE	Federally Endangered
FEMA	Federal Emergency Management Agency
FT	Federally Threatened
HDD	Horizontal Directional Drilling
HDPE	high density polyethylene
LBVI	least Bell's vireo
Leq	equivalent sound levels
LF	linear feet
MBTA	Migratory Bird Treaty Act
MGD	million gallons per day
MH	manhole
mph	miles per hour
RWQCB	Regional Water Quality Control Board
SWWF	southwestern willow flycatcher
TBM	Tunneling Boring Machine
TDA	Tom Dodson & Associates
USFWS	U.S. Fish and Wildlife Service
USGS	U.S. Geological Survey
VCP	vitrified clay pipe
VVWRA	Victor Valley Wastewater Reclamation Authority
WRCB	Water Resources Control Board

Executive Summary

A significant storm event occurred in the Victor Valley subregion and San Bernardino County, beginning the week of December 19, 2010. As a result of the rains, the Victor Valley Wastewater Reclamation Authority (VVWRA) sustained damage to the sewer interceptor under the Mojave River, in a section of the river known as the Upper Narrows. The sewer pipeline breach was discovered on December 29, 2010. VVWRA immediately constructed an emergency and temporary bypass pipeline and two booster pumping stations. Sand, sediment and debris entered the pipeline at the ruptured areas and eventually cemented in-place naturally.

The VVWRA has applied for Federal financial assistance (Federal action) from the Department of Homeland Security's Federal Emergency Management Agency (FEMA) through the Cal. Emergency Management Agency (CalEMA) to permanently replace the damaged main sewer interceptor line. FEMA is proposing to provide funding for the project under disaster relief that was implemented in response to this presidential disaster declaration, FEMA-1952-DR-CA, declared on January 21, 2011. The proposed project will provide greater public health safety for residents who are serviced by this sewer line, while protecting the waters of the Mojave River, community water supply, and the ecosystem from pollution caused by potential sewer ruptures during future major flooding events.

An initial reconnaissance-level biological survey was conducted on April 02, 2011 and included general coverage of the proposed action area, and staging areas, with special attention focused toward those habitats potentially supporting sensitive flora or fauna. Based on habitat types and structure found within the project area, focused/protocol surveys for the federally endangered southwestern willow flycatcher (SWWF) [*Empidonax traillii extimus*], the federally endangered least Bell's vireo (LBVI) [*Vireo bellii pusillus*] and federally threatened desert tortoise [*Gopherus agassizii*]. These surveys were conducted during the appropriate season for species presence, in good weather conditions and by a qualified and permitted biologist who followed all pertinent USFWS protocols. Between April 15 and May 29, 2011, 100% coverage focused desert tortoise surveys were conducted in areas of suitable habitat. Eight LBVI surveys were conducted between April 15 and July 31, 2011 and five SWWF were conducted between May 19 and July 17, 2011.

There will be no direct or indirect impact to SWWF critical habitat because no riparian habitat will be removed as part of this project. No SWWF or desert tortoise were detected during the 2011 surveys and based on the survey results, both species are considered absent from the project area. No direct or indirect impact to SWWF or desert tortoise will result from this project. However, during the 2011 surveys, LBVI were located within riparian habitat in close proximity to the project area. However, no above-ground work will occur within riparian habitat. Given that no work will occur in areas where LBVI can occur, no direct impacts to LBVI will result from the proposed project. The proposed project has no potential for direct incidental take of listed species or habitat. The use of Horizontal directional drilling construction methodology will avoid disturbing any of the riparian or wetland habitat within the Mojave River channel. Noise will be monitored when and where appropriate and excessive noise will be abated.

1 Introduction

This Biological Assessment (BA) has been prepared on behalf of the U.S. Department of Homeland Security Federal Emergency Management Agency (FEMA) and Victor Valley Wastewater Reclamation Authority (VVWRA) pursuant to the requirement of the U.S. Fish and Wildlife Service (USFWS) under Section 7 of the federal Endangered Species Act (ESA) of 1973 (36CFR40). Section 7 of the ESA directs federal agencies to use their existing authorities to conserve threatened and endangered species and, in consultation with USFWS, to ensure that any action authorized, funded, or carried out by such agency does not jeopardize the continued existence of listed species or destroy or adversely modify critical habitat.
The objective of this BA is to evaluate the potential direct, indirect, and cumulative effects of the proposed Upper Narrows Interceptor Replacement Project (Proposed Action) on federally listed species and designated critical habitats for consultation between FEMA and USFWS. The focus of this BA is on the potential effects of the proposed action on federally designated critical habitat for the southwestern willow flycatcher (SWWF) [*Empidonax traillii extimus*], the federally endangered least Bell's vireo (LBVI) [*Vireo bellii pusillus*] and federally threatened desert tortoise (DT) [*Gopherus agassizii*]. These species are known to occur within the vicinity of the project site in the Mojave River floodplain area.

2 Project Description

The VVWRA has applied for Federal financial assistance (Federal action) from FEMA through the California Emergency Management Agency (Cal EMA), to permanently replace damaged wastewater conveyance facilities. Specifically, a main sewer interceptor line located under the Mojave River was damaged during recent winter storms. This natural disaster contributed to the presidential disaster declaration FEMA-1952-DR-CA, declared on January 21, 2011: "Severe Winter Storms, Flooding, and Debris and Mud Flows" which occurred from December 17, 2010, to January 4, 2011. FEMA is proposing to fund the project under the Public Assistance Program that was implemented in response to this presidential disaster declaration FEMA-1952-DR-CA.

A significant storm event occurred in the Victor Valley subregion and San Bernardino County, beginning the week of December 19, 2010. As a result of the devastating rains, the VVWRA sustained damage to the sewer interceptor under the Mojave River, in a section of the river with extremely limited access known as the Upper Narrows. The sewer pipeline breach was discovered on December 29, 2010. VVWRA immediately began work to create an emergency sewer force main to bypass the breach in the damaged sewer interceptor, and divert the wastewater by constructing an emergency and temporary bypass pipeline lines and 2 booster pumping stations. Additionally, the force of the river flow resulting from the storm event was so great that the exposed manholes (MH) along the damaged sewer interceptor within the Mojave River (estimated to be between MH 5-1 to MH 5-8 which conveys flows from Hesperia and the City of Victorville, and MH 1 to MH 4 which conveys flows from the town of Apple Valley and portions of the San Bernardino County) became tilted, causing further damage to the pipeline

and manholes. Sand, sediment and debris entered the pipeline at the ruptured areas and eventually cemented in-place naturally.

As a result of the heavy river flows due to the storm, the existing Mojave River gravity sewer interceptor was damaged beyond repair and must be replaced between MH 5-1 to MH 5-8 on the Schedule V reach and MH 1 to MH 4 on the SAVI reach. Reconnaissance of the damage was performed via pipeline cleaning and sonar; this confirmed which portions of pipeline were damaged beyond repair and must be replaced in order to restore the function of the existing gravity sewer line interceptor.

2.1 Project Site

The project area lies within a section of the Mojave River known as the Upper Narrows in the Victor Valley subregion, located in southwestern San Bernardino County, California. The project area can be found on the U.S. Geological Survey (USGS) 7.5 Minute Series topographic map of the Victorville Quadrangle within Township 5 South, Range 5 North of Section 10 (Refer to Figures 1-3 located at the end of the document).

2.2 Purpose and Need

The need for the Proposed Action is to restore service provided by the damaged sewer interceptor line which is currently under emergency bypass. The purpose of the Proposed Action is to provide greater public health and safety for residents who are serviced by this sewer line, while protecting the waters of the Mojave River, community water supply, and the ecosystem from pollution caused by potential sewer ruptures during future major flooding events.

The VVWRA is a regional provider of wastewater collection, treatment and reclamation services with a service area encompassing approximately 211 square miles and treating up to approximately 14 million gallons per day (MGD). VVWRA currently serves a population of approximately 183,385 people via their member agencies of the City of Victorville, the City of Hesperia, the Town of Apple Valley, and select portions of the County of San Bernardino including County Service Area (CSA) 42 and CSA 64. Existing emergency sewage conveyance facilities installed as a temporary measure since the storms of December 2010 and January 2011 are inadequate for permanent use. Therefore, action is needed to restore permanent regional wastewater conveyance facilities that were damaged during the disaster.

2.3 Species Considered

The purpose of this BA is to review the Proposed Action in sufficient detail to determine to what extent any species currently listed or formally proposed for listing as endangered or threatened under the federal ESA may be affected by the Proposed Action. As per the USFWS species list provided for this project on July 18, 2011, three (3) federally listed species have been considered in this analysis (Table 1). These species are:

1. Least Bell's Vireo (LBVI) [*Vireo bellii pusillus*]
2. Southwestern Willow Flycatcher (SWWF) [*Empidonax traillii extimus*]
3. Desert Tortoise [*Gopherus agassizii*]

LBVI, SWWF and desert tortoise have been afforded special legal protection because of concern for their continued existence. Table 2 provides the California Natural Diversity Database (CNDDB) list of federally listed species documented within the Victorville quadrangle. and their respective occurrence potential within the project site.

2.4 History of Consultation

- June 15, 2011: With FEMA authorization, Tom Dodson & Associates (TDA) sent a letter addressed to Mr. Carl Benz of USFWS requesting a species list for the proposed federal action.

- July 18, 2011: The USFWS (Mr. Carl Benz and Ms. Jenna Castle) sent a reply letter providing a species list for the proposed federal action.

3 Action Area

- **Reach I-A** is located underneath the Mojave River commencing at the Lewis Learning Center. Activities within this reach include constructing 120 LF of sewer via open trench methods connecting to existing sewer at MH 4, constructing 1744 LF of sewer via HDD, constructing 53 LF of sewer via open trench connecting to Reach I-B and Reach II.

- **Reach I-B** is located underneath the BNSF Railroad at the Kemper Campbell Ranch. Activities within this reach include constructing 159 LF of sewer via open trench methods connecting to Reach I-A and Reach II, constructing 106 LF of sewer via Bore & Jack and constructing 41 LF of sewer via open trench methods connecting to existing sewer between existing MH VV 5-8 and VV 5-9.

- **Reach II** is located through the Upper Narrows Formation from the Kemper Campbell Ranch to Downtown Victorville. Activities within this reach include constructing 2664 LF of sewer via tunneling methods, constructing 138 LF of sewer via open trench methods connecting to Reach I-A and Reach I-B.

- **Reach III** is located through Downtown Victorville, C St, 7th St, and D St. Activities within this reach include constructing 1066 LF of sewer via open trench.

- **Reach IV** is located underneath the BNSF Railroad. Activities within this reach include constructing 143 LF of sewer via Bore & Jack.

- **Reach V** is located through Private Lands. Activities within this reach include constructing 195 LF of sewer via open trench methods connecting to existing sewer between existing MH 4-26 & 4-25.

3.1 Proposed Action

The proposed action involves re-installing the sewer line at substantial depth of approximately 30 to 35-feet below the Mojave River via Horizontal Directional Drilling (HDD) and relocating the remaining Schedule V sewer line out of the riverbed via Jack and Bore, Tunneling, and conventional open cut trenching along the streets in the adjacent City of Victorville. The existing damaged interceptor will be abandoned in place. The exposed manholes would be turned down or removed if it is possible to reach them within the riverbed without further destroying sensitive habitat, to limit the visual appearance of any remains of the pipeline. The new pipeline would be high density polyethylene (HDPE)-type pipeline or other state-of-the-art pipeline material, rather than the same pipe type that is currently used for the sewer line, which is vitrified clay pipe (VCP).

The proposed action minimizes in-the-river disturbance and most of the above ground construction activity would occur outside of any portions of the Mojave River bed. Diversion of river water is not likely to be necessary, although the tunneling and jack and bore pits may need to be dewatered. It is estimated that approximately 1.0 acre of river habitat will be temporarily disturbed as a result of construction activity within the Mojave River at the HDD areas.

The proposed action would entail the excavation and offsite disposal of soil material, either being stored on an adjacent site or hauled away.

The proposed action may require permits from the U.S. Army Corps of Engineers (Section 404 and/or Section 406), State Water Resources Control Board (WRCB) and Regional Water Quality Control Board (RWQCB), and the California Department of Fish and Game (CDFG). FEMA is the Federal Lead Agency (FLA) for this project and they will coordinate with the U.S. Army Corps of Engineers (Corps) if a Clean Water Act Section 404 permit from them is required.

As mentioned above, four different construction technologies would be required to construct the proposed action HDD; jack and bore; tunneling; and conventional open trenching (Please refer to figures 2 and 3). Descriptions of each technology is provided below.

3.1.1 Horizontal directional drilling (HDD)

HDD is a trenchless method of installing underground infrastructure. HDD creates a bore underground and would facilitate placing the permanent pipeline below the Mojave Riverbed and a section of the BNSF Railway along a prescribed bore path, through which the pipeline is pulled. This reduces the above ground disturbance to the areas at the entrance and exit staging areas as compared to conventional trenching which would disturb the entire riverbed and BNSF Railway. A staging area is required for the HDD entrance location; a minor staging area is

required for the HDD exit location. The excavated material will be exported off-site, and the bentonite slurry (drillers mud) will be recovered, processed and hauled off to a permitted/ licensed site for disposal.

Due to the potential for "frack out" (where bentonite could seep to the surface during drilling, reaming, and pipeline pulling near the entrance and exit locations of the HDD operations), a Frack-Out Contingency Plan (FCP) will be prepared to minimize frack out underneath the Mojave River. The FCP will establish operational procedures and responsibilities for the prevention, containment, and clean-up of frack-outs associated with the HDD operations. The specific objectives of FCP will be to: minimize the potential for a frack-out during HDD; provide for the timely detection of frack-outs; protect the environmentally sensitive riverbed and associated vegetation; ensure an organized, timely, and "minimum-impact" response in the event of a frack-out and release of lubricating bentonite; and ensure that all appropriate notifications are made immediately to the VVWRA, FEMA, USFWS, CDFG, Corps, and RWQCB within 24 hours; and that required documentation is completed.

The pipeline would be stored in 20 to 40-foot lengths on the previously disturbed /graded staging area, at the Lewis Learning Center. The lengths of the pipelines would be fused together at the Lewis Learning Center staging area to form one continuous pipeline prior to being fed underground by the HDD equipment. HDD is a continuous operation that would run 24 hours a day, 7 days a week, to complete the required tunneling. HDD would be employed for Reach I-A only, a distance of approximately 1,744 linear feet (LF) underneath the Mojave River; approximately 53 LF of open trench construction would be done to connect to Reach I-B and Reach II. The final connection back to the existing SAVI sewer line interceptor at the emergency booster by-pass pumping station will be made via open trench construction to MH-4 from the HDD exit portal at the Lewis Learning Center, a length of approximately 125 LF.

3.1.2 Jack and Bore

Jack and bore drilling would be necessary for the portions of the pipeline being installed underneath the BNSF railroad. This method involves digging entrance and exit pits to the depth of the pipeline underground, shoring the walls of the pits, laying the boring machines within the pits, setting up tracks, inserting an auger in the casing, and allowing the machine to push the auger and casing into the ground simultaneously while the machine is turning a cutting head through the ground. The auger carries the soil back to the machine where the soil is removed from the pits and disposed of. The pipeline will then be installed through the casing. Jack and bore is a continuous operation that would run 24 hours a day, 7 days a week, to complete the required drilling. Jack and Bore would be employed for Reach I-B (approximately 95 LF) at the Kemper Campbell Ranch crossing and Reach IV (approximately 140 LF) at 7th Street.

3.1.3 Tunneling

Tunneling is a trenchless method of installing underground infrastructure and in this case the main sewer interceptor pipeline. Tunneling necessary for the portions of the pipeline being installed where the HDD-installed pipeline and the first Jack and Bore pipeline connect to the start of open-trench construction, in C Street near the intersection of 8th Street. This method will

involve either the use of a Tunneling Boring Machine (TBM) and Excavator Shield or conventional rib and lagging, to create a small-diameter tunnel, through which the sewer pipeline will be installed. A staging area is required for the entrance portal and for the exit portal. The sides of the portals would be shored. A ramp would be excavated that leads down to the portals in order to remove the excavated soils and to facilitate tunneling operations. If ramps are not provided, materials and equipment will enter the portals via assistance of a crane or other heavy equipment such as loaders and backhoes. The pipeline would be stored in the staging area. Pipe segments be joined in the entrance portal as the pipe is placed and pushed through the tunnel. Tunneling using a TBM is a continuous operation that would operate 24 hours a day, 7 days a week, to complete the required tunneling to lower the risk of having the TBM become stuck and requiring recovery from above. Tunneling would be employed for Reach II only, a distance of approximately 2,634 linear feet underneath the existing Kemper Campbell Ranch land and C Street.

3.1.4 Conventional Open Trenching

The conventional open trench method involves excavation using typical trenching equipment such as excavators, drill rigs, backhoes, loaders, and dump trucks. Deep trenches would be dug up to an approximate depth of 30 to 40 feet in these areas, utilizing a sliding steel box or sheet shoring for trench wall stabilization. The pipeline and manholes would be installed directly into the trenches, and trenches would be backfilled and the asphalt street surfaces repaired. Open trenching would be employed for Reach III (approximately 1070 LF) and Reach V (approximately 267 LF).

3.1.5 Emergency by-Pass

Once construction is completed, the existing emergency temporary sewer by-pass force main will be taken off-line, and will be dissembled, removed, and disposed of with rental equipment (2 sets of emergency booster pumps) being returned to the rental company.

It is estimated that construction will take 9 months to complete, and is anticipated to begin July, 2012 and end April 2013. Figures 2 and 3 show the construction alignment and staging areas.

4 Existing Environmental Conditions

The study was initiated with a review of relevant literature on the biological resources of the project site and vicinity. Federal register listings, protocols, and species data provided by USFWS (USFWS 2011) were reviewed in conjunction with anticipated federally listed species potentially occurring at or within the vicinity of the project sites. The California Natural Diversity Database (CDFG 2011) was also reviewed for pertinent information regarding the location of known occurrences of sensitive species in the vicinity of the project sites. In addition, numerous regional floral and faunal field guides were used in the identification of species and suitable habitats. Documents consulted regarding potential on-site biological conditions are listed in the references section at the end of this report.

The project site was initially surveyed on April 02, 2011, by TDA biologist Shay Lawrey. Ms. Lawrey is an Ecologist and Regulatory Specialist that is permitted by the USFWS to survey for SWWF under her Federal 10(a) Recovery Permit (TE-094308-0). She received a B.A. in Environmental Studies from the University of California, Santa Cruz and M.S. in Biology from Occidental College. Ms Lawrey specializes in endangered species surveys. Ms. Lawrey has over a decade of SWWF and LBVI survey experience within the Mojave River. She has also conducted numerous habitat assessments and focused surveys for desert tortoise throughout San Bernardino County in the last ten years. No limitations or constraints could be identified that could influence the survey results. Surveys were conducted during the appropriate season, in preferable weather conditions, and by a qualified biologist who followed all pertinent protocols and/or guidelines.

This initial reconnaissance-level survey included general coverage of the proposed action area and staging areas, with special attention focused toward sensitive species or those habitats potentially supporting sensitive flora or fauna. Based on on-site observations of habitat types and structure, Ms. Lawrey determined that SWWF and LBVI surveys were warranted along Reach I-A of the Project and focused desert tortoise surveys were warranted within the areas of the Project where dry desert wash and creosote bush scrub habitat occurred.

Between April 15 and May 29, 2011, Ms. Lawrey conducted 100% coverage focused desert tortoise surveys, within and adjacent to the Project Area where f suitable habitat exists, according to the recommended USFWS guidelines provided in the 2010 “Pre-project field survey protocol for potential desert tortoise habitats” The survey report is provided in Appendix 1. Ms. Lawrey also conducted focused LBVI and SWWF surveys within Reach I-A of the project site pursuant to her USFWS Permit (TE-094308-0) and according to the recommended guidelines provided in the 2010 “… survey protocol for the Southwestern Willow Flycatcher: U.S. Geological Survey Techniques and Methods 2A-10, 38 p” and the 1999 “Survey Protocol for the Least Bell’s Vireo, as modified through an agreement with the USFWS. Eight LBVI surveys were conducted between April 15 and July 31, 2011 and five SWWF were conducted between May 19 and July 17, 2011. The survey report is provided in Appendix 2.

4.1 Environmental Setting

The Project area lies within a section of the Mojave River known as the Upper Narrows in the Victor Valley subregion, on the southern rim of the Mojave Desert, to the north of the San Bernardino-San Gabriel mountain ranges. The region is characterized by broad alluvial fans, old dissected terraces, playas, and scattered mountains. The Victor Valley communities occur on the broad surface of one of numerous coalescing alluvial fans and terraces, known as the Victorville Fan. This fan is a composite of alluvial deposits and soils from Pleistocene and recent times. The soils in the project area are yellowish brown, medium-grained alluvial sands, consisting of Cajon-Wasco cool complex, Bryman loamy fine sand, Lucerne sandy loam, Riverwash, and Victorville sandy loam.

Runoff from the San Gabriel and San Bernardino Mountains is the primary contributor to the surface stream flows and groundwater aquifers in the Victor Valley. The rivers and streams in the Victor Valley are dry most of the year and surface water is available only at springs and where localized geology causes rising groundwater to surface and flow above ground.
Reach I-A of the project crosses the Mojave River which is the largest drainage system in the Mojave Desert. The river's source is in the San Bernardino Mountains, south of Hesperia. The West Fork of the Mojave flows into Silverwood Lake, formed by Cedar Springs Dam, which overflows in the Mojave River Forks Reserve area. Downstream, Deep Creek meets the West Fork, forming the Mojave River immediately upstream of the Mojave River Dam. Downstream of the dam, the Mojave River flows north and east, underground in most places, through Hesperia, Victorville, Barstow out to its terminal location at Soda Lake.

The local climatic conditions in the project area are characterized by hot summers, mild winters, infrequent rainfall, and dry humidity. The average annual temperature is 62°F, with averages ranging between 35-97°F. The rainy season begins in November and continues through March, with the quantity and frequency of rain varying from year to year. The average annual rainfall is approximately 3.4 inches with a range of 1.1 to 11.2 inches. Surrounding land uses include vacant land, open space, pasture range land, residential development, recreational parks, education facilities and major arterial roads.

4.2 Vegetation Communities

The vegetation within the Mojave River, where Reach I-A of the project is located, is in various seral stages and generally consists of tall, multilayered, open canopy riparian forest. The dominant vegetative species within this riparian forest include Fremont cottonwood species (*Populus fremontii),* black willow (*Salix goodingii*), narrow-leved willow (*Salix exigua*), arroyo willow (*Salix lasiolepis*), red willow (*Salix laevigata*), mulefat (*Baccharis salicifolia*), sycamore (*Platanus recemosa)* and elderberry *(Sambucus mexicana).* The dense riparian stands consist of an intricate three to four story canopy structure, with trees standing approximately 40, 25, and 12 feet tall with over 85 percent vegetative cover. The under story consists of cattail (*Typha latifolia*) and other native herbaceous riparian plants.

Outside of the Mojave River floodplain area, the primary vegetation communities in the project area can be characterized as dry desert wash, creosote bush scrub, alkali desert scrub, pasture, and ruderal. Vegetation here is typical of many locations in the southwestern Mojave Desert, with elements of both desert and foothill vegetation. Perennial plants included creosote bush (*Larrea tridentada*), California buckwheat *(Eriogonum fasciculatum),* allscale (*Atriplex polycarpa*), cheese bush (*Hymenoclea salsola*), linear-leaf goldenbush *(Ericameria linearifolius),* rubber rabbitbrush *(C. nauseosus),* Anderson's box-thorn *(Lycium andersonii),* peachthorn *(L. cooperii),* spiny hopsage *(Grayia spinosa),* and desert needlegrass *(Achnatherum speciosum).* Annual plants detectable at the time of surveys included sticky sand blossoms *(Linanthus parryae),* California coreopsis *(Coreopsis californica),* Pringle's woolly daisy *(Eriophyllum pringlei),* common tidy tips *(Layia platyglossa),* Mojave sun-cups *(Camissonia campestris),* little gold-poppy *(Eschscholzia minutiflora),* purple desert lupine *(Lupinus schockleyi),* and desert

dandelion *(Malacothrix glabrata)*. Other annuals observed were exotic, invasive species, such as split grass *(Schismus* sp.), shortpod mustard *(Hirschfeldia incana),* tumble mustard *(Sisymbrium altissimum)*, sisymbrium *(S. orientale),* hare barley *(Hordeum murinum),* red brome *(Bromus madritensis* ssp. *rubens),* and cheat grass *(B. tectorum),* or native plants adapted to disturbance, such as red-stemmed filaree *(Erodium cicutarium),* fiddleneck *(Amsinckia tessellata),* and Lemmon's lessingia *(Lessingia lemmonii).*

The staging areas are either completely devoid of vegetation or are heavily disturbed.

5 Species/Critical Habitat Considered

The following section provides a summary of those federal listed and proposed species and critical habitats known to occur within the vicinity of the project site. An impact analysis and recommended avoidance measures are provided for activities that may result in direct and/or indirect impacts to listed species or critical habitat.

5.1 Potential Project-Related Impacts on Federally or State Listed Species

No plants listed as threatened or endangered or proposed under the ESA have been reported in the immediate vicinity of the project site (Victorville 7.5-minute USGS quadrangle; CDFG 2011). There are however, three (3) federal listed wildlife species reported in locally. These species are the SWWF, LBVI and desert tortoise. In addition to local sightings and records, suitable habitat for these species occurs within the near vicinity of the project site (CDFG 2011; USFWS 2011).

Based on background research of federally listed threatened and endangered species known to occur within the vicinity of the project site and habitats documented within and/or adjacent to the project site, SWWF, LBVI and desert tortoise have the potential of being directly and/or indirectly impacted as a result of project initiation. No other federally listed plant or animal species has the potential to occur in the project area (Table 2)

5.1.1 Southwestern Willow Flycatcher

The SWWF is a small passerine bird that has a grayish-green back and wings, whitish throat, a light gray-olive breast, and pale yellowish belly. It has two visible white wing bars and a faint or absent eye ring. The call consists of a repeated “whit” and their song is a sneezy “fitz-bew.” (60 FR 10694) The SWWF is currently one of the four recognized subspecies of the willow flycatcher. This flycatcher is a neotropical migrant that breeds in the southwestern United States from mid-April to early-September. In the fall, it migrates south to its wintering grounds in portions of South America, Central America and Mexico. (60 FR 10694)

A rapid decrease in the numbers of SWWF in California and other southwestern states prompted the USFWS to designate it as a Category 1 candidate species in 1991. On July 23, 1993 the southwestern willow flycatcher was proposed for listing as endangered by the USFWS

and was then listed as Federally endangered on February 27, 1995, under the ESA. The USFWS designated critical habitat for the species on July 22, 1997. This habitat includes 18 units with a total of 599 miles of river in California, New Mexico, and Arizona (62 FR 39129). On May 11, 2001, the critical habitat designation from 1997 was struck down by the U.S. 10th Circuit Court of Appeals which required further economic analysis. A recovery plan was finalized by USFWS in March of 2003. Critical habitat designations for this species were re-proposed and finalized October 19, 2005 (70 FR 60885 61009).

The SWWF breeds in dense riparian habitats along rivers, streams, and other wetlands. They have been documented to establish territories in elevations ranging from sea level to 8,500 feet (Sogge 1997). Plant species closely associated with the SWWF include willows, boxelder (*Acer negungo*), seepwillow (*Baccharis* spp.), with an overstory of cottonwood (62 FR 39129). Occupied habitat is generally dominated by shrubs and trees 13 to 23 feet or more in height, which provide dense lower and mid-story vegetation approximately 13 feet aboveground. This dense vegetation is often interspersed with open water, small openings, or sparse vegetation, creating a mosaic that is not uniformly dense (62 FR 39129).

5.1.2 Least Bell's Vireo

The LBVI is a small, olive-gray migratory songbird that nests and forages almost exclusively in riparian woodland habitats. Bell's vireos are highly territorial and are almost exclusively insectivorous. LBVI nesting habitat typically consists of well developed overstory, understory, and low densities of aquatic and herbaceous cover. The understory frequently contains dense sub-shrub or shrub thickets. These thickets are often dominated by plants such as narrow-leaf willow, mulefat, young individuals of other willow species such as arroyo willow or black willow, and one or more herbaceous species. LBVI generally begin to arrive from their wintering range in southern Baja California and establish breeding territories by mid-March to late-March. A large majority of breeding vireos apparently depart their breeding grounds by the third week of September and only a very few have been found wintering in the United States.

The explanations for the drastic decline of this species are various; however the two prevailing factors are habitat loss and brown-headed cowbird (*Molothrus ater*) brood parasitism (Kus 1998; Sogge et al. 1997). LBVI construct open cup nests low in the riparian canopy, which may cause them to be more vulnerable to brood parasitism compared to larger passerines that nest higher in the canopy. The loss of and degradation of riparian habitats have both occurred due to urban and agricultural development, fire, water diversion and impoundment, channelization, livestock grazing, off-road vehicle use and recreation, replacement of native habitats by introduced plant species, and hydrological changes resulting from these and other land uses. LBVI was first proposed for listing as endangered by the USFWS on May 3, 1985, (50 FR 18968) and was subsequently listed as federally endangered on May 2, 1986 (60 FR 10694). Critical habitat units were designated by the USFWS on February 2, 1994 (59 FR 4845) and included reaches of ten streams in six counties in southern California and the surrounding approximately 38,000 acres. The critical habitat units exist in the Santa Ynez River, Santa Clara River, Santa Ana River, Santa Margarita River, San Luis Rey River, Sweetwater River, San Diego River, Tijuana

River, Coyote Creek, and Jumul-Dulzura Creek. No critical habitat designated for LBVI occurs in the project area.

Although LBVI use a variety of riparian plant species for nesting, it appears that the structure of the vegetation is more important than other factors such as species composition or the age of the stand. LBVI begin to arrive at their breeding grounds in southern California riparian areas from mid-March to early April. Upon arrival, males establish breeding territories that range in size from 0.5 to 7.4 acres, with an average size of approximately 2 acres. After pair formation, vireos construct a hanging cup nest made up of dried plant material. Nests are usually placed in forks of branches between 2 and 5 feet from the ground. Females lay two to five eggs with both parents incubating the clutch for approximately 14 days and the young fledging after 10 to 12 days. The fledglings will remain in the parental territory for up to a month. In southern California LBVI leave the breeding grounds and migrate south mid to late September.

5.1.3 Desert Tortoise

The desert tortoise is listed as a federally threatened species. Throughout its range it is threatened by habitat loss, domestic grazing, predation, collections, and increased mortality rates. Critical habitat for the desert tortoise was designated on February 8, 1994 (FR 59 5820 5866). The project site is not located within designated critical habitat. The desert tortoise is typically found in creosote bush scrub. They are most often found on level ground where the substrate is firm but not too rocky. Tortoise burrows are typically found at the base of shrubs, in the sides of washes and in hillsides. Recent activity at tortoise burrows may be indicated by footprints, fresh dirt on the apron of the burrow, fresh scat, crushed vegetation or recently exposed roots in the burrow wall. Tortoise scat is very distinctive and may remain on the desert floor for many years. General estimates of the age of tortoise scat can be made based upon sun bleaching and moisture levels. Home ranges for desert tortoise vary, depending upon the size and sex of a tortoise as well as the availability of food and shelter. According to the CDFG, information on the western Mojave population of desert tortoise, home range typically varies from 5 to 38 acres. Neonatal tortoises can travel up to 1-3 miles after hatching (Becky Jones-CDFG, pers. comm.). Because a single tortoise may have many burrows distributed throughout its home range, it is not possible to predict exact numbers of individuals on a site based upon burrow numbers.

In 1992 the US Bureau of Land Management issued the California Statewide Desert Tortoise Management Policy which included categorizing habitat into three levels of classification. The management goal for Category I areas is to maintain stable, viable populations and to increase the population where possible. The management goal for Category II areas is to maintain stable, viable populations. The management goal for Category III areas is to limit population declines to the extent feasible. The entire project occurs in desert tortoise habitat designated as Class II.

5.2 Potential Project-Related Impacts on Federally Designated Critical Habitat

Critical Habitat is designated by USFWS for some threatened and endangered species. The portion of the project, where HDD under the river is proposed, is mapped within SWWF critical habitat. The proposed action would not result in the destruction or adverse modification of USFWS designated critical habitat for SWWF. The proposed action within critical habitat boundaries consists of HDD that would be conducted underneath the Mojave River and as such, will not impact SWWF critical habitat.

6 Effects Analysis

The following section provides an assessment of direct, indirect, and cumulative impacts to SWWF, LBVI and desert tortoise by the proposed action.

6.1 Approach

This analysis characterizes the project-related activities that are anticipated to adversely impact the species, and, when feasible, quantifies such impacts. Direct effects are defined as actions that may cause an immediate effect on the species or its habitat, including the effects of interrelated actions and interdependent actions. Indirect effects are caused by or result from the proposed action, are later in time, and are reasonably certain to occur. Indirect effects may occur outside of the area directly affected by the proposed action. Cumulative impacts refer to incremental, individual environmental effects of two or more projects when considered together. These impacts taken individually may be minor but may be collectively significant. Cumulative effects include future local or private actions that are reasonably certain to occur in the proposed action area considered in this BA. However, unlike the National Environmental Policy Act (940 Code of Federal Regulations 1508.7), under Section 7 of the federal ESA, cumulative effects analyses are limited to future local actions that are reasonably certain to occur within the action area prior to the completion of the proposed action. Future federal actions unrelated to the proposed action are not considered since they require separate consultation pursuant to Section 7 of the ESA. A cumulative impact to biological resources may occur if a project has the potential to degrade the quality of the environment, substantially reduce the habitat of wildlife species, or cause a population to drop below self-sustaining levels, thereby threatening to eliminate a plant or animal community, or reduce the number or restrict the range of a rare or endangered plant or animal species.

6.2 Impact Analysis

Effects of the proposed action refer to the direct and indirect effects of the proposed action on SWWF, LBVI, desert tortoise or critical habitat.

6.2.1 Southwestern Willow Flycatched

Based on the focused survey results (Appendix 2), SWWF are absent from the project area (specifically Reaches I-A and I-B) and, as such, **no** direct or indirect impact to this species would result from this project. Negative survey results are valid for one year (surveys were conducted between April and July 2011). Since construction will not be complete by April 2012, protocol SWWF surveys will be conducted again in 2012, in order to not miss a survey window. If SWWF is found during the follow-up 2012 surveys, then consultation with the USFWS may be required.

No above-ground work would occur within riparian habitat. The only above-ground work within Reaches I-A and I-B would occur at the HDD portals, Bore and Jack, staging areas, and open trench construction located outside of the riparian habitat boundaries. Given that no work would occur in areas where SWWFI can occur, **no** direct impacts to SWWF would result.

6.2.2 Southwestern Willow Flycatcher Critical Habitat

There would be **no** direct or indirect impact to SWWF critical habitat. The HDD portals, access roads, and staging/stockpile areas for Reaches I-A and I-B are not located within the riparian habitat areas where SWWF critical habitat is mapped and designated. Furthermore, no riparian habitat would be removed as part of this project.

6.2.3 Least Bell's Vireo

Based on the focused survey results (Appendix 2), LBVI are present within close proximity of Reaches I-A and I-B. No above-ground work will occur within riparian habitat. The only above-ground work within Reaches I-A and I-B will occur at the HDD portals, Bore and Jack, staging areas, and open trench construction located outside of the riparian habitat boundaries. Given that no work will occur in areas where LBVI can occur, **no** direct impacts to LBVI will result.

At this time, there is no specified construction schedule for the above-ground construction activities within Reaches I-A and I-B. Therefore, the potential for indirect impacts to LBVI impacts vary depending timing.

1. If no above ground construction activities occur within Reaches I-A and I-B between March 15 and September 1, then **no** indirect impacts to LBVI would result.
2. If above-ground construction does occur within Reaches I-A and I-B between March 15 and September 1, then indirect noise and vibration impacts to LBVI **may** occur. Elevated noise levels can potentially mask songs of the least Bell's vireo, which are used to attract mates and defend territories. It has been estimated that noise levels above 60 dBA Leq in LBVI breeding areas may affect the reproductive success of this species during its breeding season (Barrett, 1997). The USFWS has adopted 60 dBA Leq as the threshold for the LBVI during their breeding season and requires project-related noise levels to be below this threshold.

6.2.4 Desert tortoise

As stated above, the only above-ground work within Reaches I-A and I-B will occur at the HDD portals, Bore and Jack, staging/stockpile areas and open trench construction. A total of 1.7 acres of previously disturbed land (1 acre on the west and 0.7 acre on the east) will be used for staging, portal access and stockpiling. Based on the focused survey results (Appendix 1), desert tortoise are absent from these areas as well as the overall project area and, as such, **no** direct or indirect impact to this species will result from this project. Depending on the project location, desert tortoise surveys are valid for one to three years. Typically, negative survey results are valid for one year . However, survey validity beyond one year for negative results can be granted by the USFWS.

6.3 Cumulative Impacts Analysis

No nonfederal (state or private) projects are proposed within the immediate vicinity of the project area (Upper Narrows). Any future nonfederal projects within the Upper Narrows of the Mojave River would warrant consultation with USFWS (federal authorization) if an incidental take permit or habitat conservation plan was required for project related impacts to federally listed species. The direct and/or indirect impacts of the proposed action are not expected to result in significant cumulative impacts to environmental resources within the region of the project action area.

7 Conservation Measures

The following section outlines general and species-specific avoidance and minimization measures (conservation measures) that will be implemented for all project-related activities associated with the proposed action. These conservation measures are expected to minimize and avoid impacts to federally listed species and designated critical habitat.

7.1 Biological Monitoring

An approved biological monitor will be retained by VVWRA. At least 7 days prior to initiating project activities, the VVWRA will submit in writing the name(s), permit numbers, and resumes of all proposed biological monitors to the USFWS. Project-related ground disturbance shall not begin until a biological monitor has been approved by the USFWS, who will issue approval within a week.

During construction, if there is to be any vegetation clearing, the biological monitor will conduct a pre-construction survey of the work area to ensure that no sensitive species are present. The biological monitor will be onsite during vegetation clearing and will conduct weekly site inspections during the remainder of construction. The purpose of the inspections is to ensure that work activities are being conducted within the defined work envelope and that no sensitive species are being impacted by those work activities. The biological monitor will have the authority to halt or suspend any project-related activities that are not in compliance with federal laws.

The biological monitor will conduct environmental orientation meetings for all construction personnel, including temporary contractors that include: a) a description of habitats on the project site; b) the limits of construction; c) the conservation measures to be implemented in conjunction with project construction; and d) laws and regulations that protect the species.

7.2 Defined Work Limits

All project activities will be limited to a well-defined area. Prior to construction activities the limits of disturbance will be clearly marked with stakes and orange construction barrier fencing.

7.3 Avoidance and Minimization

If feasible, above-ground construction within Reaches I-A and I-B will avoid the bird nesting season, between March 15 and September 1. It may not be possible however, to completely avoid the bird nesting season (March 15 through September 1). As stated above in Section 8.2.2 protocol SWWF surveys will be conducted again within Reaches I-A and I-B in 2012 in order to not miss a survey window. Protocol level LBVI surveys will also be conducted in 2012 within 500 ft of the construction footprint (HDD portals, Bore and Jack portals).

If an LBVI territory is identified within 50 feet of the construction footprint, then the active construction noise levels will be monitored. If noise levels exceed the identified threshold of 60 dBA Leq within 50 ft. of an active LBVI territory, then appropriate noise abatement measures will be implemented. Construction noise will be minimized through installation and use of noise-reducing equipment in all construction vehicles, and reducing speed limits for travel within the Mojave River floodplain to10 miles per hour (mph). In the event that noise is consistently greater than 60 dBA Leq within 50 feet of a LBVI territory, sound barriers may be erected in the work area in discrete locations, around the specific stationary equipment such as the HDD drill rig, the Jack & Bore pits, and the tunnel pits, to allow construction to proceed within a buffer zone.

7.4 Reporting

The biological monitor will submit a final report to FEMA, the VVWRA, and the USFWS within 60 days of project completion documenting that authorized impacts were not exceeded and general compliance with all conservation measures. The final report will summarize the results of the monitoring efforts.

As required by law, FEMA, the VVWRA, and USFWS will be notified if an unauthorized take of a listed species occurs. Construction in the area of the find would cease until clearance has been granted by the USFWS. A written notification would also be prepared after verbal notification to the USFWS by FEMA. The report would include the date, time and location of the discovered listed species individual , suspected cause of injury or death, and any other pertinent information. The biological monitor shall preserve the dead specimens for submission to educational/research institutions with the appropriate federal permits.

8 Conclusions and Determination of Effects

Following the review of baseline conditions of the project site, current LBVI, SWWF and desert tortoise statuses in the region, implementation of the conservation measures, and temporary nature of the impacts associated with the proposed action, the effects of the proposed action are as follows:

- No effect to SWWF;
- No effect to SWWF critical habitat;
- Not likely to adversely affect LBVI;
- No effect to desert tortoise.

The proposed action will not result in the permanent loss of SWWF, LBVI or desert tortoise habitat. Obligations to Section 7 of the federal ESA will be reconsidered if (1) new information reveals impacts of the proposed action that may affect any listed species of critical habitat in a manner not previously considered, (2) the proposed action is subsequently modified in a manner that was not considered in this BA, or (3) a new species is listed or critical habitat is designated that may be affected by the proposed action.

9 Literature Cited

Barrett, D.E., 1997. "Traffic-Noise Impact Study for Least Bell's Vireo Habitat along California State Route 83" Transportation Research Record 1559. The study and its implications were reviewed in *U.S. Roads*, http://environment.transportation.org/environmental_issues/construct_maint_prac/compendium/manual/3_13.aspx#tooltip

Berry, K. H., T. Shields, A. P. Woodman, T. Campbell, J. Roberson, K. Bohuski, and A. Karl. 1986. Changes in desert tortoise populations at the Desert Tortoise Research Natural Area between 1979 and 1985. Proc. Desert Tortoise Council Symp. 1986:100–123.

California Burrowing Owl Consortium, 1993. Burrowing Owl Survey Protocol and Mitigation Guidelines.

California Department of Fish and Game. 1995. Staff report on burrowing owl mitigation. Memo from C.F. Raysbrook, Interim Director to Biologist, Environmental Services Division, Department of Fish and Game. Sacramento, CA.

California Department of Fish and Game (CDFG), 2011. RareFind 3 Version 3.1.0, California Natural Diversity Data Base, California. Accessed on April 13, 2011.

California Native Plant Society (CNPS), 2011. Inventory of Rare and Endangered Plants of California. Rare Plant Scientific Advisory Committee, David P. Tibor, Convening Editor. California Native Plant Society. Sacramento, California. Available at: http://www.cnps.org/inventory. Accessed on April 13, 2011.

Hickman, J. C. (ed.). 1993. The Jepson Manual. Higher Plants of California. University of California Press, Berkeley and Los Angeles, California. 1400 pp.

Holland, V.L. and Keil, David J. 1990. California Vegetation, 4th ed. El Corral Publications, San Luis Obispo, California.

Kus, B. 2002. Least Bell's Vireo (*Vireo bellii pusillus*). *In* The Riparian Bird Conservation Plan: a strategy for reversing the decline of riparian-associated birds in California. California Partners in Flight. http://www.prbo.org/calpif/htmldocs/riparian_v-2.html

Natural Resources Conservation Service (NRCS, 2007). Web Soil Survey. Map Unit Descriptions. San Bernardino County Area, California. Available at: http://websoilsurvey.nrcs.usda.gov/app/HomePage.htm. Accessed on April 01, 2011.

Phil Leitner. Mohave Ground Squirrel, © 1999. August 5, 2004. http://www.tortoise-tracks.org/denizens/mgs.html

Sogge, M.K., Ahlers, Darrell, and Sferra, S.J., 2010, A natural history summary and survey protocol for the Southwestern Willow Flycatcher: USGS Techniques and Methods 2A-10, 38 p

U.S. Bureau of Land Management. 1980. The California Desert Conservation Area Plan. U.S. Bureau of Land Management, Riverside, California. 173 pp.

U.S. Bureau of Land Management and California Department of Fish and Game. 1988. A Sikes Act Management Plan for the Desert Tortoise Research Natural Area and Area of Critical Environmental Concern. U.S. Bureau of Land Management, Ridgecrest, California. 43 pp. + unpaginated appendices.

U.S. Bureau of Land Management. 1989. Map produced by BLM for the California Desert Conservation Area, dated January 1989, showing desert tortoise Category I, 2, and 3 Habitats in California.

U.S. Bureau of Land Management. 2005. Final Environmental Impact Report and Statement for the West Mojave Plan, a Habitat Conservation Plan and California Desert Conservation Area Plan Amendment. Moreno Valley, CA.

U.S. Fish and Wildlife Service. 1994. The desert tortoise (Mojave population) recovery plan. U.S. Fish and Wildlife Service, Region 1, Lead Region, Portland, Oregon. 73 pp. + appendices.

U.S. Fish and Wildlife Service. I994a. Endangered and threatened wildlife and plants; determination of critical habitat for the Mojave population of the desert tortoise. Federal Register 55(26):5820-5866. Washington, D.C.

U.S. Fish and Wildlife Service 1994. Final Determination of Critical Habitat for the Least Bell's Vireo (*Vireo bellii pusillus*); Final Rule. 59 FR 4845

U.S. Fish and Wildlife Service 1994. Final Determination of Critical Habitat for the Least Bell's Vireo (*Vireo bellii pusillus*); Final Rule. 59 FR 4845

U.S. Fish and Wildlife Service 1999. Least Bell's Vireo Survey Guidelines. Issued by the Carlsbad Fish and Wildlife Office. April 8, 3 pp.

U.S. Fish and Wildlife Service 1998. Draft recovery plan for the least Bell's vireo. U.S. Fish and Wildlife Office. April 8 3 pp

U.S. Fish and Wildlife Service 2005. Final Determination of Critical Habitat for the Southwestern Willow Flycatcher (Empidonax traillii extimus); Final Rule. 70 FR 60885 61009.

U.S. Fish and Wildlife Service. 2010. Preparing for any action that may occur within the range of the desert tortoise. Ventura, CA.

U.S. Fish and Wildlife Service. July 18, 2011: Species list for the proposed federal action.

U.S. Department of Agriculture. 1971. Soil Survey of Western San Bernardino Area, California. Soil Conservation Service, Washington, D.C.

10 List of Contacts Made and Preparers

Alessandro Amaglio, Regional Environmental Officer
DHS – FEMA Region 9
1111 Broadway, Suite 1200
Oakland, CA 94607-4052
(510) 627-7284

Morgan Griffin, Deputy Regional Environmental Officer
DHS – FEMA Region 9
1111 Broadway, Suite 1200
Oakland, CA 94607-4052
(510) 627-7033

Daniel Langmaid, Environmental Protection Specialist
DHS – FEMA Region 9
1111 Broadway, Suite 1200
Oakland, CA 94607-4052
(510) 627-7771

Luanne Bean M.S., P.E., Manager, Construction Management Group
Tetra Tech, Inc
17885 Von Karman Avenue, Suite 500
Irvine, CA 92614-6213
(949)809-5179

Carl Benz, Assistant Field Supervisor
U.S. Fish and Wildlife Service
2493 Portola Road, Suite B
Ventura, CA 93003
(805) 644-1766

Shannon Pankratz, Regulatory PM
U.S. Army Corps of Engineers, Regulatory Division
915 Wilshire, Suite 13060
Los Angeles, CA 90017
(213) 452-3412

Eric Weiss, Environmental Scientist
California Department of Fish and Game, Region 6
3602 Inland Empire Blvd., Suite C-220
Ontario, CA 91764
(909) 980-8607

Logan Olds, General Manager
Victor Valley Wastewater Reclamation Authority
15776 Main Street, Suite 3
Hesperia, CA 92345
(760) 948-9849, ext. 110

Shay Lawrey, Ecologist/Regulatory Specialist
Tom Dodson & Associates
2150 N. Arrowhead Avenue
San Bernardino, CA 92405
(909) 882-3612

FIGURES

Figure 1a. Regional Location Map

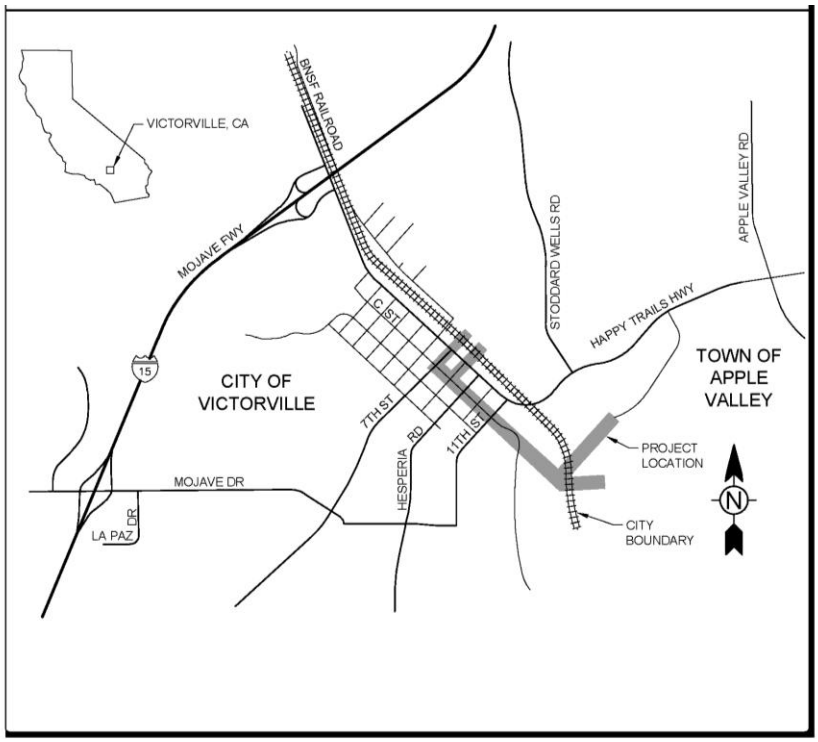

Figure 1b. Location Map

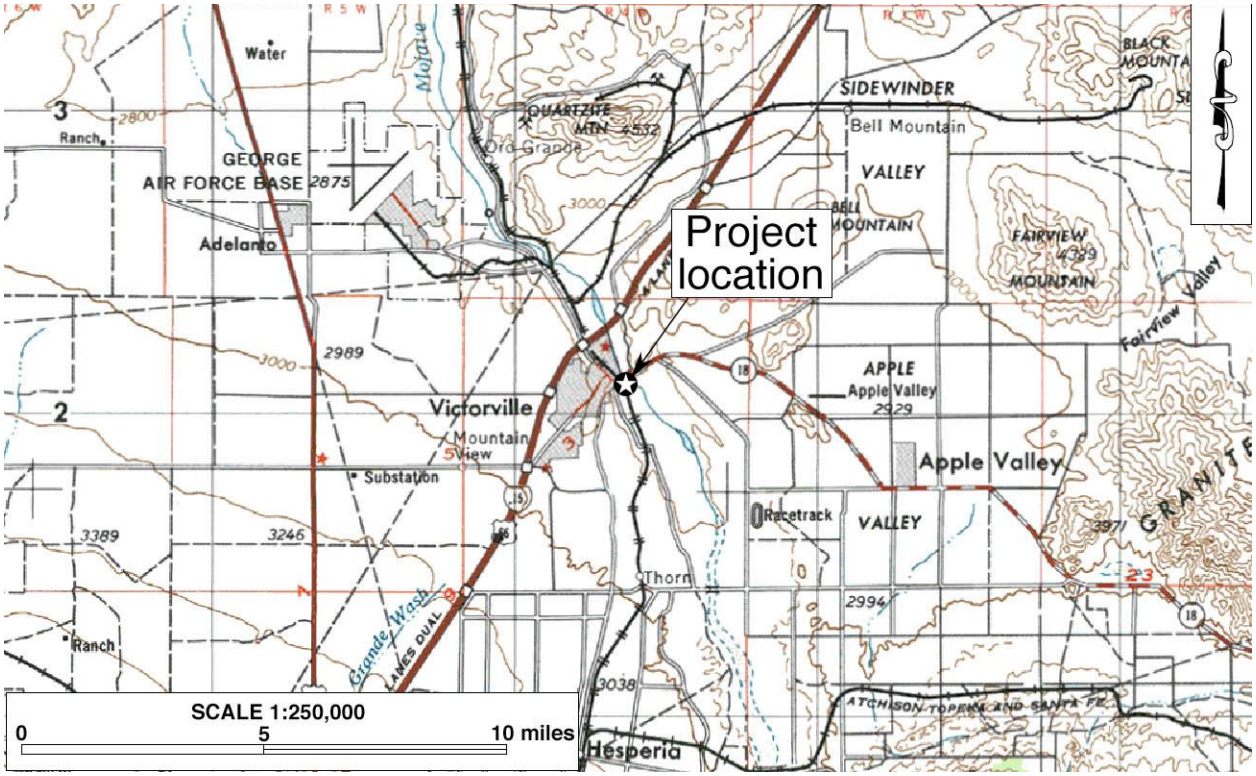

Figure 2. Project Site Map

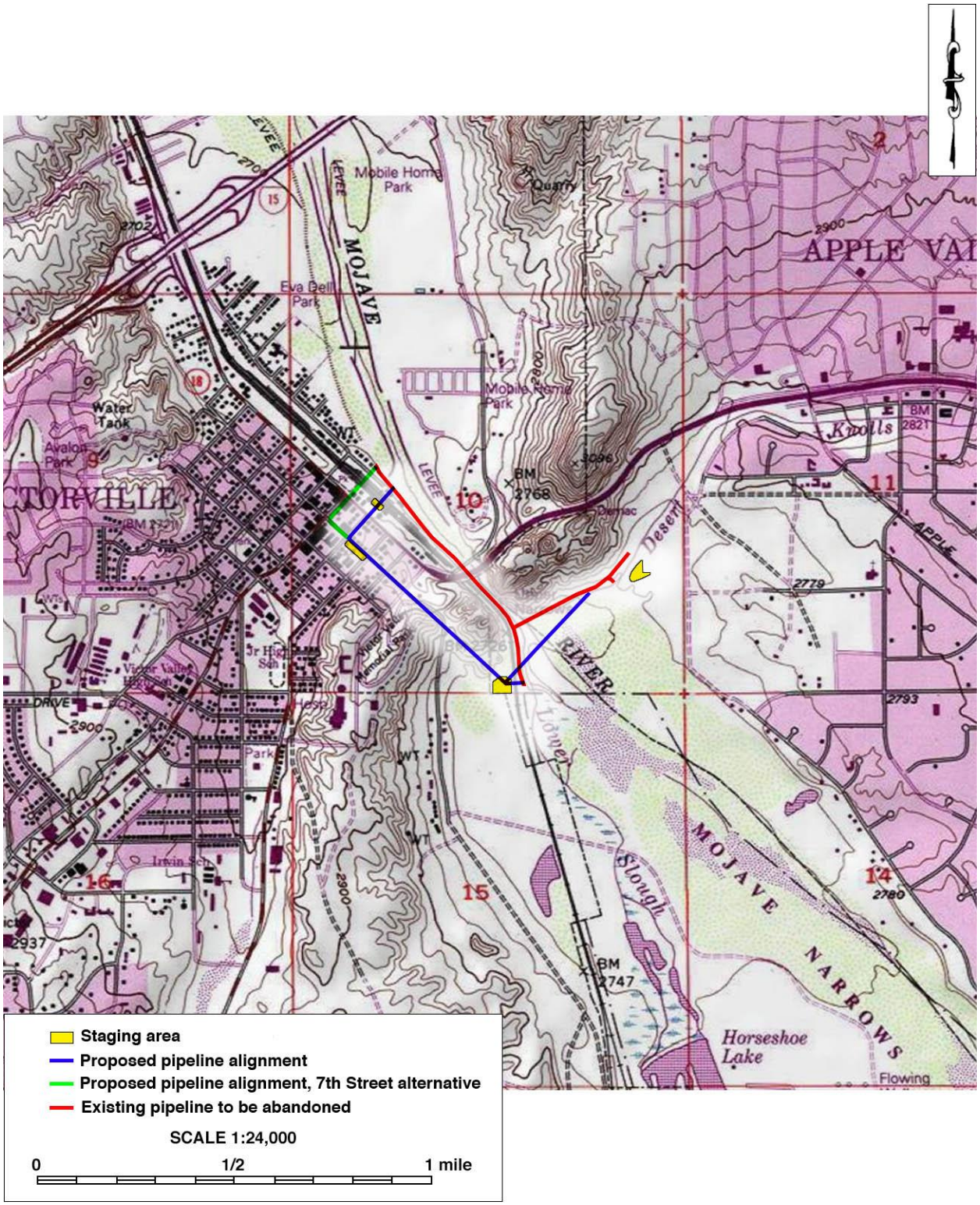

Figure 3. Aerial View of Project Area

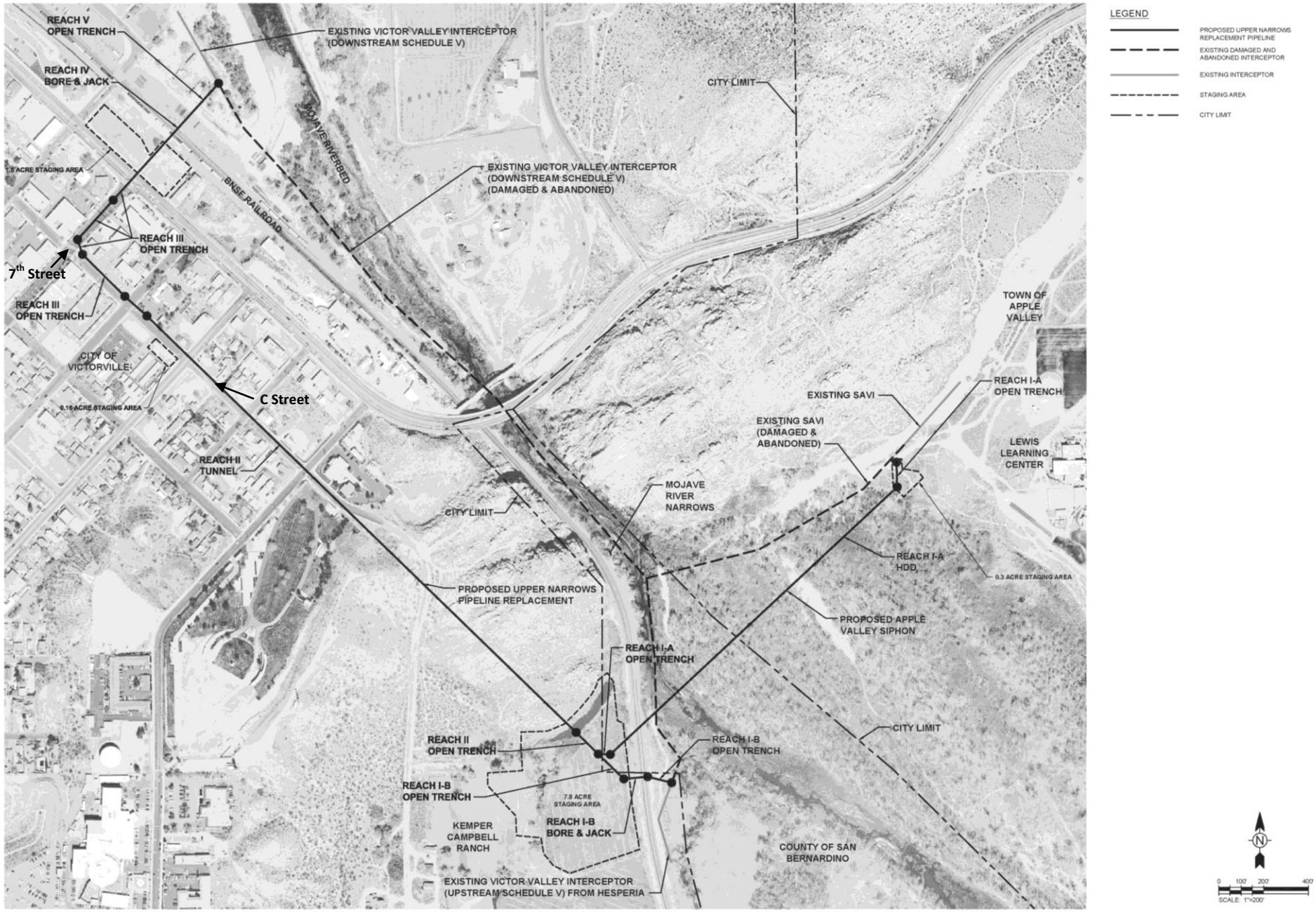

TABLES

Table 1. USFWS list of federally listed species potentially occurring in project area

Common Name	Scientific Name	Status	Found Locally	Found in Project Area	Critical Habitat
Reptiles:					
Desert Tortoise	*Gopherus agassizii*	FT	Yes	No	No
Birds:					
Least Bell's Vireo	*Vireo bellii pusillus*	FE	Yes	Yes	No
Southwestern Willow Flycatcher	*Empidonax traillii extimus*	FE	Yes	No	Yes

STATUS CODES:
U.S. Fish and Wildlife Service
FE = Listed as Endangered by the Federal Government
FT = Listed as Threatened by the Federal Government

Source: USFWS reply letter and species list dated July 18, 2011

Table 2. California Natural Diversity Database List of Federally Listed Species Occurrence Potential within Project Area

Scientific Name / Common Name	**Status**	**Preferred Habitat**	**Presence of Suitable Habitat w/in Project area?**	**Occurrence Potential**
Empidonax traillii/ Southwestern Willow Flycatcher	E	Inhabits extensive thickets of low, dense willows on edges of wet meadows, ponds, or backwaters between 2000-8000 elevations.	This species has been detected in the past at the Upper narrows.	Moderate. Species not found during protocol surveys.
Rana Aurora draytonii/ California Red-legged Frog	T	Occurs in or near permanent sources of deep water with dense, shrubby or emergent riparian vegetation in the lowlands and foothills. Requires 11-20 weeks of permanent water for larval development and estivation habitat.	Suitable habitat present.	Very low. Project is outside of species current range.
Gopherus agassizii/ Desert Tortoise	T	Most common in desert scrub, desert wash, and Joshua tree habitats, but occurs in almost every desert habitat. Requires friable soil for burrow and nest construction, and prefers Creosote bush habitat with large annual wildflower blooms.	Yes. No records of DT in project area. Nearest local record is in the vicinity of Shay Road.	This species was not observed on site during a protocol survey for presence/absence. Occurrence potential is low.
Vireo bellii pusillus/ Least Bell's vireo	T	Inhabits extensive thickets of low, dense willows on edges of wet meadows, ponds, or backwaters between 2000-8000 elevations.	Yes.	Present.

Coding and Terms	
E= Endangered	T = Threatened

Source: 2011 CNDDB Rarefind 3 Victorville Quadrangle.

APPENDIX 1

General Biological Resources Assessment & Focused Desert Tortoise Survey

General Biological Resources & Focused Desert Tortoise Survey Report for the Upper Narrows Interceptor Replacement Project

Section10 of Township 5S and Range 5N of the U.S. Geological Survey
Victorville Quadrangle, San Bernardino County, California

Prepared for:

Victor Valley Wastewater Reclamation Authority
15776 Main Street, Suite 3
Hesperia CA 92345
Contact Person: Logan Olds, General Manager
Phone Number: (760) 948-9849x110

Prepared by:

Tom Dodson & Associates
2150 North Arrowhead Avenue
San Bernardino, California 92405
Contact Person: Shay Lawrey
Phone Number: (909) 882-3612

Certification: I hereby certify that the statements furnished herein, and in the attached exhibits present data and information required for this Biological Survey to the best of my ability, and the facts, statements, and information presented are true and correct to the best of my knowledge and belief. This report was prepared in accordance with professional requirements and recommended protocols for general and focused biological studies

Shay Lawrey
Surveys Conducted between April 18 & August 18, 2011
Report Date: September 28, 2011

TABLE OF CONTENTS

1. Summary & Findings 1
2. Introduction & Methods 2
3. Results 3
   3.1. Common flora 3
   3.2. Common fauna 4
   3.3. Special Status Species 4
      3.3.1. Desert tortoise 4
      3.3.2. Burrowing owl 5
      3.3.3. Mohave ground squirrel 5
      3.3.4. Other Special-Status Species 5
4. Conclusions 6
5. Recommendations 6
6. References 8

Figures *(located at the end of the document)*

Figure 1. Location Map
Figure 2. Project Site Location
Figure 3. Focused Desert Tortoise Survey Areas

Site Photos *(located at the end of the document)*

Appendices

Appendix 1. Floral Compendium
Appendix 2. Fauna Observed

1. Summary & Findings

The Victor Valley Wastewater Reclamation Authority (VVWRA) has applied for Federal financial assistance (Federal action) from FEMA through the California Governor's Office of Emergency Services (OES), to permanently replace damaged wastewater conveyance facilities. Specifically, a main sewer interceptor line located under the Mojave River was damaged during recent winter storms. This natural disaster contributed to the presidential disaster declaration FEMA-1952-DR-CA: "Severe Winter Storms, Flooding, and Debris and Mud Flows" which occurred from December 17, 2010, to January 4, 2011. FEMA is proposing to fund the project under disaster relief that was implemented in response to this presidential disaster declaration FEMA-1952-DR-CA.

A significant storm event occurred in the Victor Valley subregion and San Bernardino County, beginning the week of December 19, 2010. As a result of the devastating rains, the VVWRA sustained damage to the sewer interceptor under the Mojave River, in a section of the river with extremely limited access known as the Upper Narrows. The sewer pipeline breach was discovered on December 29, 2010. VVWRA immediately began work to create an emergency sewer force main to bypass the breach in the damaged sewer interceptor, and divert the wastewater by constructing an emergency and temporary bypass pipeline lines and 2 booster pumping stations. Additionally, the force of the river flow resulting from the storm event was so great that the exposed manholes (MH) along the damaged sewer interceptor within the Mojave River (estimated to be between MH 5-1 to MH 5-8 which conveys flows from Hesperia and the City of Victorville known as Schedule V Pipeline, and MH 1 to MH 4 which conveys flows from the town of Apple Valley and portions of the San Bernardino County known as the SAVI pipeline) became tilted, causing further damage to the pipeline and manholes. Sand, sediment and debris entered the pipeline at the ruptured areas and eventually cemented in-place naturally.

As a result of the heavy river flows due to the storm, the existing Mojave River gravity sewer interceptor was damaged beyond repair and must be replaced between Manhole (MH) 5-1 to MH 5-8 on the Schedule V reach and MH 1 to MH 4 on the SAVI reach. Reconnaissance of the damage was performed via pipeline cleaning and sonar; this confirmed which portions of pipeline were damaged beyond repair and must be replaced in order to restore the function of the existing gravity sewer line interceptor.

The project area lies within a section of the Mojave River known as the Upper Narrows in the Victor Valley subregion, located in southwestern San Bernardino County, California. The project area can be found on the U.S. Geological Survey (USGS) 7.5 Minute Series topographic map of the Victorville Quadrangle within Township 5 South, Range 5 North (Refer to Figures 1-2 located at the end of the document).

On April 4, 2011, a reconnaissance-level biological survey was conducted to determine the occurrence potential for several sensitive species within or adjacent to the project. Based on the results of the reconnaissance survey, follow-up focused surveys for southwestern willow flycatcher (SWWF) [*Empidonax traillii extimus*], least Bell's vireo (LBVI) [*Vireo bellii pusillus*] and desert tortoise (*Gopherus agassizii*) were recommended in certain areas of the project, where suitable habitat for these species exists. The SWWF and LBVI focused survey report was prepared under separate cover. This report relays the findings of the general biological resources assessment and focused desert tortoise survey.

No sign of desert tortoise or desert tortoise individuals were found during survey. Based on the absence of desert tortoise sign on-site and in adjacent areas, desert tortoises are considered absent from the project area. As such, no impacts are anticipated.

Based on the field survey and habitat assessment none of the following special-status species reported from the region will be adversely affected by the proposed project: short-joint beavertail cactus, Vaux's swift, Cooper's hawk, Sharp-shinned hawk, Loggerhead shrike, Le Conte's thrasher and northern harrier. As such, no adverse impacts have been identified and no mitigation measures are recommended.

No western burrowing owl individuals, burrows, pellets or feathers were found during survey of the undeveloped areas of the project that support potentially suitable habitat for burrowing owl. Although no burrowing owls were located at the time of survey, they have been observed using concrete pipes as burrow sites on the Kemper Campbell Ranch property. Due to sightings of this species within the Kemper Campbell Ranch property, the California Department of Fish and Game (CDFG) may recommend a pre-construction survey of the undeveloped areas that support suitable habitat for burrowing owl.

Given the information discussed herein, Mohave ground squirrel are considered absent from the project area.

Based on the project description provided at the time of survey, there will be no construction-related impacts to jurisdictional waters. With this understanding, no regulatory permits will be required. According to the project description, the construction methods avoid stream channels as defined by the Section 1600 of the State of California Fish and Game Code under jurisdiction of the CDFG, and "Waters of the United States" as defined by Section 404 of the Clean Water Act under the jurisdiction of the U.S. Army Corps of Engineers (Corps).

2. Introduction & Methods

As the California Environmental Quality Act (CEQA) Lead Agency, the VVWRA is required to complete an environmental review to determine if the project will result in any adverse impacts to rare biological resources. The information may also be useful to federal and State regulatory agencies, including U.S. Fish and Wildlife Service (USFWS) and CDFG, respectively, if the Lead Agency asks them to assess impacts associated with proposed project. Results of the focused tortoise survey and general biological resource assessment are intended to provide sufficient baseline information to these agencies to determine if impacts will occur and to identify mitigation measures to offset those impacts.

The project is mapped within Township 5 South, Range 5 North of the U.S. Geological Survey (USGS) – Victorville Quadrangle, San Bernardino County, California (Figures 1-2). Background information was gathered prior to visiting the project site in order to determine what species would be expected in the area. This background check included a search of the California Natural Diversity Data Base (CNDDB), and a review of previously conducted biological surveys.

On April 4, 2011, a reconnaissance level biological survey was conducted by Tom Dodson and Associates (TDA) biologist, Shay Lawrey, to determine the occurrence potential for several sensitive species within or adjacent to the project. Based on the results of the reconnaissance

survey, follow-up focused surveys for SWWF, LBVI, and desert tortoise were recommended in certain areas of the project, where suitable habitat for these species exists.

A focused desert tortoise survey was conducted on April 18, 2011 in the areas where potentially suitable desert tortoise habitat exists. On August 18, 2011 a secondary, follow-up survey was also conducted to increase the potential for detection of this species. Figure 3 shows the areas surveyed for desert tortoise. Surveys were conducted along transects, spaced at 30-foot intervals throughout the selected survey areas. Zone of influence transects for detection of tortoise sign were surveyed except in areas occupied by housing. The survey was timed perfectly to detect annual plants and reptile species that would not have been observed during much of the year. No limitations significantly affected the results and conclusions given herein.

Indicators for wildlife observations included scat, tracks, burrows, nest, calls, and individual animals. All plant and animal species identified during the survey were recorded in field notes and are listed in Appendices A and B, respectively. Hand-held, global positioning system (GPS) units were used to survey straight transects and record Universal Transverse Mercador (UTM) coordinates (North American Datum - NAD 27) for project boundaries and other pertinent information. A digital camera was used to take representative photographs.

3. Results

During the survey, the general weather conditions were clear and slightly breezy. Temperatures ranged between 69º and 87ºF. The common plant and animal species identified during the survey are influenced by multiple factors such as elevation, topography, soil substrates, and adjacent land uses.

3.1. Common flora

The plant communities within the project area can be characterized as a blend of disturbed, degraded alkali desert scrub, creosote bush scrub, disturbed ruderal weeds, riparian and dry desert wash. The 75 plant species identified during the survey, are listed in Appendix A. Vegetation on the site is typical of many locations in the southwestern Mojave Desert, with elements of both desert and foothill vegetation. Perennial plants included creosote bush (*Larrea tridentada*), allscale (*Atriplex polycarpa*), cheese bush (*Hymenoclea salsola*), linear-leaf goldenbush *(Ericameria linearifolius),* California buckwheat *(Eriogonum fasciculatum),* and desert needlegrass *(Achnatherum speciosum).* Annual plants included many native wildflower species, such as sticky nama *(Pholistoma membranaceum),* Mojave sun-cups *(Camissonia campestris),* little gold-poppy *(Eschscholzia minutiflora),* purple desert lupine *(Lupinus schockleyi),* Golden linanthus *(Linanthus aureus),* sand blossoms *(Linanthus parryae),* California coreopsis *(Coreopsis californica),* common tidy tips *(Layia platyglossa),* and desert dandelion *(Malacothrix glabrata),* among others. Other annuals observed were exotic, invasive species, such as split grass *(Schismus* sp.), Saharan mustard *(Brassica tournefortii),* shortpod mustard *(Hirschfeldia incana),* tumble mustard *(Sisymbrium altissimum)*, London rocket (s. *irio)* , sisymbrium *(S. orientale),* hare barley *(Hordeum murinum),* red brome *(Bromus madritensis* ssp. *rubens),* and cheat grass *(B. tectorum),* or native plants adapted to disturbance, such as red-stemmed filaree *(Erodium cicutarium),* Lemmon's lessingia *(Lessingia lemmonii),* and fiddleneck *(Amsinckia tessellata).*

3.2. Common fauna

The three (3) reptile, 18 bird, and seven (7) mammal species identified during the general biological survey are listed in Appendix B. Side-blotched lizard *(Uta stansburiana),* western whiptail *(Cnemidophorus tigris),* and desert spiny lizard *(Sceloporus magister)* were the only reptiles observed. Other locally common reptile species that may occur include desert homed lizard *(Phrynosoma platyrhinos),* red racer *(Masticophis flagellum),* gopher snake *(Pituophis melanoleucus),* long-nosed snake *(Rhinocheilus lecontei),* and various rattlesnake species *(Crotalus* ssp.).

Common, resident bird species observed that may nest on-site or in adjacent areas included California quail *(Callipepla californica),* California towhee *(Pipilo crissalis),* California thrasher *(Toxostoma redivivum),* mourning dove *(Zenaida macroura),* homed lark *(Eremophila alpestris),* verdin *(Auriparus flavipes),* black-throated sparrow *(Amphispiza bilineata),* and sage sparrow *(Amphispiza belli).* Raptors included red-tailed hawk *(Buteo jamaicensis)* and great horned owl *(Bubo virginianus).* Species typically associated with urbanizing areas were common and included rock dove *(Columba livia),* common raven *(Corvus corax),* northern mockingbird *(Mimus polyglottos),* house finch *(Carpodacus mexicanus),* and house sparrow *(Passer domesticus).*

All detected mammals are common to the region. Small burrowing mammals included California ground squirrel *(Otospermophilus beecheyi),* Botta pocket gopher *(Thomomys bottae),* kangaroo rat *(Dipodomys sp),* and desert wood rat *(Neotoma lepida).* Medium-sized mammals included black-tailed hare *(Lepus californicus)* and Audubon cottontail *(Sylvilagus audubonii).* Coyote *(Canis latrans)* was the only predator detected.

3.3. Special Status Species

3.3.1. Desert tortoise

No tortoise sign was found within or adjacent to the focused survey areas. Based on the absence of desert tortoise sign within or adjacent to the project area, desert tortoise are considered absent from the project area survey areas. There is very little likelihood of wild tortoises entering the site from adjacent areas, either to pass through the site or establish residency. Observable human disturbances include (in descending order of prevalence) dirt roads and trails, piles of discarded vegetation waste, domestic dog signs, and off-highway vehicle tracks.

The project area is effectively isolated from suitable desert tortoise habitat by scattered surrounding residential development, the rail road and multi-lane roadways.

The site is not found within desert tortoise critical habitat, which was designated in 1994 (U.S. Fish and Wildlife Service 1994a) nor is it within a Desert Wildlife Management Area as recommended in the Desert Tortoise (Mojave Population) Recovery Plan (U.S. Fish and Wildlife Service 1994b) and formally adopted in March 2006 as a result of the West Mojave Plan (U.S. Bureau of Land Management 2005). The nearest such areas are the Ord-Rodman Critical Habitat Unit and Desert Wildlife Management Area, and the Fremont-Kramer Desert Wildlife Management Area which are located approximately 18 to 20 miles north of the project area.

3.3.2. Burrowing owl

The burrowing owl is a state Species of Special Concern. The burrowing owl is typically found in grassland, scrubland and desert habitats with numerous small mammal burrows (Coulombe 1971). Burrowing owls nest and roost in modified, expanded burrows originally created by fossorial animals including ground squirrels, desert tortoise, and badgers. They are also known to make use of human-created structures such as cement culverts and pipes for burrows.

The focused desert tortoise survey was structured, in part, to also detect burrowing owls *(Athene cunicularia),* which have been observed locally. No evidence of western burrowing owl was found in the survey area. No burrowing owl burrows, white wash, pellets or feathers were located during survey.

3.3.3. Mohave ground squirrel

Mohave ground squirrel is designated as a Threatened species by the California Fish and Game Commission. For this project, the potential for Mohave ground squirrel occurrence was assessed based on answers to the following questions: (1) Is the project area within the range of the species? (2) Is there native habitat with a relatively diverse shrub component? (3) Is the project area surrounded by development and therefore isolated from potentially occupied habitat?

Mohave ground squirrel are considered absent from the project area because (1) the project area is located outside of and to the east of current known Mohave ground squirrel locations, (2) the shrub component diversity on site is low, and (3) the project area as a whole is isolated from native habitat suitable for this species and because the project area is degraded by persisting human disturbances and uses.

3.3.4. Other Special-Status Species

The USFWS, CDFG, and California Native Plant Society maintain lists of animals and/or plants considered rare, threatened, or endangered, which are collectively referred to as "special-status species." No special status species were identified on-site during the general biological survey.

- Short-joint beavertail cactus is designated as a List IB species by the California Native Plant Society. Short-joint beavertail cactus *(Opuntia basilaris* var. *brachyclada)* is known to occur in chaparral, Joshua tree woodland, Mojave Desert scrub, and pinyon-juniper woodland communities from 900-2,000 m elevation. This cactus has been reported from a variety of soils, from sandy to rocky, in open stream beds, alluvial fans, and on rocky slopes (CNDDB 2011). Although habitat in the survey area appears suitable, the common variety of beavertail cactus *(Opuntia basilaris* var. *basilaris)* occurs on site and the special-status variety is absent from the site and adjacent properties.

Each of the bird species discussed below is considered a Bird of Conservation Concern by the USFWS and a Bird Species of Special Concern by the CDFG.

- The Sharp-shinned hawk *(Accipiter striatus)* has been observed within the upper narrows of the Mojave River. Foraging habitat suitable for the species occurs within the River Channel.

- Loggerhead shrikes *(Lanius ludovicianus)* have been observed less than a mile away to the north and south of the project site in 2005 and 2007. Loggerhead shrikes nest in both residential landscaped trees, in shrubs, and in Joshua trees and Mohave yuccas.

- Le Conte's thrashers *(Toxostoma lecontei)* are typically found in desert scrub communities, often near washes. Habitat on the subject property is suitable for foraging and nesting.

- Vaux's swift *(Chaetura vauxi)* is known as a migrant through the area, but it is not expected to breed in the local vicinity.

- The northern harrier *(Circus cyaneus)* prefers flat, open country. Foraging habitat for this species is found on the Kemper Campbell Ranch.

4. Conclusions

According to USFWS 2010 survey protocol, the results of the focused desert tortoise survey will remain valid for the period of one year, or until 18 August 2012. After which time, if the site has not been disturbed in the interim, another survey may be required to determine the persisting absence of tortoises on-site. Regardless of survey results and conclusions given herein, tortoises are protected by applicable State and federal laws, including the California Endangered Species Act and Federal Endangered Species Act, respectively. As such, if a tortoise is found on-site at the time of construction, all activities likely to affect the animal shall cease and the VVWRA and regulatory agencies shall be contacted to determine appropriate management actions.

Importantly, nothing given in this report, including recommended mitigation measures, is intended to authorize the incidental take of desert tortoises during project construction. Such authorization must come from the appropriate regulatory agencies, including CDFG (i.e., authorization under section 2081 of the Fish and Game Code) and USFWS.

5. Recommendations

I. A biologist/monitor should be present at the site during initial land disturbance activities. Otherwise, the biologist/monitor should remain on-call during construction. If tortoise or burrowing owls are encountered during construction, construction activities shall be halted in the vicinity of the find and the biologist/monitor called to the site. The contractor shall implement the recommendations of the biologist/monitor.

II. If a desert tortoise is encountered during construction, no person including the biologist will touch the animal. Instead, the biologist will observe the area to see if the desert tortoise has an established burrow or if it is just wandering through the site. If it is clearly just moving through the site, all construction activity near the tortoise will cease until it is safely out of the area. The biologist will contact the USFWS and CDFG to coordinate with them for further instruction. At that time it may be appropriate to erect exclusionary fencing to prevent the re-entry of the desert tortoise back into the site. If the biologist finds that the desert tortoise is residing in a burrow on site, then all construction must cease until the USFWS and CDFG have issued take authority to relocate the tortoise out

of the area in the vicinity of the burrow. In this case, land disturbance activities shall not commence until the biologist has implemented the required measures according to the CDFG and USFWS to clear the site for construction.

III. The biologist/monitor should remain on-call during construction activities. If a desert tortoise is encountered during construction following the initial phases of ground disturbance, construction activities shall be halted in the vicinity of the find and the biologist/monitor called to the site. The contractor shall implement the recommendations of the biologist/monitor.

IV. All personnel associated with the construction on the site should attend a worker education class. This class should include general information regarding sensitive species found in the area; relevant Federal and State laws; and worker responsibilities when working in Mohave desert habitat.

V. The State of California prohibits the “take” of active bird nests. To avoid an illegal take of active bird nests, any grubbing, brushing or tree removal will be conducted outside of the State identified nesting season (nesting season is March 15 through September 1). Alternatively, the site will be evaluated by a qualified biologist prior to initiation of ground disturbance to determine the presence or absence of nesting birds. Bird nests will be avoided during the nesting season. Otherwise, if an active nest is located in the project construction area it will be flagged and an appropriate buffer placed around it. No activity will occur within the established buffer until the young have fledged the nest.

VI. In the event that one of the sensitive plant species identified in the CNDDB is positively identified on site, during construction, the plant will be flagged and avoided until the CDFG is notified and takes their opportunity to salvage the plant.

VII. All project activities will be limited to a well-defined and visually delineated area. Prior to grading and construction activities, the limits of disturbance will be clearly marked with flagging, stakes, or fencing.

6. References

Berry, K. H., T. Shields, A. P. Woodman, T. Campbell, J. Roberson, K. Bohuski, and A. Karl.1986. Changes in desert tortoise populations at the Desert Tortoise Research Natural Area between 1979 and 1985. Proc. Desert Tortoise Council Symp. 1986:100–123.

CalFlora: Information on California plants for education, research and conservation. [web application]. Berkeley, California: The CalFlora Database [a non-profit organization]. Available: http://www.calflora.org

California Burrowing Owl Consortium, 1993. Burrowing Owl Survey Protocol and Mitigation Guidelines.

California Department of Fish and Game. 1995. Staff report on burrowing owl mitigation. Memo from C.F. Raysbrook, Interim Director to Biologist, Environmental Services Division, Department of Fish and Game. Sacramento, CA.

California Department of Fish and Game. 2008a. Special Animals (865 Taxa). Animal species list published and updated by State of California, The Resources Agency, Department of Fish and Game, Biogeographic Data Branch, California Natural Diversity Data Base. Dated February 2008. Sacramento, CA. 60 pages.

California Department of Fish and Game. 2008b. Special Vascular Plants, Bryophytes, and Lichens list. Plant species list published and updated quarterly by State of California, The Resources Agency, Department of Fish and Game, Biogeographic Data Branch, California Natural Diversity Data Base. Dated April 2008. Sacramento, CA. 70 pages.

California Department of Fish and Game. 2008c. Electronic database of rare plant and animal species reported to The State Resources Agency, Natural Heritage Division, California Natural Diversity Data Base. Sacramento, CA.

California Native Plant Society. 2001. Inventory of Rare and Endangered Plants of California (sixth edition). Rare Plant Scientific Advisory Committee, David P. Tibor, Convening Editor. California Native Plant Society. Sacramento, CA.

California Native Plant Society (CNPS). 2009. Inventory of Rare and Endangered Plants (online edition, v7-09b). California Native Plant Society. Sacramento, CA.

Desert Tortoise Compensation Team. 1991. Compensation for the desert tortoise. An unpublished report prepared for the Desert Tortoise Management Oversight Group by the Desert Tortoise Compensation Team, and approved by the Desert Tortoise Management Oversight Group on 13 November 1991.

Hickman, J. C. (ed.). 1993. The Jepson Manual. Higher Plants of California. University of California Press, Berkeley and Los Angeles, California. 1400 pp.

Holland, Robert F., Ph.D. 1986. *Preliminary Descriptions of the Terrestrial Natural Communities of California*. California Department of Fish and Game Nongame Heritage Program (now Natural Heritage Division), Sacramento. October.

Holland, V.L. and Keil, David J. 1990. *California Vegetation*, 4th ed. El Corral Publications, San Luis Obispo, California.

Jennings, W. B. 1993. Foraging ecology and habitat utilization of the desert tortoise (*Gopherus agassizii*) at the Desert Tortoise Research Natural Area, eastern Kern County, California. Report for the U. S. Bureau of Land Management, Contract No. B950-C2-0014, Riverside, California. 101 pp.

Mohave Ground Squirrel, eNature.com, August 5, 2004. http://enature.com/fieldguide/showSpeciesIMG.asp?imageID=18805

Phil Leitner. *Mohave Ground Squirrel,* © 1999. August 5, 2004. http://www.tortoise-tracks.org/denizens/mgs.html

U.S. Bureau of Land Management. 1980. The California Desert Conservation Area Plan. U.S. Bureau of Land Management, Riverside, California. 173 pp.

U.S. Bureau of Land Management and California Department of Fish and Game. 1988. A Sikes Act Management Plan for the Desert Tortoise Research Natural Area and Area of Critical Environmental Concern. U.S. Bureau of Land Management, Ridgecrest, California. 43 pp. + unpaginated appendices.

U.S. Bureau of Land Management. 1989. Map produced by BLM for the California Desert Conservation Area, dated January 1989, showing desert tortoise Category I, 2, and 3 Habitats in California. Riverside, CA.

U.S. Bureau of Land Management. 2005. Final Environmental Impact Report and Statement for the West Mojave Plan, a Habitat Conservation Plan and California Desert Conservation Area Plan Amendment. Moreno Valley, CA.

U.S. Fish and Wildlife Service. 1994. The desert tortoise (Mojave population) recovery plan. U.S. Fish and Wildlife Service, Region 1, Lead Region, Portland, Oregon. 73 pp. + appendices.

U.S. Fish and Wildlife Service. 1992. Field survey protocol for any nonfederal action that may occur within the range of the desert tortoise. Ventura, CA.

U.S. Fish and Wildlife Service. I994a. Endangered and threatened wildlife and plants; determination of critical habitat for the Mojave population of the desert tortoise. Federal Register 55(26):5820-5866. Washington, D.C.

FIGURES

Figure 1. Location Map

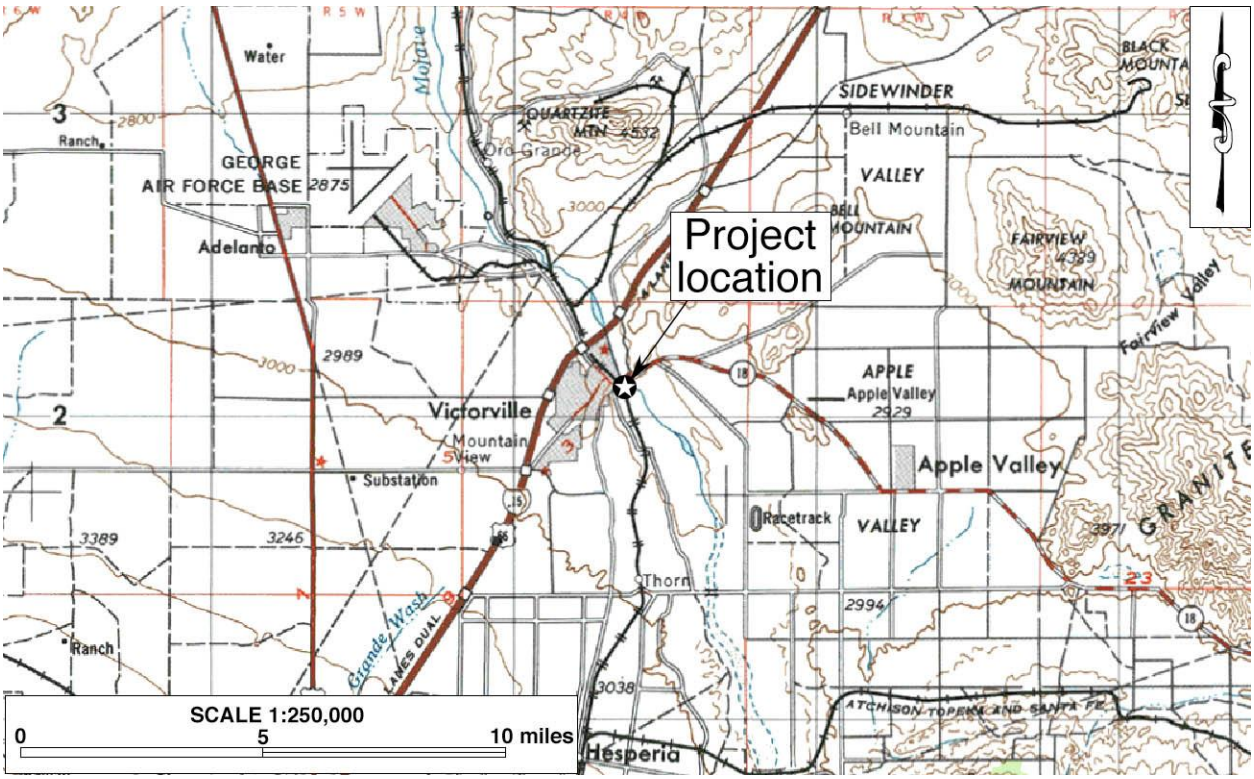

Figure 2. Project Site Map

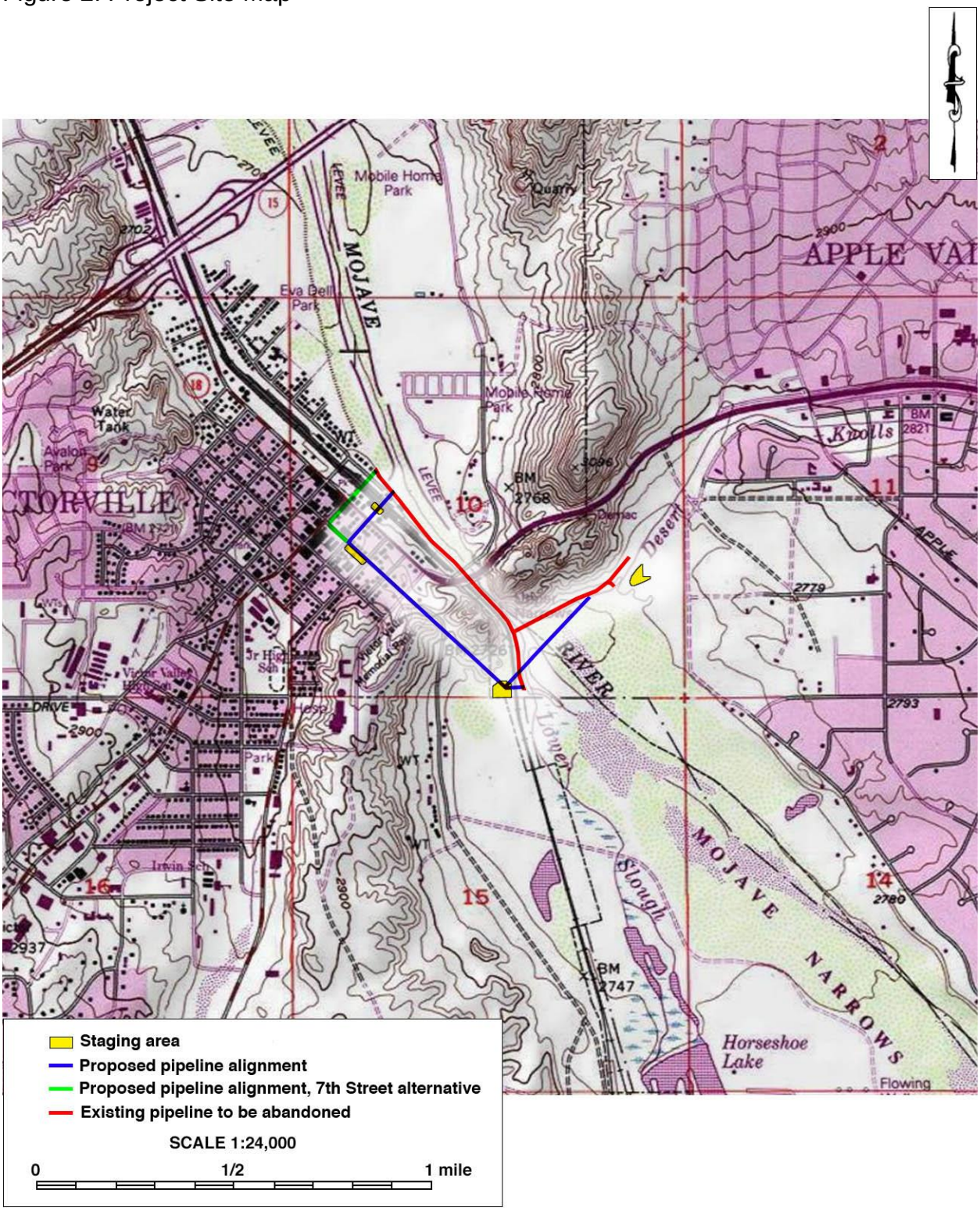

Figure 3. Focused Desert Tortoise Survey Areas

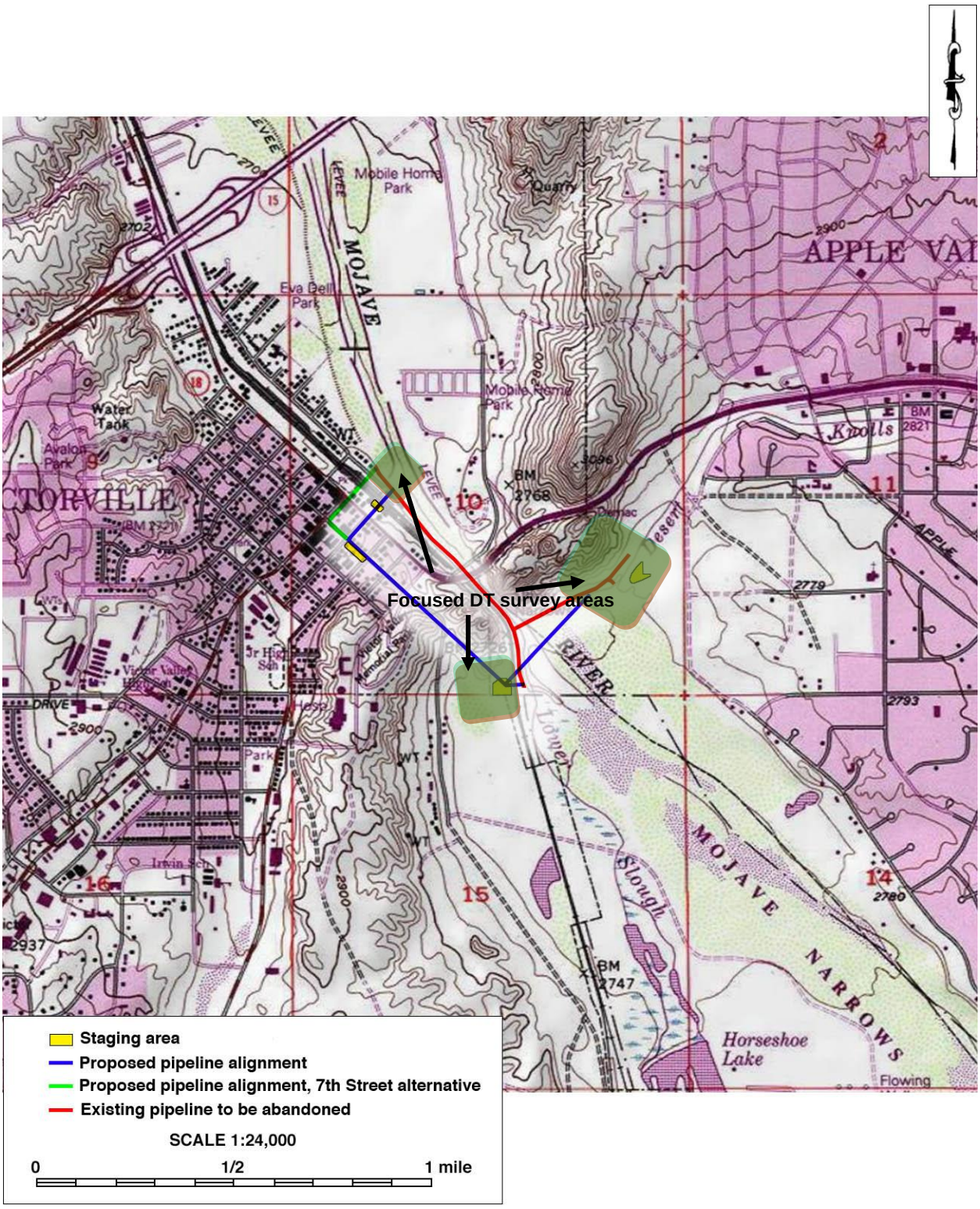

SITE PHOTOS

Photo 1. Typical view of habitat conditions within focused desert tortoise survey area.

Photo 2. Another typical view of habitat conditions within focused desert tortoise survey area.

Photo 3. View of desert scrub habitat adjacent to the Upper Narrows of the Mojave River

APPENDICIES

Appendix A. Floral Compendium

The following plant species were identified on-site or in adjacent areas (i.e., signified by "+") during the general biological inventory described in this report. Special-status plant species are signified by "(SC)" following the common names.

CONIFERAE	CONE-BEARING PLANTS
Cupressaceae	**Cypress family**
Juniperus californica	California juniper
Ephedraceae	**Joint-fir family**
Ephedra californica	Desert tea
Ephedra nevadensis	Nevada joint-fir
ANGIOSPERMAE: DICOTYLEDONES	DICOT FLOWERING PLANTS
Apiaceae	**Carrot family**
Lomatium mohavense	Lomatium
Asteraceae	**Sunflower family**
Ambrosia acanthicarpa	Annual bur-sage
Artemisia tridentata	Great Basin sagebrush
Atrichoseris platyphylla	Gravel-ghost
Chrysothamnus nauseosus	Rubber rabbitbrush
Coreopsis californica	California coreopsis
Ericameria cooperi val. *cooperi*	Cooper's goldenbush
Ericameria linearifolia	Interior goldenbush
Eriophyllum pringlei	Pringle's woolly daisy
+Gutierrezia sarothrae	Matchweed
+Hymenoclea salsola	Cheesebush
Layia platyglossa	Common tidy tips
Lessingia lemmonii	Lemmon's lessingia
Malacothrix glabrata	Desert dandelion
Senecio flaccidus (douglasii)	Groundsel
Stephanomeria exigua	Milk aster
Tetradymia stenolepis	Mohave horsebrush
Boraginaceae	**Borage family**
Amsinckia tessellata	Fiddleneck
Cryptantha angustifolia	Narrow-leaved forget-me-not
Cryptantha micrantha	Forget-me-not
Cryptantha pterocarya	Wing-nut forget-me-not
Pectocarya linearis	Comb-bur
Pectocarya penicillata	Slender combseed
Pectocarya recurvata	Curved combseed
Plagiobohrys arizonicus	Arizona popcorn flower
Brassicaceae	**Mustard family**
**Brassica tournefortii*	Saharan mustard
Guillenia lasiophylla (l'helypodium lasiophyllum)	California mustard Short-pod mustard

**Hirschftldia incana (Brassica geniculata)*	Tumble mustard
**Sisymbrium altissimum*	London rocket
**Sisymbrium irio*	Sisymbrium
**Sisymbrium orientale*	
Cactaceae	**Cactus family**
Opuntia basilaris	Beavertail cactus
Opuntia echinocarpa	Silver cholla
Chenopodiaceae	**Goosefoot family**
Grayia spinosa	Spiny hop-sage
+Krascheninnikovia (Eurotia) lanata	Winter fat
**Salsola tragus*	Russian. thistle
Cuscutaceae	**Dodder family**
Cuscuta sp.	Dodder
Euphorbiaceae	**Spurge family**
Chamaesyce (Euphorbia) albomarginata	Rattlesnake weed
Fabaceae	**Pea family**
Lotus scoparius	Deerweed
Lupinus shockleyii	Purple desert lupine
Geraneaceae	**Geranium family**
**Erodium cicutarium*	Red-stemmed filaree
Hydrophyllaceae	**Water-leaf family**
Phacelia crenulata	Purple phacelia
Pholistoma membranaceum	Sticky nama
Lamiaceae	**Mint family**
**Marrubium vulgare*	Horehound
Salazaria mexicana	Paper-bag bush
+Salvia carduacea	Thistle sage
+Salvia columbariae	Chia
Salvia dorrii	Blue sage
Loasaceae	**Stick-leaf family**
Mentzelia albicaulis	Little blazing star
Nyctaginaceae	**Four o'clock family**
Mirabilis bigelovii	Desert wishbone plant
Onagraceae	**Evening-primrose family**
Camissonia campestris	Mojave sun-cups
Papaveraceae	**Poppy family**
Eschscholzia minutiflora	Little gold-poppy
Polemoniaceae	**Phlox family**

Eriasirum densifolium	Woolly star
Linanthus aureus	Golden linanthus
Linanthus parryae	Sand blossoms
Polygonaceae	**Buckwheat family**
Eriogonum dejlexum	Desert skeleton weed
Eriogonum fasciculatum	California buckwheat
Eriogonum pusillum	Buckwheat
Ranunculaceae	**Crowfoot larkspur**
Delphinium parishii	Larkspur
Salicaceae	**Willow family**
Populus fremontii	Fremont's cottonwood
Solanaceae	**Nightshade family**
.Lycium andersonii	Anderson's box-thorn
Lycium cooperi	Peach thorn
Zygophyllaceae	**Caltrop family**
+Larrea tridentata	Creosote bush
ANGIOSPERMAE: MONOCOTYLEDONES	MONOCOT FLOWERING PLANTS
Amaryllidaceae	**Amaryllis family**
+Dichelostemma pulchellum	Blue dicks
Liliaceae	**Lily family**
Yucca brevifolia	Joshua tree
Poaceae	**Grass family**
Achnatherum speciosum (Stipa speciosa)	Desert needlegrass
*+*Bromus diandrus*	Common ripgut-grass
**Bromus madritensis* ssp. *rubens*	Red brome
**Bromus tectorum*	Cheat grass
**Hordeum murinum*	Hare barley
Poasecunda	Fowl bluegrass
**Schismus* sp.	Split-grass

* •indicates a non-native (introduced) species.
c.f. - compares favorably to a given species when the actual species is unknown.

Appendix B. Fauna Observed

The following animal species were detected on-site or in adjacent areas (i.e., signified by "+") during the general biological inventory described in this report.

REPTILIA	REPTILES
Iguanidae	**Iguanids**
Sceloporus magister	Desert spiny lizard
Uta stansburiana	Side-blotched lizard
Teiidae	**Whiptails**
Cnemidophorus tigris	Western whiptail
AVES	BIRDS
Accipitridae	**Hawks, eagles, harriers**
Buteo jamaicensis	Red-tailed hawk
Phasianidae	**Grouse and quail**
Callipepla cali/ornica	California quail
Columbidae	**Pigeons and doves**
Zenaida macroura	Mourning dove
Strigidae	**Typical owls**
Bubo virginianus	Great homed owl
Trochilidae	**Hummingbirds**
Calypte anna	Anna's hummingbird
Picidae	**Woodpeckers**
+Picoides scalaris	Ladder-backed woodpecker
Tyrannidae	**Tyrant flycatchers**
Myiarchus cinerascens	Ash-throated flycatcher
Corvidae	**Crows and jays**
Corvus corax	Common raven
Remizidae	**Verdins**
Auriparus jlavipes	Verdin
Troglodytidae	**Wrens**
Campylorhynchus brunneicapillus	Cactus wren
Mimidae	**Mockingbirds and thrashers**
Mimus polyglottos	Northern mockingbird
Toxostoma redivivum	California thrasher
Pipilo crissalis	California towhee
Spizella passerina	Chipping sparrow
Amphispiza bilineata	Black-throated sparrow

Amphispiza belli	Sage sparrow .
Fringillidae	**Finches**
Carpodacus mexicanus	House finch
Passeridae	**Weavers**
+Passer domesticus	House sparrow
MAMMALIA	MAMMALS
Leporidae	**Hares and rabbits**
Lepus californicus	Black-tailed hare
Sylvilagus audubonii	Audubon cottontail
Sciuridae	**Squirrels**
Otospermophilus beecheyi	California ground squirrel
Geomyidae	**Pocket gophers**
+Thomomys bottae	Botta pocket gopher
Heteromyidae	Pocket mice
Dipodomys sp.	Kangaroo rat
Cricetidae	**Rats and mice**
+Neotoma lepida	Desert wood rat
Canidae	**Foxes, wolves and coyotes**
Canis latrans	Coyote

Nomenclature follows Stebbins, *A Field Guide to Western Reptiles and Amphibians* (2003), third edition; Sibley, National Audubon Society, the Sibley Guide to Birds (2000), first edition; and Ingles, Mammals of the Pacific States (1965), second edition.

APPENDIX 2

Focused SWWF & LBVI Survey Report

Focused least Bell's vireo *Vireo bellii pusillus* (LBVI) & southwestern willow flycatcher *Empidonax trallii extimus* (SWWF) Survey Report for the Upper Narrows Interceptor Replacement Project

Section10 of Township 5S and Range 5N of the U.S. Geological Survey
Victorville Quadrangle, San Bernardino County, California

Prepared for:

Victor Valley Wastewater Reclamation Authority
15776 Main Street, Suite 3
Hesperia CA 92345
Contact Person: Logan Olds, General Manager
Phone Number: (760) 948-9849x110

Prepared by:

Tom Dodson & Associates
2150 North Arrowhead Avenue
San Bernardino, California 92405
Contact Person: Shay Lawrey
Phone Number: (909) 882-3612

Certification: I hereby certify that the statements furnished herein, and in the attached exhibits present data and information required for this Biological Survey to the best of my ability, and the facts, statements, and information presented are true and correct to the best of my knowledge and belief. This report was prepared in accordance with professional requirements and recommended protocols for avian surveys (USFWS permit No. TE-094308-0)

Shay Lawrey
Surveys Conducted between April 15 & July 31, 2011
Report Date: August 10, 2011

Table of Contents

1 EXECUTIVE SUMMARY **1**

2 SPECIES BACKGROUND INFORMATION **2**

2.1 SWWF 2

2.2 LBVI 3

3 ENVIRONMENTAL SETTING **4**

4 METHODS **4**

5 RESULTS AND CONCLUSIONS **5**

6 LITERATURE CITED **7**

TABLES

Table1. Survey dates, survey time and weather conditions…… 6

FIGURES *(located at the end of the document)*

Figure 1. Vicinity Location Map

Figure 2. Project Site Location

Figure 3. SWWF and LBVI Survey Area and Detections

SITE PHOTOS *(located at the end of the document)*

APPENDICES

Appendix 1. Floral Compendium

Appendix 2. Observed Avian Species

Appendix 3. California Native Species Survey Form & Willow Flycatcher Survey and Detection Form

1 Executive Summary

The Victor Valley Wastewater Reclamation Authority (VVWRA) has applied for Federal financial assistance (Federal action) from FEMA through the California Governor's Office of Emergency Services (OES), to permanently replace damaged wastewater conveyance facilities. Specifically, a main sewer interceptor line located under the Mojave River was damaged during recent winter storms. This natural disaster contributed to the presidential disaster declaration FEMA-1952-DR-CA: "Severe Winter Storms, Flooding, and Debris and Mud Flows" which occurred from December 17, 2010, to January 4, 2011. FEMA is proposing to fund the project under disaster relief that was implemented in response to the presidential disaster declaration.

A significant storm event occurred in the Victor Valley subregion and San Bernardino County, beginning the week of December 19, 2010. As a result of the devastating rains, the VVWRA sustained damage to the sewer interceptor under the Mojave River, in a section of the river with extremely limited access known as the Upper Narrows. The pipe breach was discovered on December 29, 2010. VVWRA immediately began work to create an emergency sewer force main to bypass the breach in the damaged sewer interceptor, and divert the wastewater through newly built temporary lines and booster pumping stations. Additionally, the force of the river flow resulting from the storm event was so great that the exposed manholes (MH) along the damaged sewer interceptor within the Mojave River (estimated to be between MH 5-1 to MH 5-8, and MH 1 to MH 4) became tilted, causing further damage to the pipeline and manholes. Sand, sediment and debris entered the pipeline at the ruptured areas.

As a result of the heavy river flows due to the storm, the existing Mojave River gravity sewer interceptor was damaged beyond repair and must be replaced between Manhole (MH) 5-1 to MH 5-8 and MH 1 to MH 4. Reconnaissance of the damage was performed via pipeline cleaning and sonar; this confirmed which portions of pipeline were damaged beyond repair and must be replaced in order to restore the function of the existing gravity sewer line interceptor.

The project area lies within a section of the Mojave River known as the Upper Narrows in the Victor Valley subregion, located in southwestern San Bernardino County, California. The project area can be found on the U.S. Geological Survey (USGS) 7.5 Minute Series topographic map of the Victorville Quadrangle within Township 5 South, Range 5 North of Section 10 (Refer to Figures 1-3 located at the end of the document).

Two (2) federally and State listed as endangered species known to occur within the vicinity of the project area along the Mojave River are the southwestern willow flycatcher (SWWF) [*Empidonax traillii extimus*] and least Bell's vireo (LBVI) [*Vireo bellii pusillus*] The project area falls within the historic range of these species and is within the vicinity of recorded sightings of these species. Reach I-A of the project area is located within the Mojave River which is a sizeable drainage course that supports habitat suitable for SWWF and LBVI. Designated critical habitat exists on site for the SWWF.

The U.S. Fish and Wildlife Service (USFWS) determined the endangered status for LBVI in 1986 and SWWF in 1995 pursuant to the provisions of the Endangered Species Act of 1973, as amended (Act). Prior to the federal listings, the State of California had determined the endangered status for LBVI and SWWF in 1980 and 1992, respectively.

These birds were once readily found in the riparian habitats of southern California, but their range has diminished significantly in recent decades. The primary causes of their population declines are habitat loss and habitat degradation. The listings of LBVI and SWWF under the Act triggered the protective measures of Section 9(a) of the Act, which prohibits the Take of listed species. Take is defined in the Act in Section 3(18) as to harass, harm, pursue, hunt, shoot, wound, kill, trap, capture or collect. Additionally, the Act requires Federal agencies to insure that activities they authorize, fund, or carry out are not likely to jeopardize the continued existence of any listed species, or destroy or adversely modify its critical habitat, if any is designated.

The focused LBVI and SWWF surveys for the project area were warranted due to the presence of suitable habitat and designated critical habitat for SWWF. On behalf of the VVWRA, Tom Dodson & Associates (TDA) conducted focused LBVI and SWWF surveys within Reach I-A along the upper narrows of the Mojave River, within Section 10 of Township 5 South, Range 5 North of the U.S. Geological Survey (USGS) – Victorville Quadrangle, San Bernardino County, California. TDA Biologist, Shay Lawrey conducted the focused surveys in accordance with the provisions of her federal permit (USFWS permit No. TE-094308-0) within an approximate half-mile stretch of a drainage characterized as a southern cottonwood willow riparian forest. The habitat consists of an intricate three to four story canopy structure. Flowing and pooled water was present throughout the survey area.

LBVI were present onsite throughout the survey period. One (1) breeding LBVI pair was confirmed within the focused survey area. A SWWF, confirmed by sight and song, was detected in the survey area during one of the five SWWF surveys. This SWWF was considered to be a migrant because it was detected early in the survey season and no other SWWF were detected during any of the subsequent surveys. Active Cooper's hawk *(Accipter cooperii)* and red-shouldered hawk (*Buteo lineatus*) nests were observed. Other special status avian species detected during the surveys include yellow warbler *(Dendroica petechia),* and yellow-breasted chat (*Icteria virens)* . These species are listed as species of special concern by the California Department of Fish and Game (CDFG). Large numbers of brown-headed cowbirds were seen during every survey.

2 Species Background Information

2.1 SWWF

The SWWF is a small passerine bird that has a grayish-green back and wings, whitish throat, a light gray-olive breast, and pale yellowish belly. It has two visible white wing bars and a faint or absent eye ring. The call consists of a repeated "whit" and their song is a sneezy "fitz-bew." (60 FR 10694) The southwestern willow flycatcher is currently one of the four recognized subspecies of the willow flycatcher. This flycatcher is a neotropical migrant that breeds in the southwestern United States from mid-April to early-September. In the fall, it migrates south to its wintering grounds in portions of South America, Central America and Mexico. (60 FR 10694)

A rapid decrease in the numbers of southwestern willow flycatchers in California and other southwestern states prompted the USFWS to designate it as a Category 1 candidate species in 1991. One year later in 1992, the California Fish and Game

Commission listed the species as endangered, under the California Endangered Species Act (CESA) of 1970. On July 23, 1993 the southwestern willow flycatcher was proposed for listing as endangered by the USFWS and was then listed as Federally endangered on February 27, 1995, under the Endangered Species Act (ESA) of 1973 (60 FR 10694). The USFWS designated critical habitat for the species on July 22, 1997. This habitat includes 18 units with a total of 599 miles of river in California, New Mexico, and Arizona. In California, critical habitat was designated along portions of the Santa Ana River, San Luis Rey River, San Diego River, Santa Margarita River, Tijuana River, and south fork of the Kern River (62 FR 39129). On May 11, 2001, the critical habitat designation from 1997 was struck down by the U.S. 10th Circuit Court of Appeals who required further economic analysis. A recovery plan was finalized by USFWS in March of 2003. Critical habitat designations for this species were re-proposed and finalized in June 2004 (USFWS 2003c).

The SWWF breeds in dense riparian habitats along rivers, streams, and other wetlands. They have been documented to establish territories in elevations ranging from sea level to 8,500 feet (Sogge 1997). Plant species closely associated with the flycatcher include willows (Salix spp.), boxelder (Acer negungo), seepwillow (Baccharis spp.), with an overstory of cottonwood (Populus fremontii) (62 FR 39129). Occupied habitat is generally dominated by shrubs and trees 13 to 23 feet or more in height, which provide dense lower and mid-story vegetation approximately 13 feet aboveground. This dense vegetation is often interspersed with open water, small openings, or sparse vegetation, creating a mosaic that is not uniformly dense (62 FR 39129).

2.2 LBVI

The LBVI is a small, olive-gray migratory songbird that nests and forages almost exclusively in riparian woodland habitats. Bell's vireos as a group are highly territorial and are almost exclusively insectivorous. LBVI nesting habitat typically consists of well developed overstory, understory, and low densities of aquatic and herbaceous cover. The understory frequently contains dense sub-shrub or shrub thickets. These thickets are often dominated by plants such as narrow-leaf willow, mulefat, young individuals of other willow species such as arroyo willow or black willow, and one or more herbaceous species. LBVI generally begin to arrive from their wintering range in southern Baja California and establish breeding territories by mid-March to late-March. A large majority of breeding vireos apparently depart their breeding grounds by the third week of September and only a very few have been found wintering in the United States.

The explanations for the drastic decline of this species are various; however the two prevailing factors are habitat loss and brown-headed cowbird brood parasitism (Kus 1998; Sogge et al. 1997). This small passerine species constructs open cup nests low in the riparian canopy, which may cause them be more vulnerable to brood parasitism compared to larger passerines that nest higher in the canopy. The loss of and degradation of riparian habitats have both occurred due to urban and agricultural development, fire, water diversion and impoundment, channelization, livestock grazing, off-road vehicle use and recreation, replacement of native habitats by introduced plant species, and hydrological changes resulting from these and other land uses. LBVI was first proposed for listing as endangered by the USFWS on May 3, 1985, (50 FR 18968) and was subsequently listed as federally endangered on May 2, 1986 (60 FR 10694). Critical habitat units were designated by the USFWS on February 2, 1994 (59 FR 4845)

and included reaches of ten streams in six counties in southern California and the surrounding approximately 38,000 acres. The critical habitat units exist in the Santa Ynez River, Santa Clara River, Santa Ana River, Santa Margarita River, San Luis Rey River, Sweetwater River, San Diego River, Tijuana River, Coyote Creek, and Jumul-Dulzura Creek.

Although LBVI use a variety of riparian plant species for nesting, it appears that the structure of the vegetation is more important than other factors such as species composition or the age of the stand. LBVI begin to arrive at their breeding grounds in southern California riparian areas from mid-March to early April. Upon arrival, males establish breeding territories that range in size from 0.5 to 7.4 acres, with an average size of approximately 2 acres. After pair formation, vireos construct a hanging cup nest made up of dried plant material. Nests are usually placed in forks of branches between 2 and 5 feet from the ground. Females lay two to five eggs with both parents incubating the clutch for approximately 14 days and the young fledging after 10 to 12 days. The fledglings will remain in the parental territory for up to a month. LBVI leave the breeding grounds and migrate south mid to late September.

3 Environmental Setting

The Project area lies within a section of the Mojave River known as the Upper Narrows in the Victor Valley subregion, on the southern rim of the Mojave Desert, to the north of the San Bernardino-San Gabriel mountain ranges. The survey area occurred in the upper narrows of the Mojave River which is surrounded by steep and rugged rock outcrop topography. The local area climate is semi-arid, with an average annual temperature of 62°F and a range from 35-97°F. The rainy season begins in November and continues through March, with the quantity and frequency of rain varying from year to year. The average annual rainfall is approximately 3.4 inches. The general vicinity of the subject property consists of vacant land, open space, pasture range land, recreational parks, education facilities, major arterial roads and a mixed suburban and rural residential community. Habitat within the LBVI and SWWF survey area can be characterized as a southern cottonwood willow riparian forest.

4 Methods

Prior to performing the surveys, available databases and documentation relevant to the project site was reviewed for known occurrences of LBVI and SWWF in the area. The most recent version of the California Natural Diversity Database (CNDDB) was searched for sensitive species data on the Victorville USGS quad. This database contains records of reported occurrences of state and federally listed species or otherwise sensitive species and habitats that may occur within the vicinity of the subject property. The literature review included a review of standard field guides and texts on sensitive and non sensitive biological resources, as well as the following sources:

1. U.S. Fish and Wildlife Service 1994. Final Determination of Critical Habitat for the Least Bell's Vireo (*Vireo bellii pusillus*); Final Rule. 59 FR 4845

2. U.S. Fish and Wildlife Service 1999. Least Bell's Vireo Survey Guidelines. Issued by the Carlsbad Fish and Wildlife Office. April 8, 3 pp.

3. U.S. Fish and Wildlife Service 1998. Draft recovery plan for the least Bell's vireo. U.S. Fish and Wildlife Office. April 8 3 pp

4. U.S. Fish and Wildlife Service 2005. Final Determination of Critical Habitat for the Southwestern Willow Flycatcher (Empidonax traillii extimus); Final Rule. 70 FR 60885 61009.

Other available technical information on the biological resources of the site was also reviewed including previous LBVI and SWWF surveys and recent findings which were discussed with researchers in the field.

On April 02, 2011 TDA biologist, Shay Lawrey walked the project area to visually assess the site conditions within the area slated for the LBVI and SWWF surveys. Ms. Lawrey has a decade of LBVI and SWWF survey experience. Ms. Lawrey considered the habitat suitable for both target species because it contained a mosaic of cottonwood (*Populus fermontii*), willow (*Salix* spp), and other riparian vegetative associations that was densely structured in a three to four story canopy. Based on the botanical components, percent vegetative cover, and habitat structure, Ms. Lawrey determined that LBVI and SWWF had a moderate potential of occurring in the area identified for the focused survey.

Ms. Lawrey conducted the LBVI and SWWF surveys pursuant to her USFWS Permit (TE-094308-0) and according to the recommended guidelines provided in the "… survey protocol for the Southwestern Willow Flycatcher: U.S. Geological Survey Techniques and Methods 2A-10, 38 p." (2010) and the "Survey Protocol for the Least Bell's Vireo (1999), as modified through an agreement with the USFWS. Eight LBVI surveys were conducted between April 15 and July 31, 2011 and five SWWF were conducted between May 19 and July 17, 2011. Survey dates, durations, and weather conditions are summarized in the Results section below in Table 1.

5 Results and Conclusions

The hydrological conditions in the project area promote the establishment of riparian vegetation. Winter flows create areas of scour and sedimentation that cycle the community back to earlier successional stages. Periodic floods of large magnitude, and migration of the river channel, lay down fresh alluvial deposits where seeds can germinate and propagules can take root. The dynamic hydrologic regime contributes to the habitat's structural diversity and high wildlife value. More species of birds nest in riparian forest than in any other California plant community. In addition to this, 25% of California's land mammals depend on the riparian habitat.

The habitat within the LBVI and SWWF survey area is in various seral stages and generally consists of tall, multilayered, open canopy riparian forest. The dominant vegetative species within this riparian forest include: Freemont cottonwood (*Populus fremontii)* and several tree willows (*Salix* spp). Characteristic species, in addition to the cottonwood, include black willow (*S. goodingii*) narrow-leved willow (*S. exigua*), arroyo willow (*S. lasiolepis*), red willow (*S. laevigata*), mulefat (*Baccharis salicifolia*), Sycamore (*Platanus recemosa)* and elderberry *(Sambucus mexicana).* The dense riparian stands consist of an intricate three to four story canopy structure, with trees standing approximately 40, 25, and 12 feet tall with over 85 percent vegetative cover. The under

story consists of cattail and other native herbaceous riparian plants. Flowing and pooled water was present throughout the survey area. In addition to willow riparian habitat, the survey area also supports wetland habitat.

No limitations or constraints could be identified that could influence the survey results. Surveys were conducted during the appropriate season, in good weather conditions, by a qualified biologist who followed all pertinent protocols. Weather conditions were clear and cool with calm winds (Table 1).

Table1. Survey dates, survey time and weather conditions

Survey Dates	Target Species	Taget Species Detected	Time Begin/End	%Cloud Cover	Wind (BFT)	Temp °F Begin /End
04/26	LBVI	LBVI	0600 to 1000	20	2	53/68
05/11	LBVI	LBVI	0600 to 1030	10	1	52/68
05/19	LBVI & SWWF	SWWF	0500 to 0830	15	1	56/62
05/29	LBVI	LBVI	0530 to 0830	10	2	60/70
06/11	LBVI & SWWF	LBVI	0510 to 0900	0	0	61/67
06/23	LBVI & SWWF	LBVI	0530 to 1000	10	2	58/77
07/09	LBVI & SWWF	LBVI	0530 to 0930	15	3	59/79
07/17	LBVI & SWWF	LBVI	0600 to 1100	5	2	70/84

LBVI were present onsite throughout the survey period. One (1) breeding LBVI pair was confirmed within the focused survey area. A SWWF, confirmed by sight and song, was detected in the survey area during the first of the SWWF surveys. No SWWF were detected during the subsequent surveys. Therefore the SWWF seen during the first survey was considered to be a migrant and not a territorial breeding SWWF. Table 1 above provides a summary of these results.

6 Literature Cited

California Department of Fish and Game (CDFG), 2011. RareFind 3 Version 3.1.0, California Natural Diversity Data Base, California. Accessed on April 01, 2011.

California Native Plant Society (CNPS), 2011. Inventory of Rare and Endangered Plants of California. Rare Plant Scientific Advisory Committee, David P. Tibor, Convening Editor. California Native Plant Society. Sacramento, California. Available at: http://www.cnps.org/inventory. Accessed on April 01, 2011.

Hickman, J. C., ed. 1993. The Jepson Manual: Higher Plants of California. Univ. of Calif. Pr., Berkeley, CA.

Holland, R. F. 1986. Preliminary descriptions of the Terrestrial Natural Communities of California. Calif. Dept. of Fish and Game, Sacramento, CA.

U.S. Fish and Wildlife Service 1994. Final Determination of Critical Habitat for the Least Bell's Vireo (*Vireo bellii pusillus*); Final Rule. 59 FR 4845

U.S. Fish and Wildlife Service 1999. Least Bell's Vireo Survey Guidelines. Issued by the Carlsbad Fish and Wildlife Office. April 8, 3 pp.

U.S. Fish and Wildlife Service 1998. Draft recovery plan for the least Bell's vireo. U.S. Fish and Wildlife Office. April 8 3 pp

U.S. Fish and Wildlife Service 2005. Final Determination of Critical Habitat for the Southwestern Willow Flycatcher (Empidonax traillii extimus); Final Rule. 70 FR 60885 61009.

Sogge, M.K., Ahlers, Darrell, and Sferra, S.J., 2010, A natural history summary and survey protocol for the Southwestern Willow Flycatcher: U.S. Geological Survey Techniques and Methods 2A-10, 38p.

Figures

Figure 1. Location Map

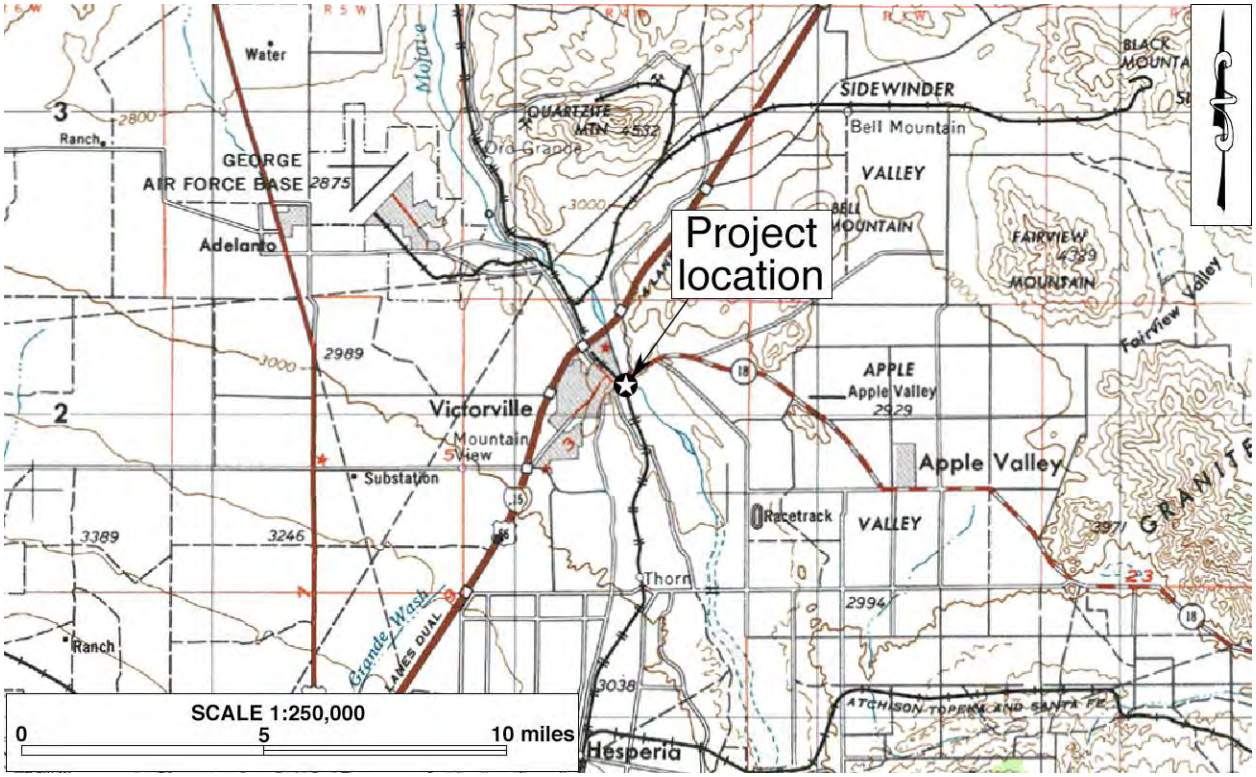

Figure 2. Project Site Map

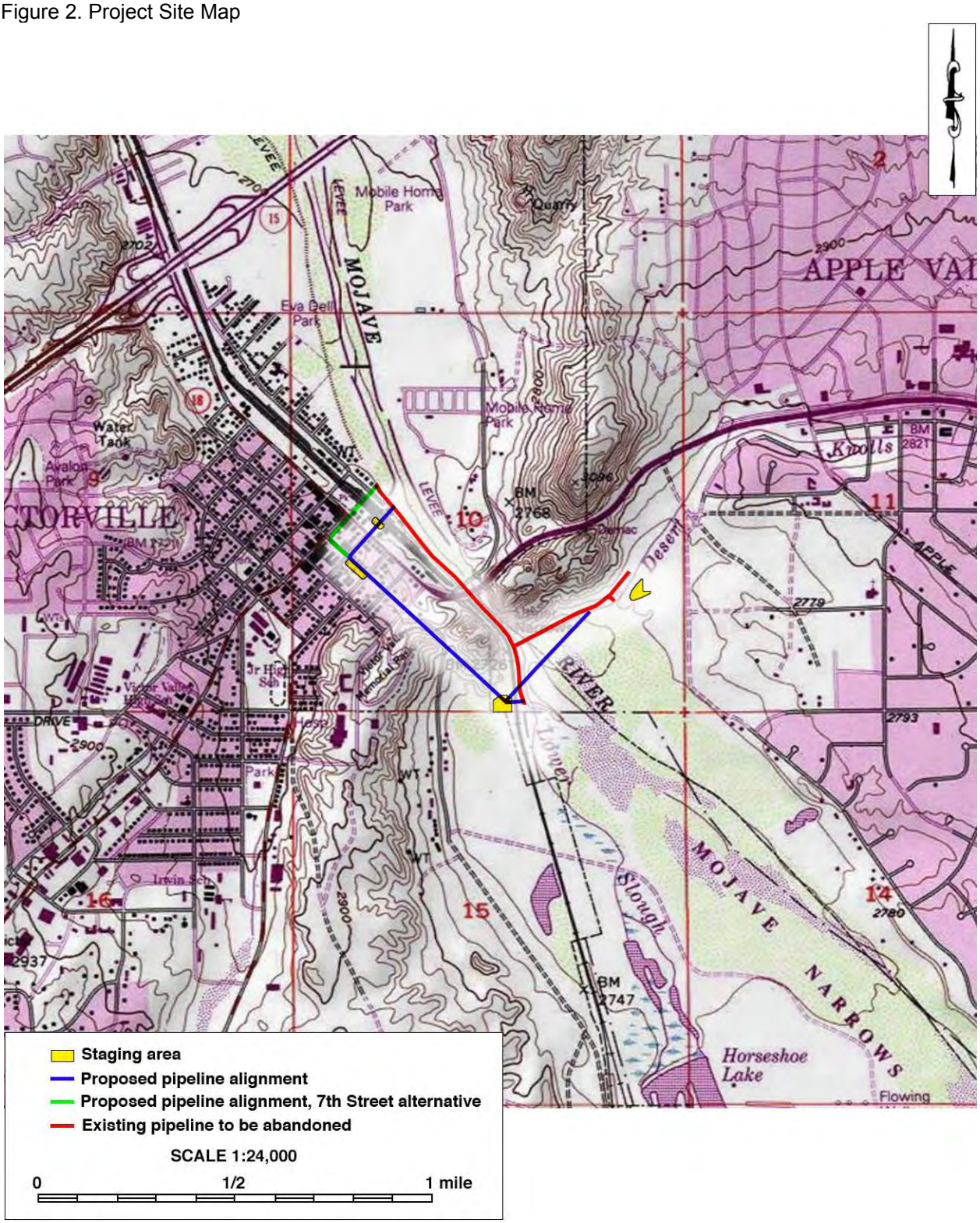

Figure 3. SWWF & LBVI Focused Survey Area and Detections

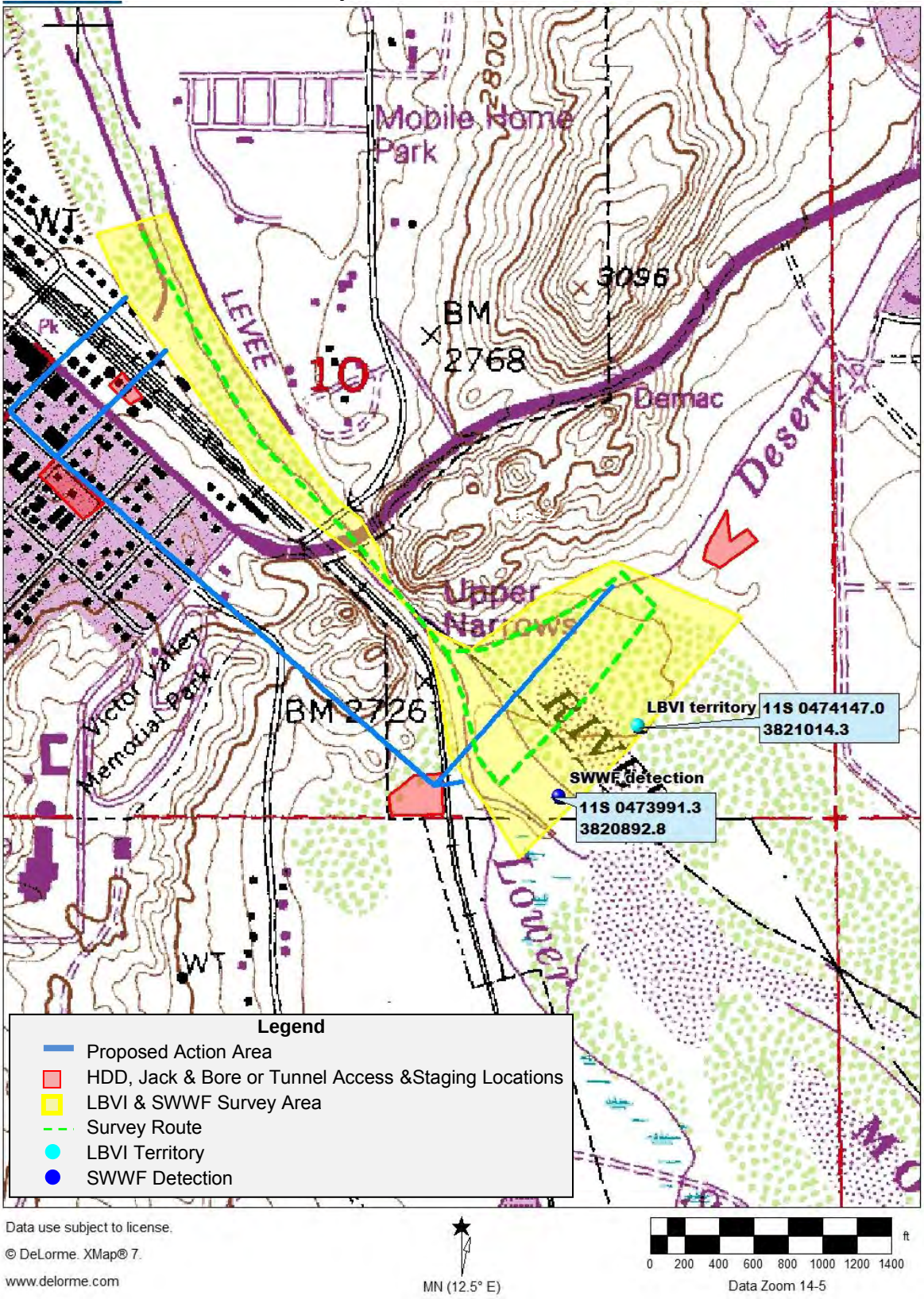

Figure 4. SWWF critical habitat overlay

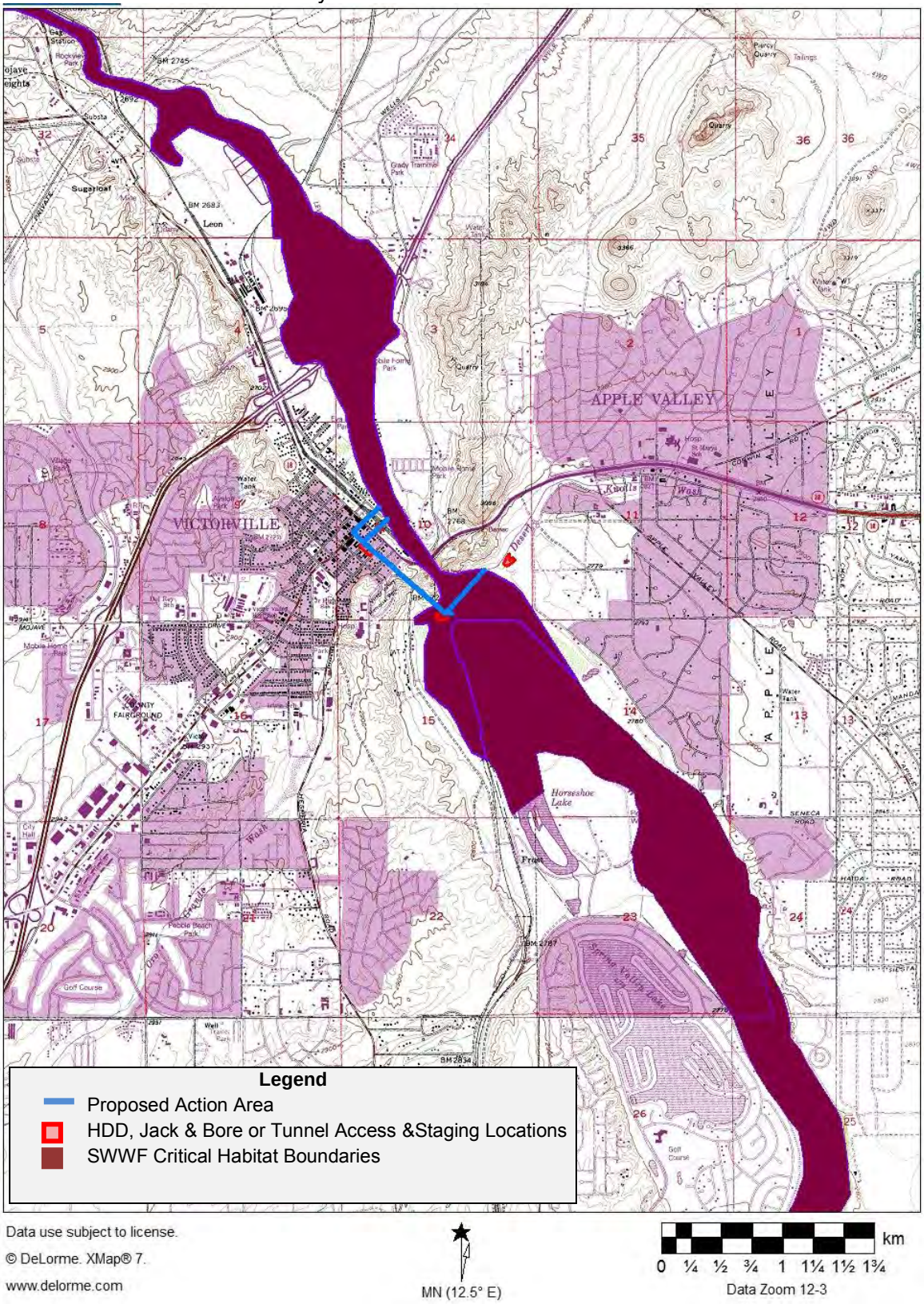

Data use subject to license.

© DeLorme. XMap® 7.

www.delorme.com

MN (12.5° E)

0 ¼ ½ ¾ 1 1¼ 1½ 1¾ km

Data Zoom 12-3

Site Photographs

Photo 1. Standing at confluence of Desert Knolls Wash confluence with the Mojave River looking southwest into the survey area, east of the project action area.

Photo 2. Typical view showing habitat density and structure within the SWWF and LBVI survey area.

Photo 3. Typical view habitat conditions within the identified LBVI territory located .

Photo 4. Typical view of the habitat structure where the SWWF was detected

Photo 1. Standing at eastern boundary of the SWWF and LBVI survey area looking west northwest at the Upper Narrows formations.

Appendix 1
Floral Compendium

Scientific Name	Common Name
Agave americana	American century plant
Agrostis viridis	Water bentgrass
Amsinckia menziesii	common fiddleneck
Anagallis arvensis	scarlet pimpernel
Antirrhinum coulterianum	white snapdragon
Apiastrum angustifolium	mock parsley
Araujia sericifera	white bladderflower
Artemisia californica	coastal sagebrush
Artemisia douglansiana	Douglas' sagewort
Artemisia dracunculus	tarragon
Arundo donax	giant reed
Atriplex suberecta	peregrine saltbush
Avena barbata	slender wild oat
Avena fatua	common wild oat
Baccharis salicifolia	mule-fat
Bebbia juncea	sweetbush
Bloomeria crocea	common gold stars
Brickellia californica	California brickellbush
Bromus carinatus	California brome
Bromus catharticus	rescue grass
Bromus diandrus	Ripgut grass
Bromus hordeaceus	Soft chess
Bromus madritensis ssp. *Rubens*	Foxtail chess
Bromus tectorum	Cheatgrass
Calandrinia ciliata	fringed redmaids
Calendula arvensis	field marigold
Calyptridium monandrum	Common pussypaws
Camissonia bistora	Southern suncup
Camissonia californica	california csuncup
Camissonia ignota	Petioled primrose
Camissonia micrantha	Small primrose
Carex	sedge
Chamaesyce albomarginata	whitemargin sandmat
Chenopodium calfiornicum	California goosefoot
Chenopodium murale	nettleleaf goosefoot

Clarkia bottae	Punchbowl clarkia
Clarkia dudleyana	Dudley's clarkia
Claytonia perfoliata var. *perfoliata*	Miner's lettuce
Conyza canadensis	Canadian horseweed
Corethrogyne filaginifolia	common sandaster
Crassula connata	sand pygmyweed
Croton californicus	California croton
Croton sagiterus	Doveweed
Crypsis schoenoides	Swamp Timothy
Cryptantha intermedia	clearwater cryptantha
Cyperus eragrostis	Tall umbrella sedge
Datura stramonium	jimsonweed
Daucus pusillus	American wild carrot
Delphinium cardinale	Scarlet larkspur
Dendromecon rigida	Tree poppy
Eriogonum fasciculatum	California buckwheat
Erodium cicutarium	red-stemmed filaree
Erodium moschatum	white-stemmed filaree
Eschscholzia californica	California poppy
Eucalyptus camaldulensis	River redgum
Galium angustifolium ssp. *Angustifolium*	narrow-leaved bedstraw
Galium aparine	common bedstraw
Galium nuttallii ssp. *Nuttallii*	San Diego bedstraw
Gazania linearis	treasureflower
Gilia angelensis	Grasslang gilia
Gilia capitata	Globe gilia
Gnaphalium	cudweed
Gnaphalium californicum	California everlasting
Gnaphalium canescens ssp. *Microcephalum*	White everlasting
Gnaphalium stramineum	Cotton-batting plant
Hesperocnide tenella	western stingingnettle
Hirschfeldia incana	shortpod mustard
Hordeum murinum ssp. *Leporinum*	hare barley
Juncus arcticus var. *mexicanus*	Mexican rush
Lupinus succulentus	Arroyo lupine
Lupinus trunctus	Collar lupine

Malacothamnus fascicilatus	Mendocino bushmallow
Malva nicaeensis	Bull mallow
Malva parviflora	Cheeseweed
Marrubuim vulgare	horehound
Medicago polymorpha	California burclover
Melica imperfecta	Small-flowered melic
Mirabilis californica	California wishbone bush
Muhlenbergia microsperma	littleseep muhly
Muilla maritima	Rough muilla
Nassella cernua	nodding needlegrass
Nassella pulchra	Purple needlegrass
Nicotiana glauca	Tree tocabbo
Phacelia distans	common phacelia
Phacelia minor	Wild Canterbury bells
Phacelia ramosissima	Branching phacelia
Picris echioides	bristly ox-tongue
Plantago erecta	dotseed plantain
Plantago ovata	desert Indianwheat
Platanus racemosa	California sycamore
Poa secunda ssp. *Secunda*	Malpais bluegrass
Populus fremontii ssp. *Fremontii*	Fremont cottonwood
Ricinis communis	Castor bean
Rorippa nasturtium-aquaticum	White water-cress
Rubus ursinus	California blackberry
Rumex crispus	curly dock
Rumex hymenosepalus	wild rhubarb
Rumex salicifolius	willow dock
Salix exigua	narrow-leaved willow
Salix gooddingii	Gooding's black willow
Salix laevigata	red willow
Salix lasiolepis	Arroyo willow
Sambucus mexicana	Mexican elderberry
Schismus barbatus	Mediterranean grass
Scirpus microcarpus	Small-fruited bulrush
Scrophularia californica	California figwort
Selaginella bigelovii	Bigelow's spike-moss

Senecio californicus	California ragwort
Sisymbrium altissimum	tall tumblemustard
Stephanomerica virgata ssp. *Virgata*	rod wirelettuce
Tamarix ramosissima	Mediterranean tamarisk
Trifolium incarnatum	crimson clover
Typha doningensis	Southern cat-tail
Typha latifolia	Broad-leaved cat-tail
Urtica dioica ssp. *Holosericea*	Hoary nettle
Urtica urens	dwarf nettle
Vinca major	bigleaf periwinkle
Vitis girdiana	desert wild grape
Vulpia microstachys	Nuttall's fescue
Vulpia myuros	Rattail fescue

Appendix 2
Avian Species Observed

Genus	Species	Subspecies	Common
Ardea	*herodias*		Great Blue Heron
Ardea	*alba*		Great Egret
Bubulcus	*ibis*		Cattle Egret
Butorides	*virescens*		Green Heron
Nycticorax	*nycticorax*		Black-crowned Night-Heron
Cathartes	*aura*		Turkey Vulture
Branta	*canadensis*		Canada Goose
Anas	*platyrhynchos*		Mallard
Bucephala	*clangula*		Common Goldeneye
Circus	*cyaneus*		Northern Harrier
Accipiter	*cooperi*		Cooper's Hawk
Buteo	*lineatus*		Red-shouldered Hawk
Buteo	*swainsoni*		Swainson's Hawk
Buteo	*jamaicensis*		Red-tailed Hawk
Buteo	*regalis*		Ferruginous Hawk
Falco	*sparverius*		American Kestrel
Callipepla	*californica*		California Quail
Fulica	*americana*		American Coot
Charadrius	*valisineria*		Killdeer
Zenaida	*asiatica*		White-winged Dove
Zenaida	*macroura*		Mourning Dove
Columbina	*passerina*		Common Ground-Dove
Geococcyx	*californianus*		Greater Roadrunner
Tyto	*alba*		Common Barn Owl
Bubo	*virginianus*		Great Horned Owl
Chordeiles	*minor*		Common Nighthawk
Calypte	*anna*		Anna's Hummingbird
Selasphorus	*sasin*		Allen's Hummingbird
Ceryle	*alcyon*		Belted Kingfisher
Picoides	*nuttallii*		Nuttall's Woodpecker
Colaptes	*auratus*		Northern Flicker
Contopus	*sordidulus*		Western Wood-Pewee
Empidonax	*traillii*	*extimus*	Southwestern willow flycatcher
Sayornis	*nigricans*		Black Phoebe
Sayornis	*saya*		Say's Phoebe
Myiarchus	*cinerascens*		Ash-throated Flycatcher

Genus	Species	Subspecies	Common
Tyrannus	*verticalis*		Western Kingbird
Lanius	*excubitor*		Northern Shrike
Vireo	*bellii*	*pusillus*	Least Bell's Vireo
Vireo	*gilvus*		Warbling Vireo
Vireo	*philadelphicus*		Philadelphia Vireo
Corvus	*brachyrhynchos*		American Crow
Corvus	*corax*		Common Raven
Tachycineta	*thalassina*		Violet-green Swallow
Stelgidopteryx	*serripennis*		Northern Rough-winged Swallow
Petrochelidon	*pyrrhonota*		Cliff Swallow
Auriparus	*flaviceps*		Verdin
Psaltriparus	*minimus*		Bushtit
Sitta	*canadensis*		Red-breasted Nuthatch
Certhia	*americana*		Brown Creeper
Thryomanes	*bewickii*		Bewick's Wren
Troglodytes	*aedon*		House Wren
Cistothorus	*palustris*		Marsh Wren
Cinclus	*mexicanus*		American Dipper
Regulus	*calendula*		Ruby-crowned Kinglet
Polioptila	*melanura*		Black-tailed Gnatcatcher
Sialia	*mexicana*		Western Bluebird
Catharus	*ustulatus*		Swainson's Thrush
Turdus	*migratorius*		American Robin
Chamaea	*fasciata*		Wrentit
Mimulus	*polyglottos*		Northern Mockingbird
Toxostoma	*redivivum*		California Thrasher
Phainopepla	*nitens*		Phainopepla
Vermivora	*celata*		Orange-crowned Warbler
Dendroica	*petechia*		Yellow Warbler
Dendroica	*coronata*		Yellow-rumped Warbler
Dendroica	*nigrescens*		Black-throated Gray Warbler
Dendroica	*townsendi*		Townsend's Warbler
Dendroica	*occidentalis*		Hermit Warbler
Oporornis	*philadelphia*		Mourning Warbler
Oporornis	*tolmiei*		MacGillivray's Warbler

Genus	Species	Subspecies	Common
Geothlypis	*trichas*		Common Yellowthroat
Wilsonia	*citrina*		Hooded Warbler
Wilsonia	*pusilla*		Wilson's Warbler
Icteria	*virens*		Yellow-breasted Chat
Piranga	*rubra*		Summer Tanager
Pipilo	*maculatus*		Spotted Towhee
Pipilo	*crissalis*		California Towhee
Spizella	*passerina*		Chipping Sparrow
Spizella	*breweri*		Brewer's Sparrow
Pooecetes	*gramineus*		Vesper Sparrow
Ammodramus	*savannarum*		Grasshopper Sparrow
Melospiza	*melodia*		Song Sparrow
Melospiza	*lincolnii*		Lincoln's Sparrow
Pheucticus	*melanocephalus*		Black-headed Grosbeak
Guiraca	*caerulea*		Blue Grosbeak
Passerina	*amoena*		Lazuli Bunting
Agelaius	*phoeniceus*		Red-winged Blackbird
Euphagus	*cyanocephalus*		Brewer's Blackbird
Quiscalus	*mexicanus*		Great-tailed Grackle
Molothrus	*ater*		Brown-headed Cowbird
Icterus	*cucullatus*		Hooded Oriole
Icterus	*bullockii*		Bullocks Oriole
Fringilla	*montifringilla*		Brambling
Carpodacus	*mexicanus*		House Finch
Carduelis	*psaltria*		Lesser Goldfinch
Carduelis	*lawrencei*		Lawrence's Goldfinch
Carduelis	*tristis*		American Goldfinch
Coccothraustes	*vespertinus*		Evening Grosbeak
Passer	*domesticus*		House Sparrow

Appendix 3
California Native Species Survey Form & Willow Flycatcher Survey and Detection Form

Mail to:
California Natural Diversity Database
Department of Fish and Game
1807 13th Street, Suite 202
Sacramento, CA 95811
Fax: (916) 324-0475 email: CNDDB@dfg.ca.gov

Date of Field Work (mm/dd/yyyy): 07/17/2011

For Office Use Only

Source Code _____ Quad Code _____
Elm Code _____ Occ. No. _____
EO Index No. _____ Map Index No. _____

Reset

California Native Species Field Survey Form

Send Form

Scientific Name: *Vireo bellii pusillus*

Common Name: least Bell's vireo

Species Found? ☑ Yes ☐ No _____ If not, why?

Total No. Individuals 4 Subsequent Visit? ☑ yes ☐ no

Is this an existing NDDB occurrence? _____ Yes, Occ. # ☐ no ☑ unk.

Collection? If yes: _____ Number _____ Museum / Herbarium

Reporter: Shay Lawrey
Address: 2150 N. Arrowhead Avenue
San Bernardino, CA 92405
E-mail Address: shay@tdaenv.com
Phone: (909) 882-3612

Plant Information

Phenology: ____% vegetative ____% flowering ____% fruiting

Animal Information

# adults	# juveniles	# larvae	# egg masses	# unknown
2	2			

☐ wintering ☑ breeding ☑ nesting ☐ rookery ☐ burrow site ☐ other

Location Description ***(please attach map AND/OR fill out your choice of coordinates, below)***

County: San Bernardino Landowner / Mgr.: San Bernardino County Flood Control District
Quad Name: Victorville Elevation: _____
T 5S R 5N Sec 10, ____ ¼ of ____ ¼, Meridian: H☐ M☐ S☑ Source of Coordinates (GPS, topo. map & type): GPS
T____ R____ Sec ____, ____ ¼ of ____ ¼, Meridian: H☐ M☐ S☐ GPS Make & Model Earthmate PN-40
DATUM: NAD27 ☐ NAD83 ☐ WGS84 ☑ Horizontal Accuracy 3m meters/feet
Coordinate System: UTM Zone 10 ☐ UTM Zone 11 ☑ *OR* Geographic (Latitude & Longitude) ☐
Coordinates: 04740001/3280897

Habitat Description (plants & animals) *plant communities, dominants, associates, substrates/soils, aspects/slope:*
Animal Behavior *(Describe observed behavior, such as territoriality, foraging, singing, calling, copulating, perching, roosting, etc., especially for avifauna):*
Cotton willow riaprian forest. Intricate three story canopy structure with over 80 pecent cover in most areas. Pooled water found in survey area. Maximum heigh 40 feet, minium height 15 feet. Herbaceous understory. Populus fremontii, Salix gooddingii and S. exigua are the dominant plant species. LBVI see throughout the protocol survey of eight surveys. 2 fledglings detected.

Please fill out separate form for other rare taxa seen at this site.

Site Information Overall site/occurrence quality/viability (site + population): ☑ Excellent ☐ Good ☐ Fair ☐ Poor

Immediate AND surrounding land use: RR, Educational institution (Lewis Center), agriculture, residential and rural residential,.

Visible disturbances: Recent flooding and light human intrusion.

Threats: Fire and OHV.

Comments: LBVI have been found in the vicinity before. Habitat is highly suitable for LBVI.

Determination: *(check one or more, and fill in blanks)*

☐ Keyed (cite reference): _____
☐ Compared with specimen housed at: _____
☐ Compared with photo / drawing in: _____
☐ By another person (name): _____
☑ Other: By direct observation of individuals and hearing vocalization of song.

Photographs: *(check one or more)*

	Slide	Print	Digital
Plant / animal	☐	☐	☐
Habitat	☐	☐	☑
Diagnostic feature	☐	☐	☐

May we obtain duplicates at our expense? yes ☑ no ☐

Appendix 1. Willow Flycatcher Survey and Detection Form

Always check the U.S. Fish and Wildlife Service Arizona Ecological Services Field Office web site (http://www.fws.gov/southwest/es/arizona/) for the most up-to-date version.

Willow Flycatcher (WIFL) Survey and Detection Form (revised April 2010)

Site Name VVWRA FEMA Upper Narrows State CA County San Bernardino
USGS Quad Name Victorville Elevation 828 (meters)
Creek, River, Wetland, or Lake Name Mojave River
Is copy of USGS map marked with survey area and WIFL sightings attached (as required)? ***Yes*** X ***No*** ___

Survey Coordinates: Start: E 0473263 N 3821908 UTM Datum 27 (See instructions)
Stop: E 0474124 N 3820968 UTM Zone 11 S

If survey coordinates changed between visits, enter coordinates for each survey in comments section on back of this page.

***** Fill in additional site information on back of this page *****

Survey # / Observer(s) (Full Name)	Date (m/d/y) Survey time	Number of Adult WIFLs	Estimated Number of Pairs	Estimated Number of Territories	Nest(s) Found? Y or N If Yes, number of nests	Comments (e.g., bird behavior; evidence of pairs or breeding; potential threats [livestock, cowbirds, *Diorhabda* spp.]). If *Diorhabda* found, contact USFWS and State WIFL coordinator	GPS Coordinates for WIFL Detections (this is an optional column for documenting individuals, pairs, or groups of birds found on each survey). Include additional sheets if necessary. 11S			
Survey # 1 Observer(s) Shay Lawrey	Date 5/19 Start 500 Stop 830 Total hrs 3.5	.1	Too early to tell yet.	Too early to tell	No	This single adult SWWF gave one Fitz bew vocalization + sat perched ontop of a cottonwood.	# Birds 1	Sex M	UTM E 0474000	UTM N 3280849
Survey # 2 Observer(s) Shay Lawrey	Date 6/11 Start 510 Stop 900 Total hrs 4	Ø	Ø	Ø			# Birds	Sex	UTM E	UTM N
Survey # 3 Observer(s) Shay Lawrey	Date 6/23 Start 530 Stop 1000 Total hrs 4.5	Ø	Ø	Ø			# Birds	Sex	UTM E	UTM N
Survey # 4 Observer(s) S. Lawrey	Date 7/9 Start 530 Stop 930 Total hrs 4	Ø	Ø	Ø			# Birds	Sex	UTM E	UTM N
Survey # 5 Observer(s) S. Lawrey	Date 7/17 Start 600 Stop 1100 Total hrs 5	Ø	Ø	Ø			# Birds	Sex	UTM E	UTM N

Overall Site Summary Totals do not equal the sum of each column. Include only resident adults. Do not include migrants, nestlings, and fledglings. Be careful not to double count individuals. Total Survey Hrs ___	Total Adult Residents	Total Pairs	Total Territories	Total Nests	Were any Willow Flycatchers color-banded? Yes___ No X If yes, report color combination(s) in the comments section on back of form and report to USFWS.
	Ø	Ø	Ø	Ø	

Reporting Individual Shay Lawrey Date Report Completed Aug. 31, 2011
US Fish and Wildlife Service Permit # TE-094308-0 State Wildlife Agency Permit # 007256

***Submit** form to USFWS and State Wildlife Agency by September 1st. Retain a copy for your records.*

Fill in the following information completely. Submit form by September 1st. Retain a copy for your records.

Reporting Individual Shay Laurel Phone # (909) 882-3612
Affiliation Tom Dodson & Associates E-mail Shaye@tdaenv.com
Site Name Upper Narrows Date Report Completed Aug 31, 2011
Was this site surveyed in a previous year? Yes___ No ___ Unknown ✓
Did you verify that this site name is consistent with that used in previous years? Yes ____ No _____ Not Applicable ✓
If site name is different, what name(s) was used in the past?_____
If site was surveyed last year, did you survey the same general area this year? Yes ____ No ____ If no, summarize below.
Did you survey the same general area during each visit to this site this year? Yes ✓ No ____ If no, summarize below.

Management Authority for Survey Area: Federal___ Municipal/County ✓ State___ Tribal ___ Private ✓
Name of Management Entity or Owner (e.g., Tonto National Forest) Lewis Center / San Bernardino County Flood Control Dist.

Length of area surveyed: 1.27 (km)

Vegetation Characteristics: Check (only one) category that best describes the predominant tree/shrub foliar layer at this site:

✓ Native broadleaf plants (entirely or almost entirely, > 90% native)

_____ Mixed native and exotic plants (mostly native, 50 - 90% native)

_____ Mixed native and exotic plants (mostly exotic, 50 - 90% exotic)

_____ Exotic/introduced plants (entirely or almost entirely, > 90% exotic)

Identify the 2-3 predominant tree/shrub species in order of dominance. Use scientific names.
Populus Fremontii, Salix goodingii, S. exigua

Average height of canopy (Do not include a range): 35 Ft. (meters)

Attach the following: 1) copy of USGS quad/topographical map (REQUIRED) of survey area, outlining survey site and location of WIFL detections; 2) sketch or aerial photo showing site location, patch shape, survey route, location of any detected WIFLs or their nests; 3) photos of the interior of the patch, exterior of the patch, and overall site. Describe any unique habitat features in Comments.

Comments (such as start and end coordinates of survey area if changed among surveys, supplemental visits to sites, unique habitat features. Attach additional sheets if necessary.

Territory Summary Table. Provide the following information for each verified territory at your site.

Territory Number	All Dates Detected	UTM E	UTM N	Pair Confirmed? Y or N	Nest Found? Y or N	Description of How You Confirmed Territory and Breeding Status (e.g., vocalization type, pair interactions, nesting attempts, behavior)
None						

Attach additional sheets if necessary

APPENDIX 4

Environment
Air & Water Quality
Auditing
Fire & Building Code
Permitting
Phase I/II Assessment
Project Management
Remedial Design
Risk Assessment
Waste Management

Health & Safety
Food Safety
Industrial Hygiene
Job Safety Analysis
Mold
Training

Web-based Solutions
Quality ISO 9001
Environment ISO 14001
EHS Management
Battery Management
Waste Tracking

Daren E. Jorgensen
President

Vice Presidents
Bruce A. Armbruster
Peter G. Stein

Managers
Caitlin O'Connor
Kimberly P. Holden
Shaun N. Nieves
Brianne Wilkerson
Amy Bakchis

P: +1.909.483.3300
F: +1.909.646.9854
http://www.jecsi.net

VIA Email: tda@tdaenv.com

Mr. Tom Dodson
Tom Dodson & Associates
2150 North Arrowhead Avenue
San Bernardino, CA 92405

30 September 2011

Re: Air Quality Analysis for the Victor Valley Wastewater Upper Narrows Pipeline Replacement Project in Victorville, California.

Dear Tom:

JE Compliance Services, Inc. (JECSI) was retained by Tom Dodson & Associates (TDA) to prepare a limited air quality analysis to focus on emission calculations for the Upper Narrows Pipeline Replacement Project in Victorville, California. The project involves the following: horizontal directional drilling, jack and bore, tunneling, deep open trenching, and removal of existing equipment. The maximum daily emissions associated with each phase of the project were calculated independently so emissions may be combined where phases overlap.

Analysis Methodology for Construction Scenario

The following activities were evaluated: horizontal directional drilling, jack and bore, tunneling, deep open trenching, and removal of existing equipment.

Horizontal Directional Drilling Phase

The horizontal directional drilling phase of the project will consist of 2,286 feet of pipeline installed by horizontal directional drilling. Emissions from horizontal directional drilling activities occur from fugitive dust due to site grading activities, fugitive dust due to pipeline installation excavation, equipment exhaust, worker trips, and steel manufacturing.

Maximum daily emissions of PM10 from site grading activities were estimated using an emission factor of 10 pounds per acre-day and a disturbed area of 0.25 acres per day. Maximum daily emissions of PM2.5 from site grading activities were estimated using an emission factor of 2.1 pounds per acre-day and a disturbed area of 0.25 acres per day. Maximum daily emissions of PM10 from excavation activities were estimated using an emission factor of 10 pounds per acre-day and a disturbed area of 104 square feet per day. Maximum daily emissions of PM2.5 from excavation activities were estimated using an emission factor of 2.1 pounds per acre-day and a disturbed area of 104 square feet per day.

Approximately 400 cubic yards of bentonite, 510 cubic yards of soil and 87,000 gallons of water are expected to be exported from the site during horizontal directional drilling. The quantity of bentonite, soil, and water exported from the site was provided by Tetra Tech.

Maximum daily emissions from fugitive dust were generated using emission factors from URBEMIS 2007. Maximum daily emissions from off-road equipment were calculated using California Air Resources Board (CARB) off-road model emission factors. Maximum daily emissions from on-road equipment such as delivery trucks, hauling trucks, and worker vehicles were estimated using EMFAC 2007 emission factors for on-road vehicles. Indirect emissions of carbon dioxide from the manufacturing of steel were estimated using International Iron and Steel Institute emission factors[1].

The schedule of area to be graded, off-road equipment, on-road equipment, and steel usage is based on information provided by Tetra Tech. The quantity of pipeline excavated and installed per day is estimated based on the total length of pipeline installed during horizontal directional drilling. Criteria pollutant and greenhouse gas emissions from horizontal directional drilling activities are summarized in **Attachment 1**.

Jack and Bore Phase

The jack and bore phase includes excavation of entrance pits, exit pits, and jack and bore installation of pipeline. Jack and bore activities will occur at Reach I-B and Reach I-V. Approximately 222 feet of pipeline will be installed at Reach 1-B and 208 feet of pipeline will be installed at Reach I-V. Activities may occur concurrently depending on available equipment. Emissions from jack and bore activities occur from fugitive dust due to excavation activities, equipment exhaust, worker trips, and steel manufacturing.

Maximum daily emissions of PM10 from excavation activities were estimated using an emission factor of 10 pounds per acre-day. Maximum daily emissions of PM2.5 from excavation activities were estimated using an emission factor of 2.1 pounds per acre-day. PM emissions were calculated based on a disturbed area of 400 square feet per day during entrance pit excavation, 100 square feet per day during exit pit excavation, and 67 square feet per day during jack and bore operations. No soil is expected to be exported or imported during entrance and exit pit excavation operations. Approximately 226 cubic yards of soil are expected to be exported during jack and bore operations. The quantity of soil exported from the site and the distance the soil was transported during jack and bore operations was provided by Tetra Tech.

Maximum daily emissions from fugitive dust were generated using emission factors from URBEMIS 2007. Maximum daily emissions from off-road equipment were calculated using California Air Resources Board (CARB) off-road model emission factors. Maximum daily emissions from on-road equipment such as delivery trucks, hauling trucks, and worker vehicles were estimated using EMFAC 2007 emission factors for on-road vehicles. Indirect emissions of carbon dioxide from the manufacturing of steel were estimated using International Iron and Steel Institute emission factors. Although the pipeline is to be constructed of plastic material, the manufacturing of steel was used as a proxy since published emission factors for plastic pipe manufacturing were not available.

The schedule of off-road equipment, on-road equipment, and area to be excavated is based on information provided by Tetra Tech. The quantity of pipeline installed is based on information provided

[1] "Sustainability Report for the World Steel Industry 2005", International Iron and Steel Institute, May 2006.

by TDA. Criteria pollutant and greenhouse gas emissions from jack and bore activities are summarized in **Attachment 1**.

Tunneling Phase

The tunneling phase includes excavation of entrance pits, exit pits, creation of a 1,387 foot tunnel using a tunneling boring machine, and installation of pipe. Emissions from tunneling activities occur from fugitive dust due to excavation activities, equipment exhaust, worker trips, and steel manufacturing.

Maximum daily emissions of PM10 from excavation activities were estimated using an emission factor of 10 pounds per acre-day. Maximum daily emissions of PM2.5 from excavation activities were estimated using an emission factor of 2.1 pounds per acre-day. PM emissions were calculated based on a disturbed area of 400 square feet per day during entrance pit excavation, 100 square feet per day during exit pit excavation, and 67 feet per day during tunneling operations. No soil is expected to be exported or imported during entrance and exit pit excavation operations. Approximately 5,990 cubic yards of soil are expected to be exported during tunneling operations. The quantity of soil exported from the site during tunneling operations was estimated based on information provided by Tetra Tech.

Maximum daily emissions from fugitive dust were generated using emission factors from URBEMIS 2007. Maximum daily emissions from off-road equipment were calculated using California Air Resources Board (CARB) off-road model emission factors. Maximum daily emissions from on-road equipment such as delivery trucks, hauling trucks, and worker vehicles were estimated using EMFAC 2007 emission factors for on-road vehicles. Indirect emissions of carbon dioxide from the manufacturing of steel were estimated using International Iron and Steel Institute emission factors. Although the pipeline is to be constructed of plastic material, the manufacturing of steel was used as a proxy since published emission factors for plastic pipe manufacturing were not available.

The schedule of off-road equipment, on-road equipment, area to be excavated, and steel quantities is based on information provided by Tetra Tech. Criteria pollutant and greenhouse gas emissions from tunneling activities are summarized in **Attachment 1**.

Deep Opening Trenching Phase

The deep open trenching phase includes excavation and installation of approximately 2,347 feet of pipeline. Deep open trenching activities will occur at Reach III and Reach V. Emissions from deep open trenching activities occur from fugitive dust due to excavation activities, equipment exhaust, worker trips, pavement off-gas, and steel manufacturing.

Maximum daily emissions of PM10 from excavation activities were estimated using an emission factor of 10 pounds per acre-day. Maximum daily emissions of PM2.5 from excavation activities were estimated using an emission factor of 2.1 pounds per acre-day. PM emissions were calculated using an estimated disturbed area based on the dimensions of pipeline to be installed. The quantity of soil exported from the site during deep open trenching operations was estimated based on the dimensions of the pipeline to be installed.

Maximum daily emissions from fugitive dust were generated using emission factors from URBEMIS 2007. Maximum daily emissions from off-road equipment were calculated using California Air Resources Board (CARB) off-road model emission factors. Maximum daily emissions from on-road equipment such as delivery trucks, hauling trucks, and worker vehicles were estimated using EMFAC 2007 emission factors for on-road vehicles. Indirect emissions of carbon dioxide from the manufacturing of steel were estimated using International Iron and Steel Institute emission factors. Although the pipeline is to be constructed of plastic material, the manufacturing of steel was used as a proxy since published emission factors for plastic pipe manufacturing were not available.

The schedule of off-road equipment, on-road equipment, area to be excavated, and steel quantities is based on information provided by Tetra Tech. Criteria pollutant and greenhouse gas emissions from deep open trenching activities are summarized in **Attachment 1**.

Equipment Removal Phase

The equipment removal phase will consist of removal of the existing temporary sewer by-pass main, a bridge in the Mojave River, and two booster pumping stations will be taken off-line. Emissions from equipment removal activities occur from fugitive dust due to equipment exhaust and worker trips.

Maximum daily emissions from off-road equipment were calculated using California Air Resources Board (CARB) off-road model emission factors. Maximum daily emissions from on-road equipment such as delivery trucks, hauling trucks, and worker vehicles were estimated using EMFAC 2007 emission factors for on-road vehicles.

The schedule of off-road equipment and on-road equipment is based on information provided by Tetra Tech. Criteria pollutant and greenhouse gas emissions from equipment removal activities are summarized in **Attachment 1**.

Emissions Evaluation

Mojave Desert Air Quality Management District (MDAQMD) publishes screening levels to determine if a project is regionally significant. Unmitigated construction emissions from the project are provided in **Table 1** through **Table 7**. Unmitigated emissions of criteria pollutants from the construction phase of the project do not exceed the regional significance thresholds.

The project may require that multiple construction phases overlap. Several scenarios of overlapping activities that do not exceed the daily regional significance thresholds are provided on **Table 8** through **Table 14.**

MDAQMD does not have an established greenhouse gas significance threshold for construction and operational emissions. Based on a conversation with a representative of MDAQMD a suggested threshold of 100,000 metric tons of carbon dioxide equivalents per year was used for the purposes of the evaluation. Based on **Table 15** the annual quantity of carbon dioxide equivalents emitted from the project will not exceed 100,000 metric tons.

Federal Conformity

The Mojave Desert Air Basin ("basin") is designated as a non-attainment area for PM10 and ozone. The basin is designated as an attainment area for CO, nitrogen dioxide (NO_2) and sulfur dioxide (SO_2) and is unclassified for PM2.5. The attainment status of the criteria pollutants is summarized in **Table 16**.

Construction emissions do not exceed the de minimis thresholds established in 40 CFR 93.153. Construction emissions (in tons per year) for the project and the corresponding de minimis thresholds are provided in **Table 17**. Average annual daily NOx and VOC emissions (in tons per day) for 2011 are provided in the *2008 Federal 8-hour Ozone Attainment Plan* issued by Mohave Desert Air Quality Management District in June 2008. Average annual daily PM10 emissions (in tons per day) for 2000 are provided in the *Federal Particulate Matter (PM10) Attainment Plan* issued by Mohave Desert Air Quality Management District in July 1995. Annual emissions for NOx and VOC were estimated by taking the average daily planning inventory emissions for 2011 and multiplying by 365 days. The emissions from construction (in tons per year) are below 10 percent of the emission inventories for the basin.

Please call me or Daren with any comments or questions.

Sincerely,

Peter G. Stein
Vice President

Daren E. Jorgensen
President

Table 1 - Maximum Daily Unmitigated Construction Emissions During Horizontal Directional Drilling Activities, lbs/day

Activity	Source	VOC	CO	NOx	SO2	PM10 (Dust)	PM10 (Exh)	PM10 (Total)	PM2.5 (Dust)	PM2.5 (Exh)	PM2.5 (Total)	CO2	CH4
Site grading	Fugitive dust	0	0	0	0	2.50	0	2.50	0.53	0	0.53	0	0
Site grading	Off-road equipment	1.30	9.38	5.54	0.01	0	0.58	0.58	0	0.52	0.52	1,118.30	0.12
Site grading	Worker trips	0.08	0.08	0.77	1.07E-03	8.98E-03	0	8.98E-03	5.75E-03	0	5.75E-03	110.15	7.17E-03
Maximum daily emissions, pit		1.38	9.46	6.30	0.01	2.51	0.58	3.09	0.53	0.52	1.05	1,228.46	0.12
Pipeline installation	Fugitive dust	0	0	0	0	0.02	0	0.02	4.20E-03	0	4.20E-03	0	0
Pipeline installation	Off-road equipment	14.29	124.32	51.81	0.17	0	5.13	5.13	0	4.57	4.57	16,672.42	1.29
Pipeline installation	On-road equipment	1.06	13.02	4.30	0.02	0.63	0.57	1.20	0.54	0.53	1.07	1,774.90	0.05
Pipeline installation	Worker trips	0.08	0.08	0.77	1.07E-03	8.98E-03	0	8.98E-03	5.75E-03	0	5.75E-03	110.15	7.17E-03
Pipeline installation	Steel manufacturing	0	0	0	0	0	0	0	0	0	0	1,258.00	0
Maximum daily emissions, pipeline installation		15.44	137.42	56.87	0.19	0.66	5.70	6.36	0.55	5.09	5.65	18,557.47	1.35
Maximum daily emissions, horizontal directional drilling		15.44	137.42	56.87	0.19	2.51	5.70	6.36	0.55	5.09	5.65	18,557.47	1.35
Regional significance threshold		137	548	137	137	82	82	82	82	82	82	-	-

Table 2 - Maximum Daily Unmitigated Construction Emissions During Jack and Bore Activities at Reach I-B, lbs/day

Activity	Source	VOC	CO	NOx	SO2	PM10 (Dust)	PM10 (Exh)	PM10 (Total)	PM2.5 (Dust)	PM2.5 (Exh)	PM2.5 (Total)	CO2	CH4
Entrance pit	Fugitive dust	0	0	0	0	0.09	0	0.09	0.02	0	0.02	0	0
Entrance pit	Off-road equipment	1.63	13.54	6.21	0.02	0	0.65	0.65	0	0.58	0.58	1,489.35	0.15
Entrance pit	Worker trips	0.08	0.08	0.77	1.07E-03	8.98E-03	0	8.98E-03	5.75E-03	0	5.75E-03	110.15	7.17E-03
Maximum daily emissions, entrance pit		1.71	13.62	6.97	0.02	0.10	0.65	0.75	0.03	0.58	0.61	1,599.51	0.15
Exit pit	Fugitive dust	0	0	0	0	0.02	0	0.02	4.83E-03	0	4.83E-03	0	0
Exit pit	Off-road equipment	1.63	13.54	6.21	0.02	0	0.65	0.65	0	0.58	0.58	1,489.35	0.15
Exit pit	Worker trips	0.08	0.08	0.77	1.07E-03	8.98E-03	0	8.98E-03	5.75E-03	0	5.75E-03	110.15	7.17E-03
Maximum daily emissions, exit pit		1.71	13.62	6.97	0.02	0.03	0.65	0.68	0.01	0.58	0.59	1,599.51	0.15
Pipeline installation	Fugitive dust	0	0	0	0	0.02	0	0.02	3.15E-03	0	3.15E-03	0	0
Pipeline installation	Off-road equipment	8.09	66.80	37.27	0.10	0	3.54	3.54	0	3.15	3.15	9,204.11	0.73
Pipeline installation	On-road equipment	0.11	1.35	0.44	1.76E-03	0.07	0.06	0.12	0.06	0.05	0.11	183.39	5.07E-03
Pipeline installation	Worker trips	0.08	0.08	0.77	1.07E-03	8.98E-03	0	8.98E-03	5.75E-03	0	5.75E-03	110.15	7.17E-03
Pipeline installation	Steel manufacturing	0	0	0	0	0	0	0	0	0	0	510.00	0
Maximum daily emissions, pipeline installation		8.28	68.23	38.48	0.10	0.09	3.60	3.69	0.07	3.21	3.27	10,007.65	0.74
Maximum daily emissions, jack and bore		10.00	81.85	45.45	0.12	0.12	4.25	4.38	0.08	3.79	3.86	11,607.16	0.90
Regional significance threshold		137	548	137	137	82	82	82	82	82	82	-	-

Note 1: Maximum daily emissions based on overlapping exit pit and jack and bore operations.

Table 3 - Maximum Daily Unmitigated Construction Emissions During Jack and Bore Activities at Reach I-V, lbs/day

Activity	Source	VOC	CO	NOx	SO2	PM10 (Dust)	PM10 (Exh)	PM10 (Total)	PM2.5 (Dust)	PM2.5 (Exh)	PM2.5 (Total)	CO2	CH4
Entrance pit	Fugitive dust	0	0	0	0	0.09	0	0.09	0.02	0	0.02	0	0
Entrance pit	Off-road equipment	1.63	13.54	6.21	0.02	0	0.65	0.65	0	0.58	0.58	1,489.35	0.15
Entrance pit	Worker trips	0.08	0.08	0.77	1.07E-03	8.98E-03	0	8.98E-03	5.75E-03	0	5.75E-03	110.15	7.17E-03
Maximum daily emissions, entrance pit		1.71	13.62	6.97	0.02	0.10	0.65	0.75	0.03	0.58	0.61	1,599.51	0.15
Exit pit	Fugitive dust	0	0	0	0	0.02	0	0.02	4.83E-03	0	4.83E-03	0	0
Exit pit	Off-road equipment	1.63	13.54	6.21	0.02	0	0.65	0.65	0	0.58	0.58	1,489.35	0.15
Exit pit	Worker trips	0.08	0.08	0.77	1.07E-03	8.98E-03	0	8.98E-03	5.75E-03	0	5.75E-03	110.15	7.17E-03
Maximum daily emissions, exit pit		1.71	13.62	6.97	0.02	0.03	0.65	0.68	0.01	0.58	0.59	1,599.51	0.15
Pipeline installation	Fugitive dust	0	0	0	0	0.01	0	0.01	2.94E-03	0	2.94E-03	0	0
Pipeline installation	Off-road equipment	8.09	66.80	37.27	0.10	0	3.54	3.54	0	3.15	3.15	9,204.11	0.73
Pipeline installation	On-road equipment	0.11	1.30	0.43	1.71E-03	0.06	0.06	0.12	0.05	0.10	0.15	337.27	9.32E-03
Pipeline installation	Worker trips	0.08	0.08	0.77	1.07E-03	8.98E-03	0	8.98E-03	5.75E-03	0	5.75E-03	110.15	7.17E-03
Pipeline installation	Steel manufacturing	0	0	0	0	0	0	0	0	0	0	476.00	0
Maximum daily emissions, pipeline installation		8.28	68.19	38.47	0.10	0.09	3.60	3.69	0.06	3.25	3.32	10,127.53	0.75
Maximum daily emissions, jack and bore		9.99	81.81	45.44	0.12	0.12	4.25	4.37	0.07	3.83	3.91	11,727.04	0.90
Regional significance threshold		137	548	137	137	82	82	82	82	82	82	-	-

Note 1: Maximum daily emissions based on overlapping exit pit and jack and bore operations.

Table 4 - Maximum Daily Unmitigated Construction Emissions for Tunneling at Reach II Activities, lbs/day

Activity	Source	VOC	CO	NOx	SO2	PM10 (Dust)	PM10 (Exh)	PM10 (Total)	PM2.5 (Dust)	PM2.5 (Exh)	PM2.5 (Total)	CO2	CH4
Entrance pit	Fugitive dust	0	0	0	0	0.09	0	0.09	0.02	0	0.02	0	0
Entrance pit	Off-road equipment	2.15	17.03	8.50	0.02	0	0.91	0.91	0	0.81	0.81	1,890.17	0.19
Entrance pit	On-road equipment	5.56E-03	0.08	0.77	1.07E-03	8.98E-03	0	8.98E-03	5.75E-03	0	5.75E-03	110.15	7.17E-03
Entrance pit	Worker trips	0.08	0.08	0.77	1.07E-03	8.98E-03	0	8.98E-03	5.75E-03	0	5.75E-03	110.15	7.17E-03
Maximum daily emissions, entrance pit		2.24	17.19	10.03	0.02	0.11	0.91	1.02	0.03	0.81	0.84	2,110.48	0.21
Exit pit	Fugitive dust	0	0	0	0	0.02	0	0.02	4.83E-03	0	4.83E-03	0	0
Exit pit	Off-road equipment	2.15	17.03	8.50	0.02	0	0.91	0.91	0	0.81	0.81	1,890.17	0.19
Exit pit	On-road equipment	1.75E-03	1.71E-03	0.02	2.36E-05	1.98E-04	0	1.98E-04	1.26E-04	0	1.26E-04	2.42	1.58E-04
Exit pit	Worker trips	0.08	0.08	0.77	1.07E-03	8.98E-03	0	8.98E-03	5.75E-03	0	5.75E-03	110.15	7.17E-03
Maximum daily emissions, exit pit		2.23	17.11	9.29	0.02	0.03	0.91	0.95	0.01	0.81	0.82	2,002.75	0.20
Tunneling	Fugitive dust	0	0	0	0	0.11	0	0.11	0.02	0	0.02	0	0
Tunneling	Off-road equipment	2.05	21.63	12.16	0.04	0	0.88	0.88	0	0.78	0.78	3,959.02	0.19
Tunneling	On-road equipment	0.04	0.48	0.16	6.23E-04	0.02	0.02	0.04	0.02	0.02	0.04	64.92	1.79E-03
Tunneling	Worker trips	0.08	0.08	0.77	1.07E-03	8.98E-03	0	8.98E-03	5.75E-03	0	5.75E-03	110.15	7.17E-03
Maximum daily emissions, tunneling		2.17	22.19	13.09	0.04	0.14	0.90	1.04	0.05	0.80	0.85	4,134.10	0.19
Pipeline installation	Off-road equipment	4.21	12.10	14.76	0.04	0	1.66	1.66	0	1.48	1.48	4,047.44	0.38
Pipeline installation	On-road equipment	10.11	123.70	40.86	0.16	5.98	0	5.98	5.17	4.99	10.17	16,863.63	0.47
Pipeline installation	Worker trips	0.08	0.08	0.77	1.07E-03	8.98E-03	0	8.98E-03	5.75E-03	0	5.75E-03	110.15	7.17E-03
Pipeline installation	Steel manufacturing	0	0	0	0	0	0	0	0	0	0	2,278.00	0
Maximum daily emissions, pipeline installation		14.40	135.87	56.38	0.21	5.99	1.66	7.65	5.18	6.47	11.65	23,299.22	0.85
Maximum daily emissions		14.40	135.87	56.38	0.21	5.99	1.66	7.65	5.18	6.47	11.65	23,299.22	0.85
Regional significance threshold		137	548	137	137	82	82	82	82	82	82	-	-

Table 5 - Maximum Daily Unmitigated Construction Emissions for Trenching at Reach III Activities, lbs/day

Activity	Source	VOC	CO	NOx	SO2	PM10 (Dust)	PM10 (Exh)	PM10 (Total)	PM2.5 (Dust)	PM2.5 (Exh)	PM2.5 (Total)	CO2	CH4
Trenching activities	Fugitive dust	0	0	0	0	0.04	0	0.04	8.61E-03	0	8.61E-03	0	0
Trenching activities	Off-road equipment	3.67	30.37	14.85	0.04	0	1.49	1.49	0	1.33	1.33	4,069.37	0.33
Trenching activities	Worker trips	0.10	0.09	0.92	1.29E-03	0.01	0	0.01	6.90E-03	0	6.90E-03	132.18	8.60E-03
Trenching activities	On-road equipment	5.56E-03	0.07	0.02	8.89E-05	3.29E-03	2.98E-03	6.27E-03	2.85E-03	2.75E-03	5.59E-03	9.27	2.56E-04
Trenching activities	Steel manufacturing	0	0	0	0	0	0	0	0	0	0	1,190.00	0
Trenching activities	Pavement off-gas	0.01	0	0	0	0	0	0	0	0	0	0	0
Maximum daily emissions		3.78	30.53	15.79	0.05	0.06	1.50	1.55	0.02	1.33	1.35	5,400.83	0.34
Regional significance threshold		137	548	137	137	82	82	82	82	82	82	-	-

Table 6 - Maximum Daily Unmitigated Construction Emissions for Trenching at Reach V Activities, lbs/day

Activity	Source	VOC	CO	NOx	SO2	PM10 (Dust)	PM10 (Exh)	PM10 (Total)	PM2.5 (Dust)	PM2.5 (Exh)	PM2.5 (Total)	CO2	CH4
Trenching activities	Fugitive dust	0	0	0	0	4.00E-03	0	4.00E-03	8.40E-04	0	8.40E-04	0	0
Trenching activities	Off-road equipment	3.67	30.37	14.85	0.04	0	1.49	1.49	0	1.33	1.33	4,069.37	0.33
Trenching activities	Worker trips	0.10	0.09	0.92	1.29E-03	0.01	0	0.01	6.90E-03	0	6.90E-03	132.18	8.60E-03
Trenching activities	On-road equipment	5.56E-03	0.07	0.02	8.89E-05	3.29E-03	2.98E-03	6.27E-03	2.85E-03	2.75E-03	5.59E-03	9.27	2.56E-04
Trenching activities	Steel manufacturing	0	0	0	0	0	0	0	0	0	0	102.00	0
Trenching activities	Pavement off-gas	1.05E-03	0	0	0	0	0	0	0	0	0	0	0
Maximum daily emissions		3.77	30.53	15.79	0.05	0.02	1.50	1.51	0.01	1.33	1.34	4,312.83	0.34
Regional significance threshold		137	548	137	137	82	82	82	82	82	82	-	-

Table 7 - Maximum Daily Unmitigated Construction Emissions for Equipment Removal Activities, lbs/day

Activity	Source	VOC	CO	NOx	SO2	PM10 (Dust)	PM10 (Exh)	PM10 (Total)	PM2.5 (Dust)	PM2.5 (Exh)	PM2.5 (Total)	CO2	CH4
Equipment removal activities	Off-road equipment	6.84	57.51	23.25	0.07	0	2.55	2.55	0	2.27	2.27	6,993.34	0.62
Equipment removal activities	Worker trips	0.08	0.08	0.77	1.07E-03	8.98E-03	0	8.98E-03	5.75E-03	0	5.75E-03	110.15	7.17E-03
Equipment removal activities	On-road equipment	0.06	0.74	0.25	9.70E-04	0.04	0.03	0.07	0.03	0.03	0.06	101.18	2.80E-03
Maximum daily emissions		6.98	58.33	24.27	0.08	0.04	2.59	2.63	0.04	2.30	2.34	7,204.68	0.63
Regional significance threshold		137	548	137	137	82	82	82	82	82	82	-	-

Table 8 - Maximum Daily Construction Emissions for Horizontal Directional Drilling and Tunneling at Reach II, lbs/day

Activity	Source	VOC	CO	NOx	SO2	PM10 (Dust)	PM10 (Exh)	PM10 (Total)	PM2.5 (Dust)	PM2.5 (Exh)	PM2.5 (Total)	CO2	CH4
Horizontal directional drilling	Site grading	1.38	9.46	6.30	0.01	2.51	0.58	3.09	0.53	0.52	1.05	1,228.46	0.12
Tunneling at reach II	Entrance pit	2.24	17.19	10.03	0.02	0.11	0.91	1.02	0.03	0.81	0.84	2,110.48	0.21
Maximum daily emissions		3.61	26.64	16.33	0.04	2.62	1.50	4.12	0.56	1.33	1.89	3,338.93	0.33
Regional significance threshold		137	548	137	137	82	82	82	82	82	82	-	-

Table 9 - Maximum Daily Construction Emissions for Horizontal Directional Drilling and Tunneling at Reach II, lbs/day

Activity	Source	VOC	CO	NOx	SO2	PM10 (Dust)	PM10 (Exh)	PM10 (Total)	PM2.5 (Dust)	PM2.5 (Exh)	PM2.5 (Total)	CO2	CH4
Horizontal directional drilling	Pipeline installation	15.44	137.42	56.87	0.19	0.66	5.70	6.36	0.55	5.09	5.65	18,557.47	1.35
Tunneling at reach II	Entrance pit	2.24	17.19	10.03	0.02	0.11	0.91	1.02	0.03	0.81	0.84	2,110.48	0.21
Maximum daily emissions		17.67	154.60	66.91	0.22	0.77	6.62	7.39	0.59	5.91	6.49	20,667.95	1.55
Regional significance threshold		137	548	137	137	82	82	82	82	82	82	-	-

Table 10 - Maximum Daily Construction Emissions for Horizontal Directional Drilling and Tunneling at Reach II, lbs/day

Activity	Source	VOC	CO	NOx	SO2	PM10 (Dust)	PM10 (Exh)	PM10 (Total)	PM2.5 (Dust)	PM2.5 (Exh)	PM2.5 (Total)	CO2	CH4
Horizontal directional drilling	Pipeline installation	15.44	137.42	56.87	0.19	0.66	5.70	6.36	0.55	5.09	5.65	18,557.47	1.35
Tunneling at reach II	Exit pit	2.23	17.11	9.29	0.02	0.03	0.91	0.95	0.01	0.81	0.82	2,002.75	0.20
Tunneling at reach II	Tunneling	2.17	22.19	13.09	0.04	0.14	0.90	1.04	0.05	0.80	0.85	4,134.10	0.19
Maximum daily emissions		19.84	176.71	79.24	0.26	0.83	7.52	8.35	0.61	6.71	7.32	24,694.32	1.74
Regional significance threshold		137	548	137	137	82	82	82	82	82	82	-	-

Table 11 - Maximum Daily Construction Emissions for Jack and Bore Reach I-B, Jack and Bore Reach I-V, and Tunneling Exit Pit at Reach II, lbs/day

Activity	Source	VOC	CO	NOx	SO2	PM10 (Dust)	PM10 (Exh)	PM10 (Total)	PM2.5 (Dust)	PM2.5 (Exh)	PM2.5 (Total)	CO2	CH4
Jack and bore reach I-B	Entrance pit	1.71	13.62	6.97	0.02	0.10	0.65	0.75	0.03	0.58	0.61	1,599.51	0.15
Jack and bore reach I-V	Entrance pit	1.71	13.62	6.97	0.02	0.10	0.65	0.75	0.03	0.58	0.61	1,599.51	0.15
Tunneling at reach II	Exit pit	2.23	17.11	9.29	0.02	0.03	0.91	0.95	0.01	0.81	0.82	2,002.75	0.20
Maximum daily emissions		5.66	44.35	23.23	0.06	0.23	2.22	2.45	0.06	1.98	2.04	5,201.76	0.51
Regional significance threshold		137	548	137	137	82	82	82	82	82	82	-	-

Table 12 - Maximum Daily Construction Emissions for Jack and Bore Reach I-B, Jack and Bore Reach I-V, and Tunneling at Reach II, lbs/day

Activity	Source	VOC	CO	NOx	SO2	PM10 (Dust)	PM10 (Exh)	PM10 (Total)	PM2.5 (Dust)	PM2.5 (Exh)	PM2.5 (Total)	CO2	CH4
Jack and bore reach I-B	Entrance pit	1.71	13.62	6.97	0.02	0.10	0.65	0.75	0.03	0.58	0.61	1,599.51	0.15
Jack and bore reach I-V	Entrance pit	1.71	13.62	6.97	0.02	0.10	0.65	0.75	0.03	0.58	0.61	1,599.51	0.15
Tunneling at reach II	Tunneling	2.17	22.19	13.09	0.04	0.14	0.90	1.04	0.05	0.80	0.85	4,134.10	0.19
Maximum daily emissions		5.60	49.43	27.03	0.08	0.34	2.21	2.55	0.10	1.97	2.06	7,333.12	0.50
Regional significance threshold		137	548	137	137	82	82	82	82	82	82	-	-

Table 13 - Maximum Daily Construction Emissions for Jack and Bore Reach I-B and Jack and Bore Reach I-V, lbs/day

Activity	Source	VOC	CO	NOx	SO2	PM10 (Dust)	PM10 (Exh)	PM10 (Total)	PM2.5 (Dust)	PM2.5 (Exh)	PM2.5 (Total)	CO2	CH4
Jack and bore reach I-B	Exit pit	1.71	13.62	6.97	0.02	0.03	0.65	0.68	0.01	0.58	0.59	1,599.51	0.15
Jack and bore reach I-V	Exit pit	1.71	13.62	6.97	0.02	0.03	0.65	0.68	0.01	0.58	0.59	1,599.51	0.15
Jack and bore reach I-B	Pipeline installation	8.28	68.23	38.48	0.10	0.09	3.60	3.69	0.07	3.21	3.27	10,007.65	0.74
Jack and bore reach I-V	Pipeline installation	8.28	68.19	38.47	0.10	0.09	3.60	3.69	0.06	3.25	3.32	10,127.53	0.75
Maximum daily emissions		19.99	163.65	90.90	0.24	0.24	8.51	8.75	0.15	7.62	7.77	23,334.19	1.80
Regional significance threshold		137	548	137	137	82	82	82	82	82	82	-	-

Table 14- Maximum Daily Construction Emissions for Tunnel Installation at Tunneling at Reach II and Trenching, lbs/day

Activity	Source	VOC	CO	NOx	SO2	PM10 (Dust)	PM10 (Exh)	PM10 (Total)	PM2.5 (Dust)	PM2.5 (Exh)	PM2.5 (Total)	CO2	CH4
Tunnel installation	Pipeline installation	14.40	135.87	56.38	0.21	5.99	1.66	7.65	5.18	6.47	11.65	23,299.22	0.85
Trenching activities at reach III	Trenching activities	3.78	30.53	15.79	0.05	0.06	1.50	1.55	0.02	1.33	1.35	5,400.83	0.34
Trenching activities at reach V	Trenching activities	3.77	30.53	15.79	0.05	0.02	1.50	1.51	0.01	1.33	1.34	4,312.83	0.34
Maximum daily emissions		21.96	196.93	87.97	0.30	6.06	4.65	10.72	5.21	9.14	14.34	33,012.88	1.53
Regional significance threshold		137	548	137	137	82	82	82	82	82	82	-	-

Table 15 - Maximum Unmitigated CO_2 Equivalent Construction Emissions

Phase	Activity	Source	Days	CO_2, lbs/day	CH_4, lbs/day	CO_2 eq, lbs	CO_2 eq, tonnes
Horizontal directional drilling	Site grading	Fugitive dust	3	0	0	0	0
Horizontal directional drilling	Site grading	Off-road equipment	3	1,118.30	0.12	3,362	1.52
Horizontal directional drilling	Site grading	Worker trips	3	110.15	0.01	331	0.15
Horizontal directional drilling	Horizontal directional drilling	Fugitive dust	63	0	0	0	0
Horizontal directional drilling	Horizontal directional drilling	Off-road equipment	63	16,672.42	1.29	1,052,069	477.13
Horizontal directional drilling	Horizontal directional drilling	On-road equipment	63	1,774.90	0.05	111,883	50.74
Horizontal directional drilling	Horizontal directional drilling	Worker trips	63	110.15	0.01	6,949	3.15
Horizontal directional drilling	Horizontal directional drilling	Steel manufacturing	63	1,258.00	0	79,254	35.94
Jack and bore reach I-B	Entrance pit	Fugitive dust	15	0	0	0	0
Jack and bore reach I-B	Entrance pit	Off-road equipment	15	1,489.35	0.15	22,387	10.15
Jack and bore reach I-B	Entrance pit	Worker trips	15	110.15	0.01	1,655	0.75
Jack and bore reach I-B	Exit pit	Fugitive dust	15	0	0	0	0
Jack and bore reach I-B	Exit pit	Off-road equipment	15	1,489.35	0.15	22,387	10.15
Jack and bore reach I-B	Exit pit	Worker trips	15	110.15	0.01	1,655	0.75
Jack and bore reach I-B	Jack and bore	Fugitive dust	15	0	0	0	0
Jack and bore reach I-B	Jack and bore	Off-road equipment	15	9,204.11	0.73	138,292	62.72
Jack and bore reach I-B	Jack and bore	On-road equipment	15	183.39	0.01	2,752	1.25
Jack and bore reach I-B	Jack and bore	Worker trips	15	110.15	0.01	1,655	0.75
Jack and bore reach I-B	Jack and bore	Steel manufacturing	15	510.00	0	7,650	3.47
Jack and bore reach I-V	Entrance pit	Fugitive dust	15	0	0	0	0
Jack and bore reach I-V	Entrance pit	Off-road equipment	15	1,489.35	0.15	22,387	10.15
Jack and bore reach I-V	Entrance pit	Worker trips	15	110.15	0.01	1,655	0.75
Jack and bore reach I-V	Exit pit	Fugitive dust	15	0	0	0	0
Jack and bore reach I-V	Exit pit	Off-road equipment	15	1,489.35	0.15	22,387	10.15
Jack and bore reach I-V	Exit pit	Worker trips	15	110.15	0.01	1,655	0.75

Phase	Activity	Source	Days	CO_2, lbs/day	CH_4, lbs/day	CO_2 eq, lbs	CO_2 eq, tonnes
Jack and bore reach I-V	Jack and bore	Fugitive dust	15	0	0	0	0
Jack and bore reach I-V	Jack and bore	Off-road equipment	15	9,204.11	0.73	138,292	62.72
Jack and bore reach I-V	Jack and bore	On-road equipment	15	337.27	0.01	5,062	2.30
Jack and bore reach I-V	Jack and bore	Worker trips	15	110.15	0.01	1,655	0.75
Jack and bore reach I-V	Jack and bore	Steel manufacturing	15	476.00	0	7,140	3.24
Tunneling	Entrance pit	Fugitive dust	42	0	0	0	0
Tunneling	Entrance pit	Off-road equipment	42	1,890.17	0.19	79,558	36.08
Tunneling	Entrance pit	On-road equipment	42	110.15	0.01	4,633	2.10
Tunneling	Entrance pit	Worker trips	42	110.15	0.01	4,633	2.10
Tunneling	Exit pit	Fugitive dust	15	0	0	0	0
Tunneling	Exit pit	Off-road equipment	15	1,890.17	0.19	28,414	12.89
Tunneling	Exit pit	On-road equipment	15	2.42	1.58E-04	36	0.02
Tunneling	Exit pit	Worker trips	15	110.15	0.01	1,655	0.75
Tunneling	Tunneling	Fugitive dust	42	0	0	0	0
Tunneling	Tunneling	Off-road equipment	42	3,959.02	0.19	166,442	75.48
Tunneling	Tunneling	On-road equipment	42	64.92	1.79E-03	2,728	1.24
Tunneling	Tunneling	Worker trips	42	110.15	0.01	4,633	2.10
Tunneling	Tunnel installation	Off-road equipment	21	4,047.44	0.38	85,164	38.62
Tunneling	Tunnel installation	On-road equipment	21	16,863.63	0.47	354,342	160.70
Tunneling	Tunnel installation	Worker trips	21	110.15	0.01	2,316	1.05
Tunneling	Tunnel installation	Steel manufacturing	21	2,278.00	0	47,838	21.70
Trenching reach III	Trenching	Fugitive dust	22	0	0	0	0
Trenching reach III	Trenching	Off-road equipment	22	4,069.37	0.33	89,679	40.67
Trenching reach III	Trenching	Worker trips	22	132.18	0.01	2,912	1.32
Trenching reach III	Trenching	On-road equipment	22	9.27	2.56E-04	204	0.09

Phase	Activity	Source	Days	CO_2, lbs/day	CH_4, lbs/day	CO_2 eq, lbs	CO_2 eq, tonnes
Trenching reach III	Trenching	Steel manufacturing	22	1,190.00	0	26,180	11.87
Trenching reach III	Trenching	Pavement off-gas	10	0	0	0	0
Trenching reach V	Trenching	Fugitive dust	22	0	0	0	0
Trenching reach V	Trenching	Off-road equipment	22	4,069.37	0.33	89,679	40.67
Trenching reach V	Trenching	Worker trips	22	132.18	0.01	2,912	1.32
Trenching reach V	Trenching	On-road equipment	22	9.27	2.56E-04	204	0.09
Trenching reach V	Trenching	Steel manufacturing	22	102.00	0	2,244	1.02
Trenching reach V	Trenching	Pavement off-gas	10	0	0	0	0
Equipment removal	Equipment removal	Off-road equipment	10	6,993.34	0.62	70,063	31.77
Equipment removal	Equipment removal	Worker trips	10	110.15	0.01	1,103	0.50
Equipment removal	Equipment removal	On-road equipment	10	101.18	2.80E-03	1,012	0.46
					Total	2,721,098	1,234.06

Table 16 - Attainment Status for Criteria Pollutants

Pollutant	Status
CO	Attainment
SOx	Attainment
NOx	Attainment
PM10	Non-attainment (moderate)
PM2.5	Unclassified
Ozone (1-hr)	Non-attainment (severe)
Ozone (8-hr)	Non-attainment (severe)

Table 17 - Annual Unmitigated Construction Emissions, tons/year

Activity	Source	Days	VOC	NOx	CO	SO2	PM10 (Dust)	PM10 (Exh)	PM10 (Total)	PM2.5 (Dust)	PM2.5 (Exh)	PM2.5 (Total)	CO2	CH4	NOx/VOC (Ozone)
Horizontal directional drilling	Fugitive dust	3	0	0	0	0	3.75E-03	0	3.75E-03	7.88E-04	0	7.88E-04	0	0	0
Horizontal directional drilling	Off-road equipment	3	1.95E-03	0.01	8.30E-03	1.88E-05	0	8.74E-04	8.74E-04	0	7.78E-04	7.78E-04	1.68	1.76E-04	0.02
Horizontal directional drilling	Worker trips	3	1.19E-04	1.16E-04	1.15E-03	1.61E-06	1.35E-05	0	1.35E-05	8.62E-06	0	8.62E-06	0.17	1.08E-05	2.36E-04
Horizontal directional drilling	Fugitive dust	63	0	0	0	0	6.30E-04	0	6.30E-04	1.32E-04	0	1.32E-04	0	0	0
Horizontal directional drilling	Off-road equipment	63	0.45	3.92	1.63	5.51E-03	0	0.16	0.16	0	0.14	0.14	525.18	0.04	4.37
Horizontal directional drilling	On-road equipment	63	0.03	0.41	0.14	5.36E-04	0.02	0.02	0.04	0.02	0.02	0.03	55.91	1.55E-03	0.44
Horizontal directional drilling	Worker trips	63	2.51E-03	2.44E-03	0.02	3.38E-05	2.83E-04	0	2.83E-04	1.81E-04	0	1.81E-04	3.47	2.26E-04	4.95E-03
Horizontal directional drilling	Steel manufacturing	63	0	0	0	0	0	0	0	0	0	0	39.63	0	0
Jack and bore reach I-B	Fugitive dust	15	0	0	0	0	6.90E-04	0	6.90E-04	1.45E-04	0	1.45E-04	0	0	0
Jack and bore reach I-B	Off-road equipment	15	0.01	0.10	0.05	1.21E-04	0	4.90E-03	4.90E-03	0	4.36E-03	4.36E-03	11.17	1.11E-03	0.11
Jack and bore reach I-B	Worker trips	15	5.97E-04	5.82E-04	5.74E-03	8.05E-06	6.73E-05	0	6.73E-05	4.31E-05	0	4.31E-05	0.83	5.38E-05	1.18E-03
Jack and bore reach I-B	Fugitive dust	15	0	0	0	0	1.73E-04	0	1.73E-04	3.62E-05	0	3.62E-05	0	0	0
Jack and bore reach I-B	Off-road equipment	15	0.01	0.10	0.05	1.21E-04	0	4.90E-03	4.90E-03	0	4.36E-03	4.36E-03	11.17	1.11E-03	0.11
Jack and bore reach I-B	Worker trips	15	5.97E-04	5.82E-04	5.74E-03	8.05E-06	6.73E-05	0	6.73E-05	4.31E-05	0	4.31E-05	0.83	5.38E-05	1.18E-03
Jack and bore reach I-B	Fugitive dust	15	0	0	0	0	1.13E-04	0	1.13E-04	2.36E-05	0	2.36E-05	0	0	0
Jack and bore reach I-B	Off-road equipment	15	0.06	0.50	0.28	7.53E-04	0	0.03	0.03	0	0.02	0.02	69.03	5.48E-03	0.56
Jack and bore reach I-B	On-road equipment	15	8.25E-04	0.01	3.33E-03	1.32E-05	4.88E-04	4.42E-04	9.30E-04	4.22E-04	4.07E-04	8.29E-04	1.38	3.80E-05	0.01
Jack and bore reach I-B	Worker trips	15	5.97E-04	5.82E-04	5.74E-03	8.05E-06	6.73E-05	0	6.73E-05	4.31E-05	0	4.31E-05	0.83	5.38E-05	1.18E-03
Jack and bore reach I-B	Steel manufacturing	15	0	0	0	0	0	0	0	0	0	0	3.83	0	0
Jack and bore reach I-V	Fugitive dust	15	0	0	0	0	6.90E-04	0	6.90E-04	1.45E-04	0	1.45E-04	0	0	0
Jack and bore reach I-V	Off-road equipment	15	0.01	0.10	0.05	1.21E-04	0	4.90E-03	4.90E-03	0	4.36E-03	4.36E-03	11.17	1.11E-03	0.11
Jack and bore reach I-V	Worker trips	15	5.97E-04	5.82E-04	5.74E-03	8.05E-06	6.73E-05	0	6.73E-05	4.31E-05	0	4.31E-05	0.83	5.38E-05	1.18E-03
Jack and bore reach I-V	Fugitive dust	15	0	0	0	0	1.73E-04	0	1.73E-04	3.62E-05	0	3.62E-05	0	0	0

Activity	Source	Days	VOC	NOx	CO	SO2	PM10 (Dust)	PM10 (Exh)	PM10 (Total)	PM2.5 (Dust)	PM2.5 (Exh)	PM2.5 (Total)	CO2	CH4	NOx/VOC (Ozone)
Jack and bore reach I-V	Off-road equipment	15	0.01	0.10	0.05	1.21E-04	0	4.90E-03	4.90E-03	0	4.36E-03	4.36E-03	11.17	1.11E-03	0.11
Jack and bore reach I-V	Worker trips	15	5.97E-04	5.82E-04	5.74E-03	8.05E-06	6.73E-05	0	6.73E-05	4.31E-05	0	4.31E-05	0.83	5.38E-05	1.18E-03
Jack and bore reach I-V	Fugitive dust	15	0	0	0	0	1.05E-04	0	1.05E-04	2.21E-05	0	2.21E-05	0	0	0
Jack and bore reach I-V	Off-road equipment	15	0.06	0.50	0.28	7.53E-04	0	0.03	0.03	0	0.02	0.02	69.03	5.48E-03	0.56
Jack and bore reach I-V	On-road equipment	15	8.00E-04	9.79E-03	3.23E-03	1.28E-05	4.73E-04	4.29E-04	9.02E-04	4.09E-04	7.49E-04	1.16E-03	2.53	6.99E-05	0.01
Jack and bore reach I-V	Worker trips	15	5.97E-04	5.82E-04	5.74E-03	8.05E-06	6.73E-05	0	6.73E-05	4.31E-05	0	4.31E-05	0.83	5.38E-05	1.18E-03
Jack and bore reach I-V	Steel manufacturing	15	0	0	0	0	0	0	0	0	0	0	3.57	0	0
Tunneling	Fugitive dust	42	0	0	0	0	1.93E-03	0	1.93E-03	4.06E-04	0	4.06E-04	0	0	0
Tunneling	Off-road equipment	42	0.05	0.36	0.18	4.37E-04	0	0.02	0.02	0	0.02	0.02	39.69	4.08E-03	0.40
Tunneling	On-road equipment	42	1.17E-04	1.63E-03	0.02	2.25E-05	1.89E-04	0	1.89E-04	1.21E-04	0	1.21E-04	2.31	1.51E-04	1.75E-03
Tunneling	Worker trips	42	1.67E-03	1.63E-03	0.02	2.25E-05	1.89E-04	0	1.89E-04	1.21E-04	0	1.21E-04	2.31	1.51E-04	3.30E-03
Tunneling	Fugitive dust	15	0	0	0	0	1.73E-04	0	1.73E-04	3.62E-05	0	3.62E-05	0	0	0
Tunneling	Off-road equipment	15	0.02	0.13	0.06	1.56E-04	0	6.86E-03	6.86E-03	0	6.10E-03	6.10E-03	14.18	1.46E-03	0.14
Tunneling	On-road equipment	15	1.31E-05	1.28E-05	1.26E-04	1.77E-07	1.48E-06	0	1.48E-06	9.49E-07	0	9.49E-07	0.02	1.18E-06	2.59E-05
Tunneling	Worker trips	15	5.97E-04	5.82E-04	5.74E-03	8.05E-06	6.73E-05	0	6.73E-05	4.31E-05	0	4.31E-05	0.83	5.38E-05	1.18E-03
Tunneling	Fugitive dust	42	0	0	0	0	2.25E-03	0	2.25E-03	4.72E-04	0	4.72E-04	0	0	0
Tunneling	Off-road equipment	42	0.04	0.45	0.26	8.80E-04	0	0.02	0.02	0	0.02	0.02	83.14	3.89E-03	0.50
Tunneling	On-road equipment	42	8.17E-04	0.01	3.30E-03	1.31E-05	4.84E-04	4.38E-04	9.22E-04	4.18E-04	4.04E-04	8.22E-04	1.36	3.77E-05	0.01
Tunneling	Worker trips	42	1.67E-03	1.63E-03	0.02	2.25E-05	1.89E-04	0	1.89E-04	1.21E-04	0	1.21E-04	2.31	1.51E-04	3.30E-03
Tunneling	Off-road equipment	21	0.04	0.13	0.15	4.53E-04	0	0.02	0.02	0	0.02	0.02	42.50	3.99E-03	0.17
Tunneling	On-road equipment	21	0.11	1.30	0.43	1.70E-03	0.06	0	0.06	0.05	0.05	0.11	177.07	4.89E-03	1.40
Tunneling	Worker trips	21	8.36E-04	8.15E-04	8.04E-03	1.13E-05	9.43E-05	0	9.43E-05	6.04E-05	0	6.04E-05	1.16	7.53E-05	1.65E-03
Tunneling	Steel manufacturing	21	0	0	0	0	0	0	0	0	0	0	23.92	0	0

Activity	Source	Days	VOC	NOx	CO	SO2	PM10 (Dust)	PM10 (Exh)	PM10 (Total)	PM2.5 (Dust)	PM2.5 (Exh)	PM2.5 (Total)	CO2	CH4	NOx/VOC (Ozone)
Trenching reach III	Fugitive dust	22	0	0	0	0	4.51E-04	0	4.51E-04	9.47E-05	0	9.47E-05	0	0	0
Trenching reach III	Off-road equipment	22	0.04	0.33	0.16	4.80E-04	0	0.02	0.02	0	0.01	0.01	44.76	3.64E-03	0.37
Trenching reach III	Worker trips	22	1.05E-03	1.02E-03	0.01	1.42E-05	1.19E-04	0	1.19E-04	7.59E-05	0	7.59E-05	1.45	9.46E-05	2.08E-03
Trenching reach III	On-road equipment	22	6.12E-05	7.48E-04	2.47E-04	9.78E-07	3.62E-05	3.28E-05	6.90E-05	3.13E-05	3.02E-05	6.15E-05	0.10	2.82E-06	8.10E-04
Trenching reach III	Steel manufacturing	22	0	0	0	0	0	0	0	0	0	0	13.09	0	0
Trenching reach III	Pavement off-gas	10	5.37E-05	0	0	0	0	0	0	0	0	0	0	0	5.37E-05
Trenching reach V	Fugitive dust	22	0	0	0	0	4.40E-05	0	4.40E-05	9.24E-06	0	9.24E-06	0	0	0
Trenching reach V	Off-road equipment	22	0.04	0.33	0.16	4.80E-04	0	0.02	0.02	0	0.01	0.01	44.76	3.64E-03	0.37
Trenching reach V	Worker trips	22	1.05E-03	1.02E-03	0.01	1.42E-05	1.19E-04	0	1.19E-04	7.59E-05	0	7.59E-05	1.45	9.46E-05	2.08E-03
Trenching reach V	On-road equipment	22	6.12E-05	7.48E-04	2.47E-04	9.78E-07	3.62E-05	3.28E-05	6.90E-05	3.13E-05	3.02E-05	6.15E-05	0.10	2.82E-06	8.10E-04
Trenching reach V	Steel manufacturing	22	0	0	0	0	0	0	0	0	0	0	1.12	0	0
Trenching reach V	Pavement off-gas	10	5.24E-06	0	0	0	0	0	0	0	0	0	0	0	5.24E-06
Equipment removal	Off-road equipment	10	0.03	0.29	0.12	3.68E-04	0	0.01	0.01	0	0.01	0.01	34.97	3.09E-03	0.32
Equipment removal	Worker trips	10	3.98E-04	3.88E-04	3.83E-03	5.36E-06	4.49E-05	0	4.49E-05	2.87E-05	0	2.87E-05	0.55	3.58E-05	7.86E-04
Equipment removal	On-road equipment	10	3.03E-04	3.71E-03	1.23E-03	4.85E-06	1.79E-04	1.63E-04	3.42E-04	1.55E-04	1.50E-04	3.05E-04	0.51	1.40E-05	4.01E-03
Total (tons/year)			1.04	9.12	4.20	1.33E-02	0.10	0.36	0.46	0.08	0.38	0.45	1,358.70	0.09	10.16
De minimus threshold (tons/year)			-	100	100	100	-	-	100	-	-	-	-	-	25
Approximate Mojave Desert Air Basin emissions (tons/year)			17,341	47,096	-	-	-	-	85,021	-	-	-	-	-	64,437

Attachment 1

Horizontal Directional Drilling

Site Grading Activities

Emissions of Fugitive Dust (PM10) from Grading

Y = (N)(EF)

where,
Y = Daily emissions of PM10 fugitive dust, lbs/day.
N = Number of acres disturbed per day during site grading, 0.25 acres.
EF = Emission factor for PM10 fugitive dust during site grading, 10 lbs/acre-day (URBEMIS 2007, V9.2.4).

Y= (0.25 acres)(10 lbs/acre-day) = 2.5 lbs/day

Emissions of Fugitive Dust (PM2.5) from Grading

Y = (N)(EF)

where,
Y = Daily emissions of PM2.5 fugitive dust, lbs/day.
N = Number of acres disturbed per day during site grading, 0.25 acres.
EF = Emission factor for PM2.5 fugitive dust during site grading, 2.1 lbs/acre-day (URBEMIS 2007, V9.2.4).

Y= (0.25 acres)(2.1 lbs/acre-day) = 0.53 lbs/day

Emissions from Off Road Equipment

Y = (N)(H)(EF)

where,
Y = Daily emissions of criteria pollutant, lbs/day.
N = Number of pieces of equipment in a specified equipment category.
H = Hours per day of equipment operation.
EF = Emission factor for criteria pollutant, lb/hr (CEQA Air Quality Handbook (SCAQMD 1993) Table A9-8 Off-road Mobile Sources Emission Factors).

Equipment	Number	Hours	URBEMIS Designation	Emission factors, lb/hr								Emissions, lbs/day							
				VOC	CO	NOx	SOx	PM10	PM2.5	CO2	CH4	VOC	CO	NOx	SOx	PM10	PM2.5	CO2	CH4
Backhoe	1	6	Tractors/Loaders/Backhoes Composite	0.0862	0.3824	0.5816	0.0008	0.0435	0.0387	66.8029	0.0078	0.52	2.29	3.49	4.65E-03	0.26	0.23	400.82	0.05
Excavator	1	6	Excavators Composite	0.1300	0.5401	0.9817	0.0013	0.0536	0.0477	119.5809	0.0117	0.78	3.24	5.89	7.89E-03	0.32	0.29	717.49	0.07

Emissions from On Road Equipment

Y = (N)(D)(EF)

where,
Y = Daily emissions of criteria pollutant, lbs/day.
N = Number of trips per day.
D = Distance per trip, miles.
EF = Emission factor for criteria pollutant, lb/mile (EMFAC 2007 (v2.3) Emission Factors for On-Road Vehicles, SCAQMD).

Type	Year	Total daily round trips	Miles during trip	Emission factors (lbs/mile)										Emissions (lbs/day)											
				VOC	CO	NOx	SOx	PM10, tire and brake	PM10, exhaust	PM2.5, tire and brake	PM2.5, exhaust	CO2	CH4	VOC	CO	NOx	SOx	PM10, tire and brake	PM10, exhaust	Total PM10	PM2.5, tire and brake	PM2.5, exhaust	Total PM2.5	CO2	CH4
Worker trips	2012	5	20	0.000796	0.007655	0.000776	0.000011	0.000090		0.000057		1.101525	0.000072	0.08	0.77	0.08	1.07E-03	8.98E-03	0	8.98E-03	5.75E-03	0	5.75E-03	110.15	7.17E-03

Horizontal Directional Drilling Activities

Emissions of Fugitive Dust (PM10) from Excavation

Y = (N)(EF)

where,
Y = Daily emissions of PM10 fugitive dust, lbs/day.
N = Number of acres disturbed per day during soil excavation, 0.002 acres.
EF = Emission factor for PM10 fugitive dust during excavation, 10 lbs/acre-day (URBEMIS 2007, V9.2.4).

Y= (0.002 acres)(10 lbs/acre-day) = 0.02 lbs/day

Emissions of Fugitive Dust (PM2.5) from Excavation

Y = (N)(EF)

where,
Y = Daily emissions of PM2.5 fugitive dust, lbs/day.
N = Number of acres disturbed per day during soil excavation, 0.002 acres.
EF = Emission factor for PM2.5 fugitive dust during excavation, 2.1 lbs/acre-day (URBEMIS 2007, V9.2.4).

Y= (0.002 acres)(2.1 lbs/acre-day) = 0.0042 lbs/day

Emissions from Off Road Equipment

Y = (N)(H)(EF)

where,
Y = Daily emissions of criteria pollutant, lbs/day.
N = Number of pieces of equipment in a specified equipment category.
H = Hours per day of equipment operation.
EF = Emission factor for criteria pollutant, lb/hr (CEQA Air Quality Handbook (SCAQMD 1993) Table A9-8 Off-road Mobile Sources Emission Factors).

				Emission factors, lb/hr								Emissions, lbs/day							
Equipment	Number	Hours	URBEMIS Designation	VOC	CO	NOx	SOx	PM10	PM2.5	CO2	CH4	VOC	CO	NOx	SOx	PM10	PM2.5	CO2	CH4
Horizontal directional drilling rig	1	24	Bore/Drill Rigs Composite	0.0854	0.5068	0.9013	0.0017	0.0367	0.0327	164.9593	0.0077	2.05	12.16	21.63	0.04	0.88	0.78	3,959.02	0.19
Generator	1	6	Generator Sets Composite	0.0832	0.3121	0.5779	0.0007	0.0351	0.0313	60.9927	0.0075	0.50	1.87	3.47	4.19E-03	0.21	0.19	365.96	0.05
Dump truck	2	6	Off-Highway Trucks Composite	0.2241	0.6635	2.0158	0.0027	0.0715	0.0636	260.0826	0.0202	2.69	7.96	24.19	0.03	0.86	0.76	3,120.99	0.24
Forklift	1	6	Forklifts Composite	0.0585	0.2257	0.4330	0.0006	0.0231	0.0205	54.3958	0.0053	0.35	1.35	2.60	3.62E-03	0.14	0.12	326.37	0.03
Excavator	2	6	Excavators Composite	0.1300	0.5401	0.9817	0.0013	0.0536	0.0477	119.5809	0.0117	1.56	6.48	11.78	0.02	0.64	0.57	1,434.97	0.14
Crane	1	6	Cranes Composite	0.1425	0.4946	1.2753	0.0014	0.0553	0.0492	128.6448	0.0129	0.85	2.97	7.65	0.01	0.33	0.30	771.87	0.08
Trash pump	1	6	Pumps Composite	0.0813	0.2983	0.4999	0.0006	0.0351	0.0312	49.6067	0.0073	0.49	1.79	3.00	3.54E-03	0.21	0.19	297.64	0.04
Welder	1	6	Welders Composite	0.0703	0.2150	0.2702	0.0003	0.0243	0.0216	25.6027	0.0063	0.42	1.29	1.62	1.90E-03	0.15	0.13	153.62	0.04
Trucks	3	6	Off-Highway Trucks Composite	0.2241	0.6635	2.0158	0.0027	0.0715	0.0636	260.0826	0.0202	4.03	11.94	36.29	0.05	1.29	1.14	4,681.49	0.36
Water truck	1	6	Off-Highway Trucks Composite	0.2241	0.6635	2.0158	0.0027	0.0715	0.0636	260.0826	0.0202	1.34	3.98	12.10	0.02	0.43	0.38	1,560.50	0.12

Emissions from On Road Equipment

Y = (N)(D)(EF)

where,
Y = Daily emissions of criteria pollutant, lbs/day.
N = Number of trips per day.
D = Distance per trip, miles.
EF = Emission factor for criteria pollutant, lb/mile (EMFAC 2007 (v2.3) Emission Factors for On-Road Vehicles, SCAQMD).

				Emission factors (lbs/mile)										Emissions (lbs/day)											
Type	Year	Total daily round trips	Miles during trip	VOC	CO	NOx	SOx	PM10, tire and brake	PM10, exhaust	PM2.5, tire and brake	PM2.5, exhaust	CO2	CH4	VOC	CO	NOx	SOx	PM10, tire and brake	PM10, exhaust	Total PM10	PM2.5, tire and brake	PM2.5, exhaust	Total PM2.5	CO2	CH4
Worker trips	2012	5	20	0.000796	0.007655	0.000776	0.000011	0.000090		0.000057		1.101525	0.000072	0.08	0.77	0.08	1.07E-03	8.98E-03	0	8.98E-03	5.75E-03	0	5.75E-03	110.15	7.17E-03
Bentonite slurry hauling	2012	1	3	0.002528	0.010215	0.030924	0.000040	0.001496	0.001355	0.001294	0.001248	4.215908	0.000117	0.01	0.03	0.09	1.21E-04	4.49E-03	4.07E-03	8.55E-03	3.88E-03	3.75E-03	7.63E-03	12.65	3.50E-04
Material delivery	2012	10	40	0.002528	0.010215	0.030924	0.000040	0.001496	0.001355	0.001294	0.001248	4.215908	0.000117	1.01	4.09	12.37	0.02	0.60	0.54	1.14	0.52	0.50	1.02	1,686.36	0.05
Water hauling	2012	2	7	0.002528	0.010215	0.030924	0.000040	0.001496	0.001355	0.001294	0.001248	4.215908	0.000117	0.04	0.14	0.43	5.66E-04	0.02	0.02	0.04	0.02	0.02	0.04	59.02	1.63E-03
Soil hauling	2012	1	4	0.002528	0.010215	0.030924	0.000040	0.001496	0.001355	0.001294	0.001248	4.215908	0.000117	0.01	0.04	0.12	1.62E-04	5.98E-03	5.42E-03	0.01	5.17E-03	4.99E-03	0.01	16.86	4.66E-04

Indirect Emissions of Carbon Dioxide from the Manufacturing of Steel

Y = QFk

where,
Y = Daily emissions of carbon dioxide, lbs/day.
Q = Quantity of steel used, 0.37 tons/day .
F = Emission factor for carbon dioxide, 1.70 lb/lbs (International Iron and Steel Institute, 2005 Average Industry Carbon Dioxide Emissions).
k = Conversion factor, 2,000 lb/ton.

Y = (0.37 tons/day)(2000 lb/ton)(1.70 lb/lb) = 1,258 lbs/day

Jack and Bore at Reach I-B

Entrance Pit Excavation Activities

Emissions of Fugitive Dust (PM10) from Excavation

Y = (N)(EF)

where,
Y = Daily emissions of PM10 fugitive dust, lbs/day.
N = Number of acres disturbed per day during soil excavation, 0.0092 acres.
EF = Emission factor for PM10 fugitive dust during excavation, 10 lbs/acre-day (URBEMIS 2007, V9.2.4).

Y= (0.0092 acres)(10 lbs/acre-day) = 0.092 lbs/day

Emissions of Fugitive Dust (PM2.5) from Excavation

Y = (N)(EF)

where,
Y = Daily emissions of PM2.5 fugitive dust, lbs/day.
N = Number of acres disturbed per day during soil excavation, 0.0092 acres.
EF = Emission factor for PM2.5 fugitive dust during excavation, 2.1 lbs/acre-day (URBEMIS 2007, V9.2.4).

Y= (0.0092 acres)(2.1 lbs/acre-day) = 0.019 lbs/day

Emissions from Off Road Equipment

Y = (N)(H)(EF)

where,
Y = Daily emissions of criteria pollutant, lbs/day.
N = Number of pieces of equipment in a specified equipment category.
H = Hours per day of equipment operation.
EF = Emission factor for criteria pollutant, lb/hr (CEQA Air Quality Handbook (SCAQMD 1993) Table A9-8 Off-road Mobile Sources Emission Factors).

Equipment	Number	Hours	URBEMIS Designation	Emission factors, lb/hr								Emissions, lbs/day							
				VOC	CO	NOx	SOx	PM10	PM2.5	CO2	CH4	VOC	CO	NOx	SOx	PM10	PM2.5	CO2	CH4
Crane	1	6	Cranes Composite	0.1425	0.4946	1.2753	0.0014	0.0553	0.0492	128.6448	0.0129	0.85	2.97	7.65	8.26E-03	0.33	0.30	771.87	0.08
Excavator	1	6	Excavators Composite	0.1300	0.5401	0.9817	0.0013	0.0536	0.0477	119.5809	0.0117	0.78	3.24	5.89	7.89E-03	0.32	0.29	717.49	0.07

Emissions from On Road Equipment

Y = (N)(D)(EF)

where,
Y = Daily emissions of criteria pollutant, lbs/day.
N = Number of trips per day.
D = Distance per trip, miles.
EF = Emission factor for criteria pollutant, lb/mile (EMFAC 2007 (v2.3) Emission Factors for On-Road Vehicles, SCAQMD).

Type	Year	Total daily round trips	Miles during trip	Emission factors (lbs/mile)										Emissions (lbs/day)										
				VOC	CO	NOx	SOx	PM10, tire and brake	PM10, exhaust	PM2.5, tire and brake	PM2.5, exhaust	CO2	CH4	VOC	CO	NOx	SOx	PM10, tire and brake	PM10, exhaust	Total PM10	PM2.5, tire and brake	PM2.5, exhaust	Total PM2.5	CO2	CH4
Worker trips	2012	5	20	0.000796	0.007655	0.000776	0.000011	0.000090		0.000057		1.101525	0.000072	0.08	0.77	0.08	1.07E-03	8.98E-03	0	8.98E-03	5.75E-03	0	5.75E-03	110.15	7.17E-03

Exit Pit Excavation Activities

Emissions of Fugitive Dust (PM10) from Excavation

Y = (N)(EF)

where,
Y = Daily emissions of PM10 fugitive dust, lbs/day.
N = Number of acres disturbed per day during soil excavation, 0.0023 acres.
EF = Emission factor for PM10 fugitive dust during excavation, 10 lbs/acre-day (URBEMIS 2007, V9.2.4).

Y= (0.0023 acres)(10 lbs/acre-day) = 0.023 lbs/day

Emissions of Fugitive Dust (PM2.5) from Excavation

Y = (N)(EF)

where,
Y = Daily emissions of PM2.5 fugitive dust, lbs/day.
N = Number of acres disturbed per day during soil excavation, 0.0023 acres.
EF = Emission factor for PM2.5 fugitive dust during excavation, 2.1 lbs/acre-day (URBEMIS 2007, V9.2.4).

Y= (0.0023 acres)(2.1 lbs/acre-day) = 0.0048 lbs/day

Emissions from Off Road Equipment

Y = (N)(H)(EF)

where,
Y = Daily emissions of criteria pollutant, lbs/day.
N = Number of pieces of equipment in a specified equipment category.
H = Hours per day of equipment operation.
EF = Emission factor for criteria pollutant, lb/hr (CEQA Air Quality Handbook (SCAQMD 1993) Table A9-8 Off-road Mobile Sources Emission Factors).

				Emission factors, lb/hr								Emissions, lbs/day							
Equipment	Number	Hours	URBEMIS Designation	VOC	CO	NOx	SOx	PM10	PM2.5	CO2	CH4	VOC	CO	NOx	SOx	PM10	PM2.5	CO2	CH4
Crane	1	6	Cranes Composite	0.1425	0.4946	1.2753	0.0014	0.0553	0.0492	128.6448	0.0129	0.85	2.97	7.65	8.26E-03	0.33	0.30	771.87	0.08
Excavator	1	6	Excavators Composite	0.1300	0.5401	0.9817	0.0013	0.0536	0.0477	119.5809	0.0117	0.78	3.24	5.89	7.89E-03	0.32	0.29	717.49	0.07

Emissions from On Road Equipment

Y = (N)(D)(EF)

where,
Y = Daily emissions of criteria pollutant, lbs/day.
N = Number of trips per day.
D = Distance per trip, miles.
EF = Emission factor for criteria pollutant, lb/mile (EMFAC 2007 (v2.3) Emission Factors for On-Road Vehicles, SCAQMD).

				Emission factors (lbs/mile)										Emissions (lbs/day)											
Type	Year	Total daily round trips	Miles during trip	VOC	CO	NOx	SOx	PM10, tire and brake	PM10, exhaust	PM2.5, tire and brake	PM2.5, exhaust	CO2	CH4	VOC	CO	NOx	SOx	PM10, tire and brake	PM10, exhaust	Total PM10	PM2.5, tire and brake	PM2.5, exhaust	Total PM2.5	CO2	CH4
Worker trips	2012	5	20	0.000796	0.007655	0.000776	0.000011	0.000090		0.000057		1.101525	0.000072	0.08	0.77	0.08	1.07E-03	8.98E-03	0	8.98E-03	5.75E-03	0	5.75E-03	110.15	7.17E-03

Jack and Bore at Reach I-B Activities

Emissions of Fugitive Dust (PM10) from Excavation

Y = (N)(EF)

where,
Y = Daily emissions of PM10 fugitive dust, lbs/day.
N = Number of acres disturbed per day during soil excavation, 0.0015 acres.
EF = Emission factor for PM10 fugitive dust during excavation, 10 lbs/acre-day (URBEMIS 2007, V9.2.4).

Y= (0.0015 acres)(10 lbs/acre-day) = 0.015 lbs/day

Emissions of Fugitive Dust (PM2.5) from Excavation

Y = (N)(EF)

where,
Y = Daily emissions of PM2.5 fugitive dust, lbs/day.
N = Number of acres disturbed per day during soil excavation, 0.0015 acres.
EF = Emission factor for PM2.5 fugitive dust during excavation, 2.1 lbs/acre-day (URBEMIS 2007, V9.2.4).

Y= (0.0015 acres)(2.1 lbs/acre-day) = 0.0032 lbs/day

Emissions from Off Road Equipment

Y = (N)(H)(EF)

where,
Y = Daily emissions of criteria pollutant, lbs/day.
N = Number of pieces of equipment in a specified equipment category.
H = Hours per day of equipment operation.
EF = Emission factor for criteria pollutant, lb/hr (CEQA Air Quality Handbook (SCAQMD 1993) Table A9-8 Off-road Mobile Sources Emission Factors).

				Emission factors, lb/hr								Emissions, lbs/day							
Equipment	Number	Hours	URBEMIS Designation	VOC	CO	NOx	SOx	PM10	PM2.5	CO2	CH4	VOC	CO	NOx	SOx	PM10	PM2.5	CO2	CH4
Crane	1	6	Cranes Composite	0.1425	0.4946	1.2753	0.0014	0.0553	0.0492	128.6448	0.0129	0.85	2.97	7.65	8.26E-03	0.33	0.30	771.87	0.08
Excavator	1	24	Excavators Composite	0.1300	0.5401	0.9817	0.0013	0.0536	0.0477	119.5809	0.0117	3.12	12.96	23.56	0.03	1.29	1.14	2,869.94	0.28
Backhoe	1	24	Tractors/Loaders/Backhoes Composite	0.0862	0.3824	0.5816	0.0008	0.0435	0.0387	66.8029	0.0078	2.07	9.18	13.96	0.02	1.04	0.93	1,603.27	0.19
Jacking machine	1	24	Bore/Drill Rigs Composite	0.0854	0.5068	0.9013	0.0017	0.0367	0.0327	164.9593	0.0077	2.05	12.16	21.63	0.04	0.88	0.78	3,959.02	0.19

Emissions from On Road Equipment

Y = (N)(D)(EF)

where,
Y = Daily emissions of criteria pollutant, lbs/day.
N = Number of trips per day.
D = Distance per trip, miles.
EF = Emission factor for criteria pollutant, lb/mile (EMFAC 2007 (v2.3) Emission Factors for On-Road Vehicles, SCAQMD).

				Emission factors (lbs/mile)										Emissions (lbs/day)											
Type	Year	Total daily round trips	Miles during trip	VOC	CO	NOx	SOx	PM10, tire and brake	PM10, exhaust	PM2.5, tire and brake	PM2.5, exhaust	CO2	CH4	VOC	CO	NOx	SOx	PM10, tire and brake	PM10, exhaust	Total PM10	PM2.5, tire and brake	PM2.5, exhaust	Total PM2.5	CO2	CH4
Worker trips	2012	5	20	0.000796	0.007655	0.000776	0.000011	0.000090		0.000057		1.101525	0.000072	0.08	0.77	0.08	1.07E-03	8.98E-03	0	8.98E-03	5.75E-03	0	5.75E-03	110.15	7.17E-03
Material delivery	2012	1	40	0.002528	0.010215	0.030924	0.000040	0.001496	0.001355	0.001294	0.001248	4.215908	0.000117	0.10	0.41	1.24	1.62E-03	5.98E-02	5.42E-02	1.14E-01	5.17E-02	4.99E-02	1.02E-01	168.64	4.66E-03
Soil hauling	2012	1	3.5	0.002528	0.010215	0.030924	0.000040	0.001496	0.001355	0.001294	0.001248	4.215908	0.000117	8.85E-03	0.04	0.11	1.41E-04	5.23E-03	4.74E-03	9.98E-03	4.53E-03	4.37E-03	8.90E-03	14.76	4.08E-04

Indirect Emissions of Carbon Dioxide from the Manufacturing of Steel

Y = QFk

where,
Y = Daily emissions of carbon dioxide, lbs/day.
Q = Quantity of steel used, 0.15 tons/day .
F = Emission factor for carbon dioxide, 1.70 lb/lbs (International Iron and Steel Institute, 2005 Average Industry Carbon Dioxide Emissions).
k = Conversion factor, 2,000 lb/ton.

Y = (0.15 tons/day)(2000 lb/ton)(1.70 lb/lb) = 510 lbs/day

Jack and Bore at Reach I-V

Entrance Pit Excavation Activities

Emissions of Fugitive Dust (PM10) from Excavation

Y = (N)(EF)

where,
Y = Daily emissions of PM10 fugitive dust, lbs/day.
N = Number of acres disturbed per day during soil excavation, 0.0092 acres.
EF = Emission factor for PM10 fugitive dust during excavation, 10 lbs/acre-day (URBEMIS 2007, V9.2.4).

Y= (0.0092 acres)(10 lbs/acre-day) = 0.092 lbs/day

Emissions of Fugitive Dust (PM2.5) from Excavation

Y = (N)(EF)

where,
Y = Daily emissions of PM2.5 fugitive dust, lbs/day.
N = Number of acres disturbed per day during soil excavation, 0.0092 acres.
EF = Emission factor for PM2.5 fugitive dust during excavation, 2.1 lbs/acre-day (URBEMIS 2007, V9.2.4).

Y= (0.0092 acres)(2.1 lbs/acre-day) = 0.019 lbs/day

Emissions from Off Road Equipment

Y = (N)(H)(EF)

where,
Y = Daily emissions of criteria pollutant, lbs/day.
N = Number of pieces of equipment in a specified equipment category.
H = Hours per day of equipment operation.
EF = Emission factor for criteria pollutant, lb/hr (CEQA Air Quality Handbook (SCAQMD 1993) Table A9-8 Off-road Mobile Sources Emission Factors).

Equipment	Number	Hours	URBEMIS Designation	Emission factors, lb/hr								Emissions, lbs/day							
				VOC	CO	NOx	SOx	PM10	PM2.5	CO2	CH4	VOC	CO	NOx	SOx	PM10	PM2.5	CO2	CH4
Crane	1	6	Cranes Composite	0.1425	0.4946	1.2753	0.0014	0.0553	0.0492	128.6448	0.0129	0.85	2.97	7.65	8.26E-03	0.33	0.30	771.87	0.08
Excavator	1	6	Excavators Composite	0.1300	0.5401	0.9817	0.0013	0.0536	0.0477	119.5809	0.0117	0.78	3.24	5.89	7.89E-03	0.32	0.29	717.49	0.07

Emissions from On Road Equipment

Y = (N)(D)(EF)

where,
Y = Daily emissions of criteria pollutant, lbs/day.
N = Number of trips per day.
D = Distance per trip, miles.
EF = Emission factor for criteria pollutant, lb/mile (EMFAC 2007 (v2.3) Emission Factors for On-Road Vehicles, SCAQMD).

Type	Year	Total daily round trips	Miles during trip	Emission factors (lbs/mile)										Emissions (lbs/day)										
				VOC	CO	NOx	SOx	PM10, tire and brake	PM10, exhaust	PM2.5, tire and brake	PM2.5, exhaust	CO2	CH4	VOC	CO	NOx	SOx	PM10, tire and brake	PM10, exhaust	Total PM10	PM2.5, tire and brake	PM2.5, exhaust	Total PM2.5	CO2	CH4
Worker trips	2012	5	20	0.000796	0.007655	0.000776	0.000011	0.000090		0.000057		1.101525	0.000072	0.08	0.77	0.08	1.07E-03	8.98E-03	0	8.98E-03	5.75E-03	0	5.75E-03	110.15	7.17E-03

Exit Pit Excavation Activities

Emissions of Fugitive Dust (PM10) from Excavation

Y = (N)(EF)

where,
Y = Daily emissions of PM10 fugitive dust, lbs/day.
N = Number of acres disturbed per day during soil excavation, 0.0023 acres.
EF = Emission factor for PM10 fugitive dust during excavation, 10 lbs/acre-day (URBEMIS 2007, V9.2.4).

Y= (0.0023 acres)(10 lbs/acre-day) = 0.023 lbs/day

Emissions of Fugitive Dust (PM2.5) from Excavation

Y = (N)(EF)

where,
Y = Daily emissions of PM2.5 fugitive dust, lbs/day.
N = Number of acres disturbed per day during soil excavation, 0.0023 acres.
EF = Emission factor for PM2.5 fugitive dust during excavation, 2.1 lbs/acre-day (URBEMIS 2007, V9.2.4).

Y= (0.0023 acres)(2.1 lbs/acre-day) = 0.0048 lbs/day

Emissions from Off Road Equipment

Y = (N)(H)(EF)

where,
Y = Daily emissions of criteria pollutant, lbs/day.
N = Number of pieces of equipment in a specified equipment category.
H = Hours per day of equipment operation.
EF = Emission factor for criteria pollutant, lb/hr (CEQA Air Quality Handbook (SCAQMD 1993) Table A9-8 Off-road Mobile Sources Emission Factors).

Equipment	Number	Hours	URBEMIS Designation	Emission factors, lb/hr								Emissions, lbs/day							
				VOC	CO	NOx	SOx	PM10	PM2.5	CO2	CH4	VOC	CO	NOx	SOx	PM10	PM2.5	CO2	CH4
Crane	1	6	Cranes Composite	0.1425	0.4946	1.2753	0.0014	0.0553	0.0492	128.6448	0.0129	0.85	2.97	7.65	8.26E-03	0.33	0.30	771.87	0.08
Excavator	1	6	Excavators Composite	0.1300	0.5401	0.9817	0.0013	0.0536	0.0477	119.5809	0.0117	0.78	3.24	5.89	7.89E-03	0.32	0.29	717.49	0.07

Emissions from On Road Equipment

Y = (N)(D)(EF)

where,
Y = Daily emissions of criteria pollutant, lbs/day.
N = Number of trips per day.
D = Distance per trip, miles.
EF = Emission factor for criteria pollutant, lb/mile (EMFAC 2007 (v2.3) Emission Factors for On-Road Vehicles, SCAQMD).

				Emission factors (lbs/mile)										Emissions (lbs/day)										
Type	Year	Total daily round trips	Miles during trip	VOC	CO	NOx	SOx	PM10, tire and brake	PM10, exhaust	PM2.5, tire and brake	PM2.5, exhaust	CO2	CH4	VOC	CO	NOx	SOx	PM10, tire and brake	PM10, exhaust	Total PM10	PM2.5, tire and brake	PM2.5, exhaust	Total PM2.5	CO2	CH4
Worker trips	2012	5	20	0.000796	0.007655	0.000776	0.000011	0.000090		0.000057		1.101525	0.000072	0.08	0.77	0.08	1.07E-03	8.98E-03	0	8.98E-03	5.75E-03	0	5.75E-03	110.15	7.17E-03

Jack and Bore at Reach I-V Activities

Emissions of Fugitive Dust (PM10) from Excavation

Y = (N)(EF)

where,
Y = Daily emissions of PM10 fugitive dust, lbs/day.
N = Number of acres disturbed per day during soil excavation, 0.0014 acres.
EF = Emission factor for PM10 fugitive dust during excavation, 10 lbs/acre-day (URBEMIS 2007, V9.2.4).

Y= (0.0014 acres)(10 lbs/acre-day) = 0.014 lbs/day

Emissions of Fugitive Dust (PM2.5) from Excavation

Y = (N)(EF)

where,
Y = Daily emissions of PM2.5 fugitive dust, lbs/day.
N = Number of acres disturbed per day during soil excavation, 0.0014 acres.
EF = Emission factor for PM2.5 fugitive dust during excavation, 2.1 lbs/acre-day (URBEMIS 2007, V9.2.4).

Y= (0.0014 acres)(2.1 lbs/acre-day) = 0.0029 lbs/day

Emissions from Off Road Equipment

Y = (N)(H)(EF)

where,
Y = Daily emissions of criteria pollutant, lbs/day.
N = Number of pieces of equipment in a specified equipment category.
H = Hours per day of equipment operation.
EF = Emission factor for criteria pollutant, lb/hr (CEQA Air Quality Handbook (SCAQMD 1993) Table A9-8 Off-road Mobile Sources Emission Factors).

				Emission factors, lb/hr								Emissions, lbs/day							
Equipment	Number	Hours	URBEMIS Designation	VOC	CO	NOx	SOx	PM10	PM2.5	CO2	CH4	VOC	CO	NOx	SOx	PM10	PM2.5	CO2	CH4
Crane	1	6	Cranes Composite	0.1425	0.4946	1.2753	0.0014	0.0553	0.0492	128.6448	0.0129	0.85	2.97	7.65	8.26E-03	0.33	0.30	771.87	0.08
Excavator	1	24	Excavators Composite	0.1300	0.5401	0.9817	0.0013	0.0536	0.0477	119.5809	0.0117	3.12	12.96	23.56	0.03	1.29	1.14	2,869.94	0.28
Backhoe	1	24	Tractors/Loaders/Backhoes Composite	0.0862	0.3824	0.5816	0.0008	0.0435	0.0387	66.8029	0.0078	2.07	9.18	13.96	0.02	1.04	0.93	1,603.27	0.19
Jacking machine	1	24	Bore/Drill Rigs Composite	0.0854	0.5068	0.9013	0.0017	0.0367	0.0327	164.9593	0.0077	2.05	12.16	21.63	0.04	0.88	0.78	3,959.02	0.19

Emissions from On Road Equipment

Y = (N)(D)(EF)

where,
Y = Daily emissions of criteria pollutant, lbs/day.
N = Number of trips per day.
D = Distance per trip, miles.
EF = Emission factor for criteria pollutant, lb/mile (EMFAC 2007 (v2.3) Emission Factors for On-Road Vehicles, SCAQMD).

				Emission factors (lbs/mile)										Emissions (lbs/day)											
Type	Year	Total daily round trips	Miles during trip	VOC	CO	NOx	SOx	PM10, tire and brake	PM10, exhaust	PM2.5, tire and brake	PM2.5, exhaust	CO2	CH4	VOC	CO	NOx	SOx	PM10, tire and brake	PM10, exhaust	Total PM10	PM2.5, tire and brake	PM2.5, exhaust	Total PM2.5	CO2	CH4
Worker trips	2012	5	20	0.000796	0.007655	0.000776	0.000011	0.000090		0.000057		1.101525	0.000072	0.08	0.77	0.08	1.07E-03	8.98E-03	0	8.98E-03	5.75E-03	0	5.75E-03	110.15	7.17E-03
Material delivery	2012	1	40	0.002528	0.010215	0.030924	0.000040	0.001496	0.001355	0.001294	0.001248	4.215908	0.000117	0.10	0.41	1.24	1.62E-03	5.98E-02	5.42E-02	1.14E-01	5.17E-02	4.99E-02	1.02E-01	168.64	4.66E-03
Soil hauling	2012	1	2.2	0.002528	0.010215	0.030924	0.000040	0.001496	0.001355	0.001294	0.001248	4.215908	0.000117	5.56E-03	0.02	0.07	8.89E-05	3.29E-03	2.98E-03	6.27E-03	2.85E-03	4.99E-02	5.28E-02	168.64	4.66E-03

Indirect Emissions of Carbon Dioxide from the Manufacturing of Steel

Y = QFk

where,
Y = Daily emissions of carbon dioxide, lbs/day.
Q = Quantity of steel used, 0.14 tons/day .
F = Emission factor for carbon dioxide, 1.70 lb/lbs (International Iron and Steel Institute, 2005 Average Industry Carbon Dioxide Emissions).
k = Conversion factor, 2,000 lb/ton.

Y = (0.14 tons/day)(2000 lb/ton)(1.70 lb/lb)= 476 lbs/day

Tunneling at Reach II

Entrance Pit Excavation Activities

Emissions of Fugitive Dust (PM10) from Excavation

Y = (N)(EF)

where,
Y = Daily emissions of PM10 fugitive dust, lbs/day.
N = Number of acres disturbed per day during soil excavation, 0.0092 acres.
EF = Emission factor for PM10 fugitive dust during excavation, 10 lbs/acre-day (URBEMIS 2007, V9.2.4).

Y= (0.0092 acres)(10 lbs/acre-day) = 0.092 lbs/day

Emissions of Fugitive Dust (PM2.5) from Excavation

Y = (N)(EF)

where,
Y = Daily emissions of PM2.5 fugitive dust, lbs/day.
N = Number of acres disturbed per day during soil excavation, 0.0092 acres.
EF = Emission factor for PM2.5 fugitive dust during excavation, 2.1 lbs/acre-day (URBEMIS 2007, V9.2.4).

Y= (0.0092 acres)(2.1 lbs/acre-day) = 0.019 lbs/day

Emissions from Off Road Equipment

Y = (N)(H)(EF)

where,
Y = Daily emissions of criteria pollutant, lbs/day.
N = Number of pieces of equipment in a specified equipment category.
H = Hours per day of equipment operation.
EF = Emission factor for criteria pollutant, lb/hr (CEQA Air Quality Handbook (SCAQMD 1993) Table A9-8 Off-road Mobile Sources Emission Factors).

Equipment	Number	Hours	URBEMIS Designation	Emission factors, lb/hr								Emissions, lbs/day							
				VOC	CO	NOx	SOx	PM10	PM2.5	CO2	CH4	VOC	CO	NOx	SOx	PM10	PM2.5	CO2	CH4
Crane	1	6	Cranes Composite	0.1425	0.4946	1.2753	0.0014	0.0553	0.0492	128.6448	0.0129	0.85	2.97	7.65	8.26E-03	0.33	0.30	771.87	0.08
Excavator	1	6	Excavators Composite	0.1300	0.5401	0.9817	0.0013	0.0536	0.0477	119.5809	0.0117	0.78	3.24	5.89	7.89E-03	0.32	0.29	717.49	0.07
Backhoe	1	6	Tractors/Loaders/Backhoes Composite	0.0862	0.3824	0.5816	0.0008	0.0435	0.0387	66.8029	0.0078	0.52	2.29	3.49	4.65E-03	0.26	0.23	400.82	0.05

Emissions from On Road Equipment

Y = (N)(D)(EF)

where,
Y = Daily emissions of criteria pollutant, lbs/day.
N = Number of trips per day.
D = Distance per trip, miles.
EF = Emission factor for criteria pollutant, lb/mile (EMFAC 2007 (v2.3) Emission Factors for On-Road Vehicles, SCAQMD).

Type	Year	Total daily round trips	Miles during trip	Emission factors (lbs/mile)										Emissions (lbs/day)											
				VOC	CO	NOx	SOx	PM10, tire and brake	PM10, exhaust	PM2.5, tire and brake	PM2.5, exhaust	CO2	CH4	VOC	CO	NOx	SOx	PM10, tire and brake	PM10, exhaust	Total PM10	PM2.5, tire and brake	PM2.5, exhaust	Total PM2.5	CO2	CH4
Worker trips	2012	5	20	0.000796	0.007655	0.000776	0.000011	0.000090		0.000057		1.101525	0.000072	0.08	0.77	0.08	1.07E-03	8.98E-03	0	8.98E-03	5.75E-03	0	5.75E-03	110.15	7.17E-03
Soil hauling	2012	1	2.2	0.002528	0.010215	0.030924	0.000040	0.001496	0.001355	0.001294	0.001248	4.215908	0.000117	5.56E-03	2.25E-02	6.80E-02	8.89E-05	3.29E-03	2.98E-03	6.27E-03	2.85E-03	2.75E-03	5.59E-03	9.27	2.56E-04

Exit Pit Excavation Activities

Emissions of Fugitive Dust (PM10) from Excavation

Y = (N)(EF)

where,
Y = Daily emissions of PM10 fugitive dust, lbs/day.
N = Number of acres disturbed per day during soil excavation, 0.0023 acres.
EF = Emission factor for PM10 fugitive dust during excavation, 10 lbs/acre-day (URBEMIS 2007, V9.2.4).

Y= (0.0023 acres)(10 lbs/acre-day) = 0.023 lbs/day

Emissions of Fugitive Dust (PM2.5) from Excavation

Y = (N)(EF)

where,
Y = Daily emissions of PM2.5 fugitive dust, lbs/day.
N = Number of acres disturbed per day during soil excavation, 0.0023 acres.
EF = Emission factor for PM2.5 fugitive dust during excavation, 2.1 lbs/acre-day (URBEMIS 2007, V9.2.4).

Y= (0.0023 acres)(2.1 lbs/acre-day) = 0.0048 lbs/day

Emissions from Off Road Equipment

Y = (N)(H)(EF)

where,
Y = Daily emissions of criteria pollutant, lbs/day.
N = Number of pieces of equipment in a specified equipment category.
H = Hours per day of equipment operation.
EF = Emission factor for criteria pollutant, lb/hr (CEQA Air Quality Handbook (SCAQMD 1993) Table A9-8 Off-road Mobile Sources Emission Factors).

				Emission factors, lb/hr								Emissions, lbs/day							
Equipment	Number	Hours	URBEMIS Designation	VOC	CO	NOx	SOx	PM10	PM2.5	CO2	CH4	VOC	CO	NOx	SOx	PM10	PM2.5	CO2	CH4
Crane	1	6	Cranes Composite	0.1425	0.4946	1.2753	0.0014	0.0553	0.0492	128.6448	0.0129	0.85	2.97	7.65	8.26E-03	0.33	0.30	771.87	0.08
Excavator	1	6	Excavators Composite	0.1300	0.5401	0.9817	0.0013	0.0536	0.0477	119.5809	0.0117	0.78	3.24	5.89	7.89E-03	0.32	0.29	717.49	0.07
Backhoe	1	6	Tractors/Loaders/Backhoes Composite	0.0862	0.3824	0.5816	0.0008	0.0435	0.0387	66.8029	0.0078	0.52	2.29	3.49	4.65E-03	0.26	0.23	400.82	0.05

Emissions from On Road Equipment

Y = (N)(D)(EF)

where,
Y = Daily emissions of criteria pollutant, lbs/day.
N = Number of trips per day.
D = Distance per trip, miles.
EF = Emission factor for criteria pollutant, lb/mile (EMFAC 2007 (v2.3) Emission Factors for On-Road Vehicles, SCAQMD).

				Emission factors (lbs/mile)										Emissions (lbs/day)											
Type	Year	Total daily round trips	Miles during trip	VOC	CO	NOx	SOx	PM10, tire and brake	PM10, exhaust	PM2.5, tire and brake	PM2.5, exhaust	CO2	CH4	VOC	CO	NOx	SOx	PM10, tire and brake	PM10, exhaust	Total PM10	PM2.5, tire and brake	PM2.5, exhaust	Total PM2.5	CO2	CH4
Worker trips	2012	5	20	0.000796	0.007655	0.000776	0.000011	0.000090		0.000057		1.101525	0.000072	0.08	0.77	0.08	1.07E-03	8.98E-03	0	8.98E-03	5.75E-03	0	5.75E-03	110.15	7.17E-03
Soil hauling	2012	1	2.2	0.000796	0.007655	0.000776	0.000011	0.000090		0.000057		1.101525	0.000072	1.75E-03	0.02	1.71E-03	2.36E-05	1.98E-04	0	1.98E-04	1.26E-04	0	1.26E-04	2.42	1.58E-04

Tunneling at Reach II Activities

Emissions of Fugitive Dust (PM10) from Excavation

Y = (N)(EF)

where,
Y = Daily emissions of PM10 fugitive dust, lbs/day.
N = Number of acres disturbed per day during soil excavation, 0.011 acres.
EF = Emission factor for PM10 fugitive dust during excavation, 10 lbs/acre-day (URBEMIS 2007, V9.2.4).

Y= (0.011 acres)(10 lbs/acre-day) = 0.11 lbs/day

Emissions of Fugitive Dust (PM2.5) from Excavation

Y = (N)(EF)

where,
Y = Daily emissions of PM2.5 fugitive dust, lbs/day.
N = Number of acres disturbed per day during soil excavation, 0.011 acres.
EF = Emission factor for PM2.5 fugitive dust during excavation, 2.1 lbs/acre-day (URBEMIS 2007, V9.2.4).

Y= (0.011 acres)(2.1 lbs/acre-day) = 0.002 lbs/day

Emissions from Off Road Equipment

Y = (N)(H)(EF)

where,
Y = Daily emissions of criteria pollutant, lbs/day.
N = Number of pieces of equipment in a specified equipment category.
H = Hours per day of equipment operation.
EF = Emission factor for criteria pollutant, lb/hr (CEQA Air Quality Handbook (SCAQMD 1993) Table A9-8 Off-road Mobile Sources Emission Factors).

				Emission factors, lb/hr								Emissions, lbs/day							
Equipment	Number	Hours	URBEMIS Designation	VOC	CO	NOx	SOx	PM10	PM2.5	CO2	CH4	VOC	CO	NOx	SOx	PM10	PM2.5	CO2	CH4
Tunneling boring machine	1	24	Bore/Drill Rigs Composite	0.0854	0.5068	0.9013	0.0017	0.0367	0.0327	164.9593	0.0077	2.05	12.16	21.63	0.04	0.88	0.78	3,959.02	0.19

Emissions from On Road Equipment

Y = (N)(D)(EF)

where,
Y = Daily emissions of criteria pollutant, lbs/day.
N = Number of trips per day.
D = Distance per trip, miles.
EF = Emission factor for criteria pollutant, lb/mile (EMFAC 2007 (v2.3) Emission Factors for On-Road Vehicles, SCAQMD).

				Emission factors (lbs/mile)										Emissions (lbs/day)										
Type	Year	Total daily round trips	Miles during trip	VOC	CO	NOx	SOx	PM10, tire and brake	PM10, exhaust	PM2.5, tire and brake	PM2.5, exhaust	CO2	CH4	VOC	CO	NOx	SOx	PM10, tire and brake	PM10, exhaust	Total PM10	PM2.5, tire and brake	PM2.5, exhaust	Total PM2.5	CO2	CH4
Worker trips	2012	5	20	0.000796	0.007655	0.000776	0.000011	0.000090		0.000057		1.101525	0.000072	0.08	0.77	0.08	1.07E-03	8.98E-03	0	8.98E-03	5.75E-03	0	5.75E-03	110.15	7.17E-03
Soil hauling	2012	7	2.2	0.002528	0.010215	0.030924	0.000040	0.001496	0.001355	0.001294	0.001248	4.215908	0.000117	3.89E-02	0.16	0.48	6.23E-04	2.30E-02	2.09E-02	4.39E-02	1.99E-02	1.92E-02	3.91E-02	64.92	1.79E-03

Pipe Installation at Tunneling Reach II Activities

Emissions from Off Road Equipment

Y = (N)(H)(EF)

where,
Y = Daily emissions of criteria pollutant, lbs/day.
N = Number of pieces of equipment in a specified equipment category.
H = Hours per day of equipment operation.
EF = Emission factor for criteria pollutant, lb/hr (CEQA Air Quality Handbook (SCAQMD 1993) Table A9-8 Off-road Mobile Sources Emission Factors).

				Emission factors, lb/hr								Emissions, lbs/day							
Equipment	Number	Hours	URBEMIS Designation	VOC	CO	NOx	SOx	PM10	PM2.5	CO2	CH4	VOC	CO	NOx	SOx	PM10	PM2.5	CO2	CH4
Crane	1	6	Cranes Composite	0.1425	0.4946	1.2753	0.0014	0.0553	0.0492	128.6448	0.0129	0.85	2.97	7.65	0.01	0.33	0.30	771.87	0.08
Pipe fusion machine	1	6	Other General Industrial Equipmen Composite	0.1635	0.5362	1.4520	0.0016	0.0632	0.0563	152.2399	0.0148	0.98	3.22	8.71	0.01	0.38	0.34	913.44	0.09
Loader	1	6	Tractors/Loaders/Backhoes Composite	0.0862	0.3824	0.5816	0.0008	0.0435	0.0387	66.8029	0.0078	0.52	2.29	3.49	4.65E-03	0.26	0.23	400.82	0.05
Backhoe	1	6	Tractors/Loaders/Backhoes Composite	0.0862	0.3824	0.5816	0.0008	0.0435	0.0387	66.8029	0.0078	0.52	2.29	3.49	4.65E-03	0.26	0.23	400.82	0.05
Dump truck	1	6	Off-Highway Trucks Composite	0.2241	0.6635	2.0158	0.0027	0.0715	0.0636	260.0826	0.0202	1.34	3.98	12.10	0.02	0.43	0.38	1,560.50	0.12

Emissions from On Road Equipment

Y = (N)(D)(EF)

where,
Y = Daily emissions of criteria pollutant, lbs/day.
N = Number of trips per day.
D = Distance per trip, miles.
EF = Emission factor for criteria pollutant, lb/mile (EMFAC 2007 (v2.3) Emission Factors for On-Road Vehicles, SCAQMD).

				Emission factors (lbs/mile)										Emissions (lbs/day)											
Type	Year	Total daily round trips	Miles during trip	VOC	CO	NOx	SOx	PM10, tire and brake	PM10, exhaust	PM2.5, tire and brake	PM2.5, exhaust	CO2	CH4	VOC	CO	NOx	SOx	PM10, tire and brake	PM10, exhaust	Total PM10	PM2.5, tire and brake	PM2.5, exhaust	Total PM2.5	CO2	CH4
Worker trips	2012	5	20	0.000796	0.007655	0.000776	0.000011	0.000090		0.000057		1.101525	0.000072	0.08	0.77	0.08	1.07E-03	8.98E-03	0	8.98E-03	5.75E-03	0	5.75E-03	110.15	0.01
Material delivery	2012	100	40	0.002528	0.010215	0.030924	0.000040	0.001496	0.001355	0.001294	0.001248	4.215908	0.000117	10.11	40.86	123.70	0.16	5.98	5.42	11.40	5.17	4.99	10.17	16,863.63	0.47

Indirect Emissions of Carbon Dioxide from the Manufacturing of Steel

Y = QFk

where,
Y = Daily emissions of carbon dioxide, lbs/day.
Q = Quantity of steel used, 0.67 tons/day .
F = Emission factor for carbon dioxide, 1.70 lb/lbs (International Iron and Steel Institute, 2005 Average Industry Carbon Dioxide Emissions).
k = Conversion factor, 2,000 lb/ton.

Y = (0.67 tons/day)(2000 lb/ton)(1.70 lb/lb)= 2,278 lbs/day

Deep Open Trenching at Reach III

Trenching Activities

Emissions of Fugitive Dust (PM10) from Excavation

Y = (N)(EF)

where,
Y = Daily emissions of PM10 fugitive dust, lbs/day.
N = Number of acres disturbed per day during soil excavation, 0.004 acres.
EF = Emission factor for PM10 fugitive dust during excavation, 10 lbs/acre-day (URBEMIS 2007, V9.2.4).

Y= (0.004 acres)(10 lbs/acre-day) = 0.041 lbs/day

Emissions of Fugitive Dust (PM2.5) from Excavation

Y = (N)(EF)

where,
Y = Daily emissions of PM2.5 fugitive dust, lbs/day.
N = Number of acres disturbed per day during soil excavation, 0.004 acres.
EF = Emission factor for PM2.5 fugitive dust during excavation, 2.1 lbs/acre-day (URBEMIS 2007, V9.2.4).

Y= (0.004 acres)(2.1 lbs/acre-day) = 0.009 lbs/day

Emissions from Off Road Equipment

Y = (N)(H)(EF)

where,
Y = Daily emissions of criteria pollutant, lbs/day.
N = Number of pieces of equipment in a specified equipment category.
H = Hours per day of equipment operation.
EF = Emission factor for criteria pollutant, lb/hr (CEQA Air Quality Handbook (SCAQMD 1993) Table A9-8 Off-road Mobile Sources Emission Factors).

				Emission factors, lb/hr								Emissions, lbs/day							
Equipment	Number	Hours	URBEMIS Designation	VOC	CO	NOx	SOx	PM10	PM2.5	CO2	CH4	VOC	CO	NOx	SOx	PM10	PM2.5	CO2	CH4
Dump truck	1	6	Off-Highway Trucks Composite	0.2241	0.6635	2.0158	0.0027	0.0715	0.0636	260.0826	0.0202	1.34	3.98	12.10	1.60E-02	0.43	0.38	1,560.50	0.12
Drill rig	1	6	Bore/Drill Rigs Composite	0.0854	0.5068	0.9013	0.0017	0.0367	0.0327	164.9593	0.0077	0.51	3.04	5.41	1.05E-02	0.22	0.20	989.76	0.05
Loader	1	6	Tractors/Loaders/Backhoes Composite	0.0862	0.3824	0.5816	0.0008	0.0435	0.0387	66.8029	0.0078	0.52	2.29	3.49	4.65E-03	0.26	0.23	400.82	0.05
Excavator	1	6	Excavators Composite	0.1300	0.5401	0.9817	0.0013	0.0536	0.0477	119.5809	0.0117	0.78	3.24	5.89	7.89E-03	0.32	0.29	717.49	0.07
Backhoe	1	6	Tractors/Loaders/Backhoes Composite	0.0862	0.3824	0.5816	0.0008	0.0435	0.0387	66.8029	0.0078	0.52	2.29	3.49	4.65E-03	0.26	0.23	400.82	0.05

Emissions from On Road Equipment

Y = (N)(D)(EF)

where,
Y = Daily emissions of criteria pollutant, lbs/day.
N = Number of trips per day.
D = Distance per trip, miles.
EF = Emission factor for criteria pollutant, lb/mile (EMFAC 2007 (v2.3) Emission Factors for On-Road Vehicles, SCAQMD).

				Emission factors (lbs/mile)										Emissions (lbs/day)											
Type	Year	Total daily round trips	Miles during trip	VOC	CO	NOx	SOx	PM10, tire and brake	PM10, exhaust	PM2.5, tire and brake	PM2.5, exhaust	CO2	CH4	VOC	CO	NOx	SOx	PM10, tire and brake	PM10, exhaust	Total PM10	PM2.5, tire and brake	PM2.5, exhaust	Total PM2.5	CO2	CH4
Worker trips	2012	6	20	0.000796	0.007655	0.000776	0.000011	0.000090		0.000057		1.101525	0.000072	0.10	0.92	0.09	1.29E-03	1.08E-02	0	1.08E-02	6.90E-03	0	6.90E-03	132.18	8.60E-03
Soil hauling	2012	1	2.2	0.002528	0.010215	0.030924	0.000040	0.001496	0.001355	0.001294	0.001248	4.215908	0.000117	5.56E-03	2.25E-02	6.80E-02	8.89E-05	3.29E-03	2.98E-03	6.27E-03	2.85E-03	2.75E-03	5.59E-03	9.27	2.56E-04

Indirect Emissions of Carbon Dioxide from the Manufacturing of Steel

Y = QFk

where,
Y = Daily emissions of carbon dioxide, lbs/day.
Q = Quantity of steel used, 0.35 tons/day.
F = Emission factor for carbon dioxide, 1.70 lb/lbs (International Iron and Steel Institute, 2005 Average Industry Carbon Dioxide Emissions).
k = Conversion factor, 2,000 lb/ton.

Y = (0.35 tons/day)(2000 lb/ton)(1.70 lb/lb) = 1,190 lbs/day

Emissions of VOC from Paving

Y = (N)(EF)

where,
Y = Daily emissions of VOC, lbs/day.
N = Number of acres paved per day, 0.004 acres.
EF = Emission factor for VOC during paving, 2.62 lbs/acre (URBEMIS 2007, V9.2.4).

Y= (0.004 acres)(2.62 lbs/acre) = 0.011 lbs/day

Deep Open Trenching at Reach V

Trenching Activities

Emissions of Fugitive Dust (PM10) from Excavation

Y = (N)(EF)

where,
Y = Daily emissions of PM10 fugitive dust, lbs/day.
N = Number of acres disturbed per day during soil excavation, 0.0004 acres.
EF = Emission factor for PM10 fugitive dust during excavation, 10 lbs/acre-day (URBEMIS 2007, V9.2.4).

Y= (0.0004 acres)(10 lbs/acre-day) = 0.004 lbs/day

Emissions of Fugitive Dust (PM2.5) from Excavation

Y = (N)(EF)

where,
Y = Daily emissions of PM2.5 fugitive dust, lbs/day.
N = Number of acres disturbed per day during soil excavation, 0.0004 acres.
EF = Emission factor for PM2.5 fugitive dust during excavation, 2.1 lbs/acre-day (URBEMIS 2007, V9.2.4).

Y= (0.0004 acres)(2.1 lbs/acre-day) = 0.0008 lbs/day

Emissions from Off Road Equipment

Y = (N)(H)(EF)

where,
Y = Daily emissions of criteria pollutant, lbs/day.
N = Number of pieces of equipment in a specified equipment category.
H = Hours per day of equipment operation.
EF = Emission factor for criteria pollutant, lb/hr (CEQA Air Quality Handbook (SCAQMD 1993) Table A9-8 Off-road Mobile Sources Emission Factors).

				Emission factors, lb/hr								Emissions, lbs/day							
Equipment	Number	Hours	URBEMIS Designation	VOC	CO	NOx	SOx	PM10	PM2.5	CO2	CH4	VOC	CO	NOx	SOx	PM10	PM2.5	CO2	CH4
Dump truck	1	6	Off-Highway Trucks Composite	0.2241	0.6635	2.0158	0.0027	0.0715	0.0636	260.0826	0.0202	1.34	3.98	12.10	1.60E-02	0.43	0.38	1,560.50	0.12
Drill rig	1	6	Bore/Drill Rigs Composite	0.0854	0.5068	0.9013	0.0017	0.0367	0.0327	164.9593	0.0077	0.51	3.04	5.41	1.05E-02	0.22	0.20	989.76	0.05
Loader	1	6	Tractors/Loaders/Backhoes Composite	0.0862	0.3824	0.5816	0.0008	0.0435	0.0387	66.8029	0.0078	0.52	2.29	3.49	4.65E-03	0.26	0.23	400.82	0.05
Excavator	1	6	Excavators Composite	0.1300	0.5401	0.9817	0.0013	0.0536	0.0477	119.5809	0.0117	0.78	3.24	5.89	7.89E-03	0.32	0.29	717.49	0.07
Backhoe	1	6	Tractors/Loaders/Backhoes Composite	0.0862	0.3824	0.5816	0.0008	0.0435	0.0387	66.8029	0.0078	0.52	2.29	3.49	4.65E-03	0.26	0.23	400.82	0.05

Emissions from On Road Equipment

Y = (N)(D)(EF)

where,
Y = Daily emissions of criteria pollutant, lbs/day.
N = Number of trips per day.
D = Distance per trip, miles.
EF = Emission factor for criteria pollutant, lb/mile (EMFAC 2007 (v2.3) Emission Factors for On-Road Vehicles, SCAQMD).

				Emission factors (lbs/mile)										Emissions (lbs/day)											
Type	Year	Total daily round trips	Miles during trip	VOC	CO	NOx	SOx	PM10, tire and brake	PM10, exhaust	PM2.5, tire and brake	PM2.5, exhaust	CO2	CH4	VOC	CO	NOx	SOx	PM10, tire and brake	PM10, exhaust	Total PM10	PM2.5, tire and brake	PM2.5, exhaust	Total PM2.5	CO2	CH4
Worker trips	2012	6	20	0.000796	0.007655	0.000776	0.000011	0.000090		0.000057		1.101525	0.000072	0.10	0.92	0.09	1.29E-03	1.08E-02	0	1.08E-02	6.90E-03	0	6.90E-03	132.18	8.60E-03
Soil hauling	2012	1	2.2	0.002528	0.010215	0.030924	0.000040	0.001496	0.001355	0.001294	0.001248	4.215908	0.000117	5.56E-03	2.25E-02	6.80E-02	8.89E-05	3.29E-03	2.98E-03	6.27E-03	2.85E-03	2.75E-03	5.59E-03	9.27	2.56E-04

Indirect Emissions of Carbon Dioxide from the Manufacturing of Steel

Y = QFk

where,
Y = Daily emissions of carbon dioxide, lbs/day.
Q = Quantity of steel used, 0.03 tons/day.
F = Emission factor for carbon dioxide, 1.70 lb/lbs (International Iron and Steel Institute, 2005 Average Industry Carbon Dioxide Emissions).
k = Conversion factor, 2,000 lb/ton.

Y = (0.03 tons/day)(2000 lb/ton)(1.70 lb/lb) = 102 lbs/day

Emissions of VOC from Paving

Y = (N)(EF)

where,
Y = Daily emissions of VOC, lbs/day.
N = Number of acres paved per day, 0.0004 acres.
EF = Emission factor for VOC during paving, 2.62 lbs/acre (URBEMIS 2007, V9.2.4).

Y= (0.0004 acres)(2.62 lbs/acre) = 0.001 lbs/day

Removal of Existing Equipment

Emissions from Off Road Equipment

Y = (N)(H)(EF)

where,
Y = Daily emissions of criteria pollutant, lbs/day.
N = Number of pieces of equipment in a specified equipment category.
H = Hours per day of equipment operation.
EF = Emission factor for criteria pollutant, lb/hr (CEQA Air Quality Handbook (SCAQMD 1993) Table A9-8 Off-road Mobile Sources Emission Factors).

				Emission factors, lb/hr								Emissions, lbs/day							
Equipment	Number	Hours	URBEMIS Designation	VOC	CO	NOx	SOx	PM10	PM2.5	CO2	CH4	VOC	CO	NOx	SOx	PM10	PM2.5	CO2	CH4
Crane	1	6	Cranes Composite	0.1425	0.4946	1.2753	0.0014	0.0553	0.0492	128.6448	0.0129	0.85	2.97	7.65	8.26E-03	0.33	0.30	771.87	0.08
Forklift	1	6	Rough Terrain Forklifts Composite	0.1093	0.4680	0.6995	0.0008	0.0587	0.0523	70.2808	0.0099	0.66	2.81	4.20	4.90E-03	0.35	0.31	421.68	0.06
Dump truck	1	6	Off-Highway Trucks Composite	0.2241	0.6635	2.0158	0.0027	0.0715	0.0636	260.0826	0.0202	1.34	3.98	12.10	0.02	0.43	0.38	1,560.50	0.12
Hauling truck	1	6	Off-Highway Trucks Composite	0.2241	0.6635	2.0158	0.0027	0.0715	0.0636	260.0826	0.0202	1.34	3.98	12.10	0.02	0.43	0.38	1,560.50	0.12
Flatbed truck	1	6	Off-Highway Trucks Composite	0.2241	0.6635	2.0158	0.0027	0.0715	0.0636	260.0826	0.0202	1.34	3.98	12.10	0.02	0.43	0.38	1,560.50	0.12
Excavator	1	6	Excavators Composite	0.1300	0.5401	0.9817	0.0013	0.0536	0.0477	119.5809	0.0117	0.78	3.24	5.89	7.89E-03	0.32	0.29	717.49	0.07
Backhoe	1	6	Tractors/Loaders/Backhoes Composite	0.0862	0.3824	0.5816	0.0008	0.0435	0.0387	66.8029	0.0078	0.52	2.29	3.49	4.65E-03	0.26	0.23	400.82	0.05

Emissions from On Road Equipment

Y = (N)(D)(EF)

where,
Y = Daily emissions of criteria pollutant, lbs/day.
N = Number of trips per day.
D = Distance per trip, miles.
EF = Emission factor for criteria pollutant, lb/mile (EMFAC 2007 (v2.3) Emission Factors for On-Road Vehicles, SCAQMD).

				Emission factors (lbs/mile)										Emissions (lbs/day)										
Type	Year	Total daily round trips	Miles during trip	VOC	CO	NOx	SOx	PM10, tire and brake	PM10, exhaust	PM2.5, tire and brake	PM2.5, exhaust	CO2	CH4	VOC	CO	NOx	SOx	PM10, tire and brake	PM10, exhaust	Total PM10	PM2.5, tire and brake	PM2.5, exhaust	Total PM2.5	CO2	CH4
Worker trips	2012	5	20	0.000796	0.007655	0.000776	0.000011	0.000090		0.000057		1.101525	0.000072	0.08	0.77	0.08	1.07E-03	8.98E-03	0	8.98E-03	5.75E-03	0	5.75E-03	110.15	7.17E-03
Material hauling	2012	5	4.8	0.002528	0.010215	0.030924	0.000040	0.001496	0.001355	0.001294	0.001248	4.215908	0.000117	0.06	0.25	0.74	0.00	0.04	0.03	0.07	0.03	0.03	0.06	101.18	0.00

APPENDIX 5

United States Department of the Interior

FISH AND WILDLIFE SERVICE
Ventura Fish and Wildlife Office
2493 Portola Road, Suite B
Ventura, California 93003

IN REPLY REFER TO:
08EVEN00-2012-I-0308

May 23, 2012

Alessandro Amaglio
U.S. Department of Homeland Security
Federal Emergency Management Agency, Region IX
1111 Broadway, Suite 1200
Oakland, California 94607-4052

Subject: Upper Narrows Interceptor Replacement Project (FEMA-1952-DR-CA, PW #828)

Dear Mr. Amaglio:

This letter is in response to your request dated March 19, 2012 and received by our office on March 20, 2012, and subsequent e-mail dated May 14, 2012, for our concurrence with your determination that the proposed interceptor replacement project located along the Upper Narrows portion of the Mojave River in Victorville, San Bernardino County, California, may affect but is not likely to adversely affect the federally endangered least Bell's vireo (*Vireo bellii pusillus*). You also noted that the proposed project will not affect the federally endangered southwestern willow flycatcher (*Empidonax traillii extimus*) or its critical habitat, and the threatened Mojave desert tortoise (*Gopherus agassizii*). Your request and our response are made pursuant to section 7(a)(2) of the Endangered Species Act of 1973, as amended (Act).

The Federal Emergency Management Administration (FEMA) is proposing to provide federal financial assistance to the Victor Valley Wastewater Reclamation Authority (VVWRA), through the California Emergency Management Agency, to permanently replace a main sewer line that was damaged in a presidentially declared winter storm (FEMA-1952-DR-CA, January 21, 2011). The proposed project involves abandoning the existing damaged interceptor in place and re-installing the sewer line at 30 to 35 feet below the Mojave River via horizontal directional drilling, and relocating the remaining Schedule V sewer line out of the riverbed via jack and bore, tunneling, and conventional open cut trenching along the streets in the adjacent City of Victorville. Approximately 1.0 acre of river habitat would be temporarily disturbed as a result of construction activity near the Mojave River at the horizontal directional drilling areas. All other activity will occur outside of the riparian areas. No riparian vegetation would be removed.

Section 7(a)(2) of the Act (16 U.S.C. 1531 *et seq.*), requires Federal agencies to ensure that any actions they undertake, fund, or authorize are not likely to jeopardize the continued existence of listed species or adversely modify designated critical habitat. As an initial step in complying with section 7(a)(2), the implementing regulations require the Federal agency to determine whether its action "may affect" listed species or critical habitat (50 Code of Federal Regulations

402.14(a)). If the proposed action may affect listed species or critical habitat, the Act requires that the Federal agency consult with the U.S. Fish and Wildlife Service (Service).

You have determined that the proposed action would have "no effect" on the southwestern willow flycatcher and its critical habitat, and the Mojave desert tortoise, and you have requested our concurrence with your determination. The regulations implementing section 7(a)(2) of the Endangered Species Act (50 CFR 402) do not require our concurrence with a "no effect" determination made by a Federal agency. Consequently, we decline to concur with your "no effect" determination regarding the proposed project. Based upon the information you provided with your request, however, the site does not appear likely to support the southwestern willow flycatcher or desert tortoise, and is not within designated southwestern willow flycatcher critical habitat.

The proposed pipeline alignment is located within the range of the least Bell's vireo and suitable habitat for this species occurs in close proximity. Surveys according to the Service's protocol for least Bell's vireo were conducted by Tom Dodson & Associates' biologists from April 15 to July 10, 2011. One least Bell's vireo territory was detected within 1000 feet of the proposed project during these surveys. Least Bell's vireo could be impacted by project activities if disturbance occurs within or near the riparian habitat during the nesting from March 15 through September 15. In addition, noise and vibration from heavy equipment could indirectly impact non-breeding birds by causing them to move away from project activities year-round.

We concur with your decision that the proposed action is not likely to adversely affect the least Bell's vireo. We have reached this conclusion because no above-ground work will occur within riparian habitat and no riparian vegetation will be removed; the only above-ground work within reaches 1A and 1B will occur at the portals of the horizontal directional drilling sites located in previously disturbed areas outside of the riparian habitat boundaries; and no activity will occur within reaches 1-A and 1-B during the nesting season from March 15 through September 15. Consequently, further consultation, pursuant to section 7(a)(2) of the Act is not required. If the proposed action changes in any manner that may affect the least Bell's vireo, please contact us immediately to determine whether additional consultation is required.

If you have any questions regarding this matter, please contact Amy Torres of the Ventura Fish and Wildlife Office at (909) 382-2654.

Sincerely,

Carl T. Benz
Assistant Field Supervisor

APPENDIX 6

IDENTIFICATION AND EVALUATION OF HISTORIC PROPERTIES

UPPER NARROWS PIPELINE REPLACEMENT PROJECT

City of Victorville and Town of Apple Valley
San Bernardino County, California
DR-1952; PW-VVW04F-828

For Submittal to:

Victor Valley Wastewater Reclamation Authority
15776 Main Street, Suite 3
Hesperia, CA 92345
and
Federal Emergency Management Agency
1111 Broadway, Suite 1200
Oakland, CA 94607

Prepared for:

Tom Dodson, President
Tom Dodson and Associates
2150 North Arrowhead Avenue
San Bernardino, CA 92405

Prepared by:

CRM TECH
1016 E. Cooley Drive, Suite A/B
Colton, CA 92324

Bai "Tom" Tang, Principal Investigator
Michael Hogan, Principal Investigator

November 18, 2011
Revised February 17, 2012
CRM TECH Contract No. 2535A

NATIONAL ARCHAEOLOGICAL DATABASE INFORMATION

Author(s): Bai "Tom" Tang, Principal Investigator
Terri Jacquemain, Historian/Report Writer
Daniel Ballester, Archaeologist
Harry M. Quinn, Archaeologist/Geologist

Consulting Firm: CRM TECH
1016 E. Cooley Drive, Suite A/B
Colton, CA 92324
(909) 824-6400

Date: November 18, 2011; revised February 17, 2012

Title: Identification and Evaluation of Historic Properties: Upper Narrows Pipeline Replacement Project, City of Victorville and Town of Apple Valley, San Bernardino County, California; DR-1952; PW-VVW04F-828

For Submittal to: Victor Valley Wastewater Reclamation Authority
15776 Main Street, Suite 3
Hesperia, CA 92345
(760) 948-9849
and
Federal Emergency Management Agency
1111 Broadway, Suite 1200
Oakland, CA 94607
(510) 627-7027

Prepared for: Tom Dodson, President
Tom Dodson and Associates
2150 North Arrowhead Avenue
San Bernardino, CA 92405
(909) 882-3612

USGS Quadrangles: Victorville, Calif., 7.5' quadrangle; Sections 10 and 15, T5N R4W, San Bernardino Baseline and Meridian

Project Size: Approximately 11.8 acres and 2.18 linear miles

Keywords: Victor Valley, southern Mojave Desert; Phase I historical/archaeological resources survey; 36-000060 (prehistoric habitation site); 36-000063 (prehistoric habitation site and rock art, encompassing 36-000064); 36-000968 (Native American burial site); 36-002910 (former U.S. Route 66/ National Old Trails Highway); 36-003033 (Mojave Trail); 36-006793 (Atchison, Topeka and Santa Fe Railway); 36-013879 (prehistoric habitation site, encompassing 36-000058, 36-000059, and a portion of 36-000060); 36-014171 (Rainbow Bridge); controlled excavations recommended during the undertaking at Site 36-013879; archaeological monitoring recommended elsewhere due to sensitivity for subsurface deposits of prehistoric cultural remains

EXECUTIVE SUMMARY

Between June 2011 and February 2012, at the request of Tom Dodson and Associates, CRM TECH performed a historic property survey on the Area of Potential Effects (APE) for the Upper Narrows Pipeline Replacement Project in the City of Victorville and the Town of Apple Valley, San Bernardino County, California. The undertaking proposes to install a new sewer interceptor line to restore the function of an existing line that was damaged by winter storms in 2010. The APE is delineated to encompass the maximum extent of ground disturbance required for the construction of the new sewer line as well as the location of the existing line to be abandoned, and includes approximately 2.18 linear miles of pipeline rights-of-way and six construction staging areas measuring approximately 11.8 acres in total. The entire APE lies within Sections 10 and 15, T5N R4W, San Bernardino Baseline and Meridian.

The study is a part of the environmental review process for the proposed undertaking, as required by the Federal Emergency Management Agency (FEMA) in compliance with Section 106 of the National Historic Preservation Act. The purpose of the study is to provide FEMA and other interested consulting parties with the necessary information and analysis to determine whether the proposed undertaking would have an effect on any "historic properties," as defined by 36 CFR 800.16(l)(1), that may exist in or near the APE. In order to accomplish the objective of the study, CRM TECH conducted a historical/archaeological resources records search, pursued historical and geomorphologic background research, contacted Native American representatives, and carried out a systematic field survey.

As a result of the records search, eight previously recorded historical/archaeological sites were found to be located partially within the APE, including four prehistoric sites, three linear features of historical origin, and a bridge. These eight sites are listed below:

Site No.	**Description**
36-000060	Prehistoric habitation site
36-000063	Prehistoric habitation site (encompassing 36-000064)
36-000968	Native American burial site
36-002910	Former U.S. Route 66/National Old Trails Highway
36-003033	Mojave Trail
36-006793	Atchison, Topeka and Santa Fe (ATSF) Railway
36-013879	Prehistoric habitation site (encompassing 36-000058, 36-000059, and part of 36-000060)
36-014171	Rainbow Bridge

During the field survey, three bedrock milling features and a few lithic and faunal artifacts were recorded within the previously established boundary of Site 36-000063, while several groundstone and chipped-stone artifacts were found at Site 36-013879 near—but outside—the APE. No features or artifacts associated with the other two prehistoric sites were observed within the APE, and no physical remains were found of 36-003033, the historic Mojave Trail. The other three historic-period sites, 36-002910 (Route 66), 36-006793 (ATSF Railway), and 36-014171 (Rainbow Bridge), were confirmed to be present at their recorded locations and in use as parts of the modern transportation system.

As currently proposed, much of the undertaking will be carried out through underground tunneling and horizontal directional drilling at depths well below the surface cultural features and the known subsurface archaeological deposits, while the portion of the undertaking along the existing sewer line consists only of the abandonment of the damaged pipeline. In light of their locations outside the vertical extent of the APE or in areas where no ground disturbance or

construction will occur, it is determined that the undertaking has no potential to affect the significance or integrity of five of the eight sites listed above, namely 36-000060, 36-000968, 36-003033, 36-006793, and 36-014171.

At Site 36-000063, the proposed undertaking consists of tunneling at depths well below any reasonable expectation for archaeological deposits and equipment storage in a portion of the site where no surface features or artifacts were observed. As such, it has little potential to impact the condition of the site. Furthermore, the site was previously determined by the State of California Office of Historic Preservation not to be eligible for listing in the National Register of Historic Places. Therefore, Site 36-000063 does not meet the definition of a "historic property" under Section 106.

Site 36-002910 represents a famed old highway that has been determined to qualify as a "historic property." Current project plans call for trenching along a small segment of the site near the northwestern end of the APE for the installation of the replacement pipeline if the Seventh Street alternative is selected. Although the historic value and legendary status of Route 66 are well documented, the physical manifestation of the site is now a modern highway under constant use, and its appearance reflects much more the results of repeated upgrading and maintenance in recent decades than the heyday of "the Mother Road." As working elements of the modern infrastructure, the physical components of the site in the APE do not contribute to its significance or integrity. Therefore, 36-002910 will not be adversely affected by the undertaking.

The final site, 36-013879, is a large prehistoric habitation site that encompasses the easternmost staging area and several dozen feet of the proposed pipeline alignment at the northeastern end of the APE. A second staging area is located adjacent to the established site boundary, near the location where the artifacts were found on the surface during this study. Since trenching is proposed for this segment of the pipeline alignment, the undertaking will inevitably cause a physical impact on a small portion of the site. At the staging area within the site boundary, however, the ground surface has been extensively disturbed in the past, and no surface artifacts or features were observed. Since no subsurface ground disturbances are anticipated at that location, the undertaking is unlikely to impact any cultural remains in that portion of the site.

At this time, the qualification of Site 36-013879 as a "historic property" is yet to be ascertained. While the evaluation of 36-013879 in its entirety is well beyond the scope of statutory compliance for this undertaking, the anticipated impact necessitates a determination on whether the small portion of the site along the proposed pipeline alignment contains important archaeological information in subsurface deposits and thus contributes to the potential significance of the site as a whole. Due to the lack of sufficient data, that determination cannot be made without further archaeological investigations, including subsurface excavations.

In summary, among the eight known historical/archaeological sites lying partially in the APE, only 36-013879 may constitute a "historic property" that could be affected by the implementation of the proposed undertaking. However, the presence of the known prehistoric sites in a relatively concentrated cluster in and near the APE, including several with buried components, suggests a heightened probability for similar cultural remains to be encountered in subsurface deposits at elevations above the Mojave River bed. Representatives of local Native American groups have also expressed concerns over archaeological remains in the APE due to its location on the Mojave River. Furthermore, the geomorphologic profile of the area indicates that conditions conducive to long-term prehistoric habitation exist in the APE, and the records search reveals that prehistoric sites have been reported in the surrounding area in the same or a similar geomorphologic context as the APE.

The deeper sediments within the APE, generally beyond ten feet below the ground surface, are estimated to be as much as 10,000 years old, by far predating the proliferation of Native American settlements in the Victor Valley, and are therefore unlikely to yield archaeological deposits. Meanwhile, the surface soils within the paved roadways in the APE, generally to the depth of five feet, consist of roadbed fill, where the likelihood of encountering any potentially significant archaeological remains has been greatly reduced by extensive past disturbances. The sediments between five and ten feet in depth within the roadways and the top ten feet of sediments elsewhere in the APE, therefore, should be considered sensitive for buried archaeological deposits of prehistoric origin.

Based on these findings, CRM TECH presents the following recommendations to FEMA and other interested consulting parties:

- Trenching operations within or adjacent to the boundary of Site 36-013879 should be accomplished through controlled excavations under the direction and close observation of a qualified archaeologist in order to ascertain the presence or absence of potentially significant subsurface cultural remains in that portion of the site. Given its location within the Desert Knolls Wash, hand-excavation of standard archaeological units is not unlikely to be productive. However, if a substantial archaeological deposit is encountered, the mechanical excavations should be halted or diverted while an archaeological team recovers the materials through procedures consistent to a standard archaeological testing program. The ultimate goal of these procedures is to assess the archaeological data potential of the portion of Site 36-013879 to be affected by the undertaking, and thereby determine its eligibility as a "historic property."
- In order to prevent inadvertent effects on other portions of Site 36-013879 by heavy equipment maneuvers, the staging areas within and adjacent to the site boundary should be capped with imported soil to the depth of at least one foot, thereby preserving all archaeological deposits underground. The surface artifacts found during this study should be collected prior to the commencement of the undertaking, and disturbances to the existing ground surface within the site boundary should be prohibited.
- In order to properly identify, evaluate and, if necessary, protect previously undetected subsurface cultural deposits elsewhere, an archaeological monitoring program, including monitoring by representatives of local Native American groups, should be implemented during open trench and pit excavations within the top ten feet of sediments except along the paved roadways, where monitoring should commence upon reaching native soils beyond the roadbed fill, generally five feet in depth.
- Horizontal directional drilling, tunnel excavation, and bore-and-jack operations cannot be effectively monitored, but the back dirt from these activities within the archaeologically sensitive sediments should be examined periodically by a qualified archaeologist. If any potentially significant cultural remains are discovered, controlled excavation under the direction of an archaeologist may become necessary at that location as well, if feasible.
- In the unlikely event that cultural materials are encountered within sediments that do not require monitoring, all work in that area should be halted or diverted until a qualified archaeologist can evaluate the nature and significance of the finds.

Under these conditions, the proposed undertaking may be cleared to proceed in compliance with Section 106 regulations.

TABLE OF CONTENTS

EXECUTIVE SUMMARY i
INTRODUCTION 1
PROJECT DESCRIPTION AND AREA OF POTENTIAL EFFECTS 3
SETTING 4
Current Natural Setting 4
Geologic Setting 4
Cultural Setting 5
Prehistoric Context 5
Ethnohistoric Context 6
Historical Context 7
RESEARCH METHODS 8
Records Search 8
Geoarchaeological Analysis 9
Historical Background Research 9
Native American Participation 9
Field Survey 9
RESULTS AND FINDINGS 10
Previous Cultural Resources Studies in the Vicinity 10
Geoarchaeological Profile 12
Historical Overview of the APE 12
Native American Input 14
Potential Historic Properties in the APE 14
Site 36-000060 (Prehistoric Habitation Site) 15
Site 36-000063 (Prehistoric Habitation Site) 15
Site 36-000968 (Native American Burial Site) 16
Site 36-002910 (National Old Trails Highway) 16
Site 36-003033 (Mojave Trail) 17
Site 36-006793 (ATSF Railway) 18
Site 36-013879 (Prehistoric Habitation Site) 18
Site 36-014171 (Rainbow Bridge) 19
MANAGEMENT CONSIDERATIONS 19
Regulatory Guidelines 19
Discussion 20
Conclusion and Recommendations 22
REFERENCES 24
APPENDIX 1: Personnel Qualifications 27
APPENDIX 2: Correspondence with Native American Representatives 33
APPENDIX 3: Previously Recorded Cultural Resources in the Vicinity 41

LIST OF FIGURES

Figure 1. Project vicinity 1
Figure 2. Area of Potential Effects 2
Figure 3. Typical landscapes in the APE 5
Figure 4. Previous cultural resources studies in the vicinity 11
Figure 5. The APE and vicinity in 1853-1855 13
Figure 6. The APE and vicinity in 1920-1932 13
Figure 7. The APE and vicinity in 1952-1956 13
Figure 8. Current condition of Site 36-002910 along the APE 17
Figure 9. Artifacts found at Site 36-013879 19

INTRODUCTION

Between June and November, 2011, at the request of Tom Dodson and Associates, CRM TECH performed a historic property survey on the Area of Potential Effects (APE) for the Upper Narrows Pipeline Replacement Project in the City of Victorville and the Town of Apple Valley, San Bernardino County, California (Fig. 1). The undertaking proposes to install a new sewer interceptor line to restore the function of an existing line that was damaged by winter storms in 2010. The APE is delineated to encompass the maximum extent of ground disturbance required for the construction of the new sewer line as well as the location of the existing line to be abandoned, and includes approximately 2.18 linear miles of pipeline rights-of-way and six construction staging areas measuring approximately 11.8 acres in total. The entire APE lies within Sections 10 and 15, T5N R4W, San Bernardino Baseline and Meridian (Fig. 2).

The study is a part of the environmental review process for the proposed undertaking, as required by the Federal Emergency Management Agency (FEMA) in compliance with Section 106 of the National Historic Preservation Act. The purpose of the study is to provide FEMA and other interested consulting parties with the necessary information and analysis to determine whether the proposed undertaking would have an effect on any "historic properties," as defined by 36 CFR 800.16(l)(1), that may exist in or near the APE.

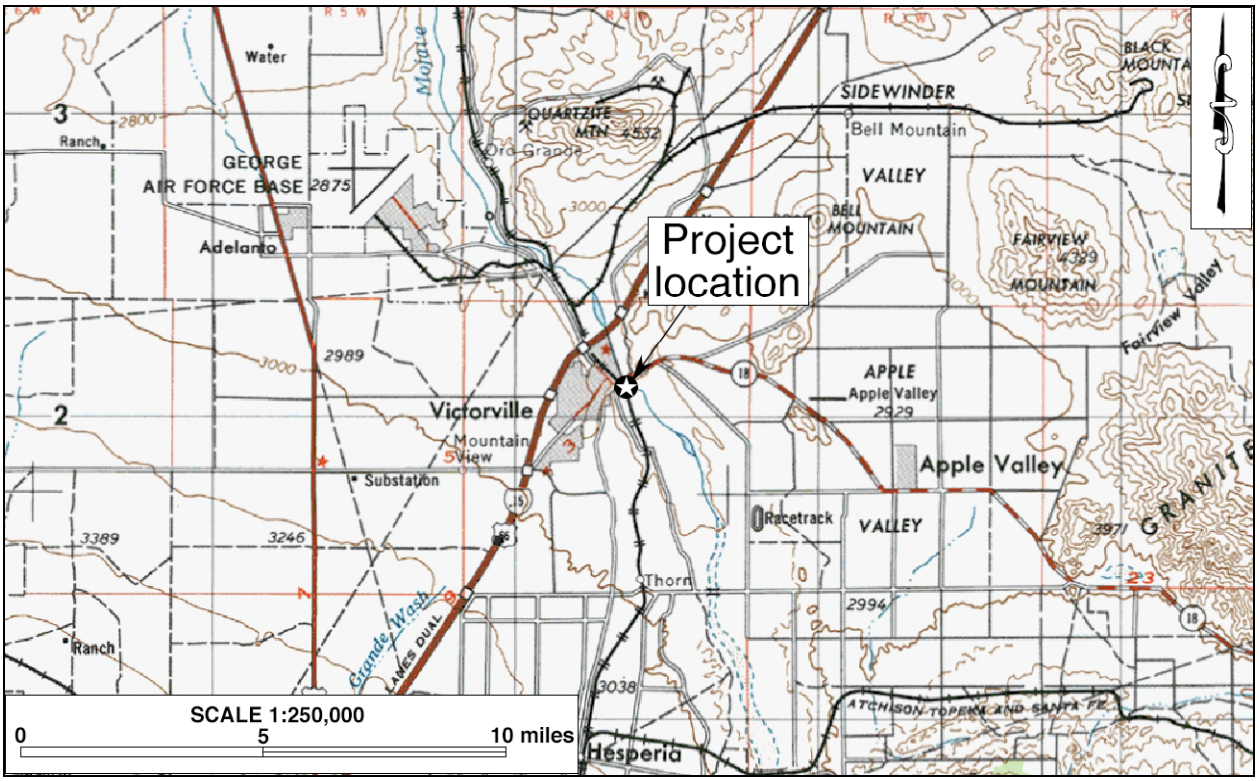

Figure 1. Project vicinity. (Based on USGS San Bernardino, Calif., 1:250,000 quadrangle [USGS 1969])

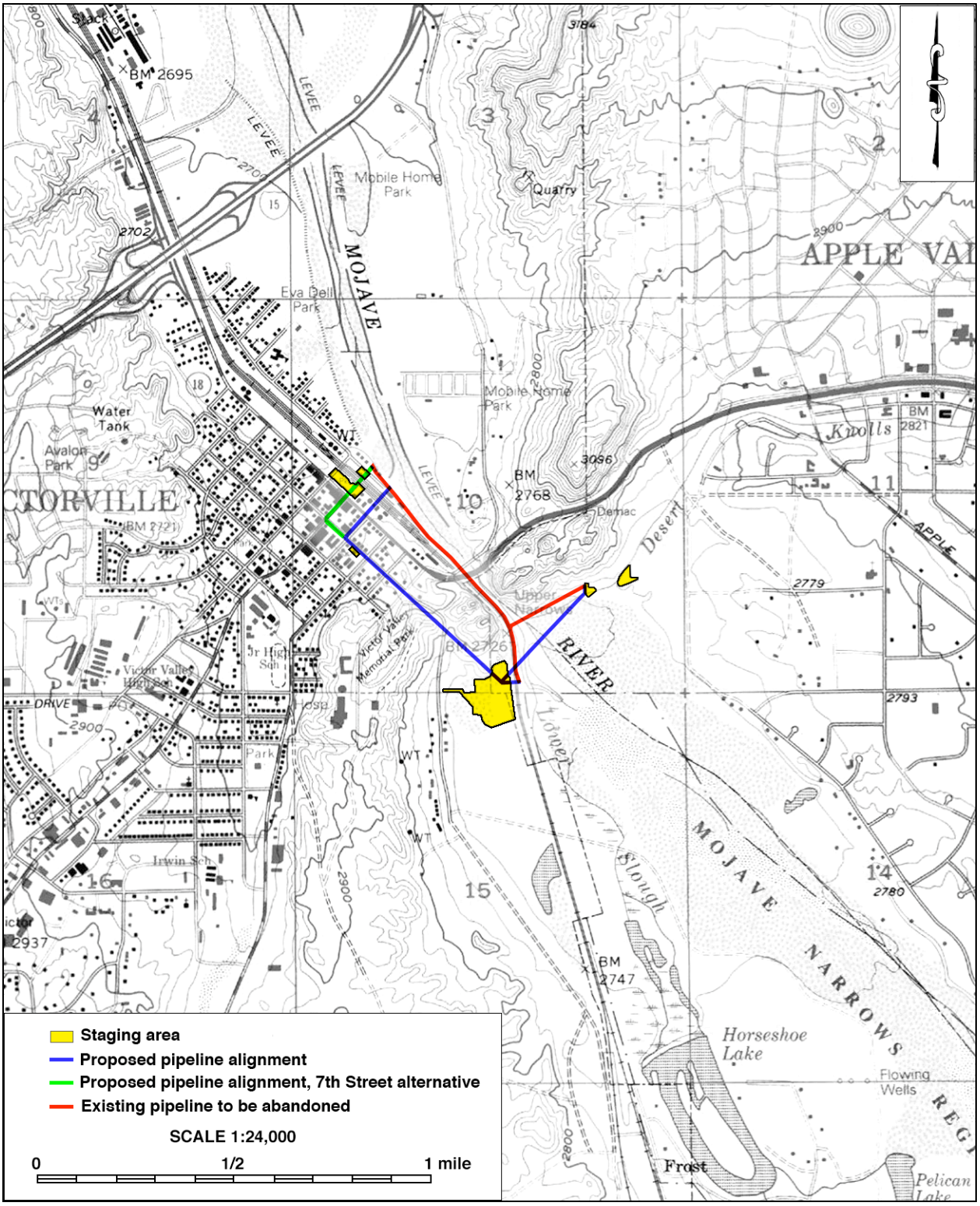

Figure 2. Area of Potential Effects. (Based on USGS Victorville, Calif., 1:24,000 quadrangle [USGS 1993])

In order to accomplish the objective of the study, CRM TECH conducted a historical/ archaeological resources records search, pursued historical and geomorphologic background research, contacted Native American representatives, and carried out a systematic field survey. The following report is a complete account of the methods and results of the various avenues of research, and the final conclusion of the study.

PROJECT DESCRIPTION AND AREA OF POTENTIAL EFFECTS

Utilizing a combination of open trench, bore-and-jack, tunnel, and horizontal directional drilling (HDD), the proposed undertaking seeks to install a new sewer pipeline that will circumvent a portion of an existing sewer pipeline that was damaged during winter storms in 2010. The old and new sewer lines will converge near the northeastern end of the APE behind the Lewis Center for Educational Research, approximately 100 feet from an HDD portal near the confluence of the Mojave River and the Desert Knolls Wash, and at the northwestern end via one of two alternative alignments along Seventh Street or Eighth Street.

In addition, the new pipeline will also connect to the old one at the southeastern end of the APE, just east of the Burlington Northern Santa Fe Railway (formerly the Atchison, Topeka and Santa Fe [ATSF] Railway) and east of the Kemper Campbell Ranch. Once the undertaking is completed, the circumvented segment of the existing sewer line will be abandoned in place and a temporary above-ground sewer pipeline along the same route will be removed.

According to 36 CFR 800.16(d), the APE is "the geographic area or areas within which an undertaking may directly or indirectly cause alterations in the character or use of historic properties, if any such properties exist." For this undertaking, as previously noted, the APE encompasses the maximum extent of ground disturbances required for the construction of the new sewer line as well as the location of the existing line to be abandoned.

As currently proposed, the APE includes 3,685 linear feet of the existing Victor Valley Interceptor sewer line, 1,295 linear feet of the existing Apple Valley Interceptor sewer line, the proposed alignment of a 6,505-feet replacement sewer line with an alternative route, and five construction staging areas. Totaling approximately 13.15 acres, the six staging areas are located near the northeastern (1.1 acre and 0.5 acre), northwestern (0.1 acre, 1.50 acre, and 0.35 acre), and southern (8.20 acre) ends of the proposed pipeline route.

As part of the undertaking, bore-and-jack and tunnel portals will be excavated to the depths of 15-35 feet below the ground surface. Between the portals, the tunnel will extend through most of the APE, approximately 2,634 linear feet in total. At the northwestern end, the undertaking will require trenching approximately 1,477 linear feet to the depths of 15-30 feet, of which approximately 300 feet will not be within paved roadways. The APE lies approximately 1.5 miles southeast of Interstate 15 and near State Highway 18, the Burlington Northern Santa Fe Railway, and the Mojave River Channel. The configuration and location of the APE are illustrated in Figure 2.

SETTING

CURRENT NATURAL SETTING

The City of Victorville and the Town of Apple Valley, both incorporated communities, are located in the heart of the Victor Valley, on the southern rim of the Mojave Desert, and north of the San Bernardino-San Gabriel mountain ranges. Dictated by this geographic setting, the climate and environment of the area is typical of southern California high desert region, so named because of its higher elevation than the Colorado Desert to the southeast. The climate is marked by extremes in temperature and aridity, with summer highs reaching well over 110ºF and winter lows dropping below freezing. Average annual precipitation is less than five inches.

The APE straddles the corporate boundary of the two cities and extends across the Mojave River at a point known as the Upper Narrows. The Upper Narrows is essentially a bottleneck created by two granitic ridges that compel the river, which runs mostly underground, to the surface and through a narrow channel for a short distance, roughly 1,000 feet. Elevations in the APE range approximately between 2,710 and 2,800 feet above mean sea level, from the riverbed to the crest of the ridge.

The existing pipeline and the eastern portion of the replacement pipeline are below ground within open land along the Mojave River and the Desert Knolls Wash, and across the northwestern end of the Mojave Narrows Regional Park (Fig. 3). The proposed pipeline alignment west of the Mojave River inclines from the riverbed through the southerly ridge of the Upper Narrows, where the ground surface is scattered with granite outcrops, and then runs under C Street, Seventh Street, and Eighth Street in an area of downtown Victorville with mixed residential and commercial development. One of the staging areas is in a paved area on the south side of C Street, while the other five are located on vacant land (Fig. 3).

Vegetation in and near the APE consists mainly of domestic landscaping plants in the developed areas, with native plants on undeveloped land and along the shoulders of the roads. The native plants observed in and near the APE include Joshua trees, cottonwood trees, mustard, foxtails, datura, creosote bushes, tumbleweeds, and typical small desert shrubs and grasses. Soils in most of the APE are light grayish-brown, medium-grained sands and decomposing granite, with coarse fluvial sands near the river channel.

GEOLOGIC SETTING

The Victor Valley is located in the Mojave Desert geomorphic/geologic province of southeastern California (Jenkins 1980; Harms 1996) in what Dibblee (1967) and Coombs et al. (1997:7) refer to as the Western Mojave Desert region. The region is marked by scattered, isolated mountains and numerous broad, shallow basins, some with dry lakebeds at the lowest points. These mountains and intermountain valleys tend to have a northwest-southeast trend that is mainly controlled by faulting (Harms 1996). The basins are usually filled with sediments ranging in age from Miocene to Recent, and many have pediment surfaces developed along the margins (Dibblee 1967:49-82; Meisling and Weldon 1989:110). Pediment surfaces are commonly covered by desert pavement, which provides protection from the erosive forces of sheet wash and channeling.

Figure 3. Typical landscapes in the APE. *Top row*: the existing sewer pipeline in the Mojave River (left, view to the east) and along a gravel road (right, view to the northwest); *center row*: the proposed pipeline alignment rising toward a hill from the riverbed (left, view to the northeast) and at the intersection of C Street and 8th Street (right, view to the southeast); *bottom row*: staging areas along D Street (left, view to the northeast) and near the southern end of the proposed pipeline alignment (right, view to the south). (Photographs taken on July 9 and November 10, 2011)

CULTURAL SETTING

Prehistoric Context

In order to understand Native American cultures prior to European contact, archaeologists have devised chronological frameworks on the basis of artifacts and site types that go back

some 12,000 years. Currently, the chronology most frequently applied in the Mojave Desert, including the Victor Valley area, divides the region's prehistory into five periods marked by changes in archaeological remains, reflecting different ways in which Native peoples adapted to their surroundings. According to Warren (1984) and Warren and Crabtree (1986), the five periods are as follows: the Lake Mojave Period, 12,000 years to 7,000 years ago; the Pinto Period, 7,000 years to 4,000 years ago; the Gypsum Period, 4,000 years to 1,500 years ago; the Saratoga Springs Period, 1,500 years to 800 years ago; and the Protohistoric Period, 800 years ago to European contact.

This time frame is based on general changes in artifactual remains progressing from large stone projectile points with few stone tools for grinding food products to smaller projectile points with an increase in milling stones. The scheme also notes increases in population, changes in food procurement and resource exploitation, and more cultural complexity over time. During the Protohistoric Period, there is evidence of contact with the Colorado River tribes and the introduction of pottery across the Mojave Desert.

During prehistoric times, the project area and vicinity would have been an ideal place to inhabit because of its close proximity to the Mojave River, which would have afforded aboriginal groups with a dependable source of water and subsistence resources. The river was also a major route for interregional trade/exchange, with creeks and drainages typically functioning in prehistoric settlement and subsistence systems as travel corridors, special use areas, or opportunistic locations for temporary camps.

Many of the Native American archaeological sites identified in and around Victorville and Apple Valley consist of ancient habitation debris such as midden, groundstone fragments, chipped stone pieces, fire-affected rock, and faunal remains. Rock shelters and bedrock milling features have been noted in the area while a number of rock art panels have been recorded. As expected, many of these sites were found along the banks of the Mojave River.

Ethnohistoric Context

The Victor Valley is generally considered to be a part of the traditional territories of the Serrano and the Vanyume Indians. The basic written sources on Serrano and Vanyume cultures are Kroeber (1925), Strong (1929), and Bean and Smith (1978). The following ethnographic discussion of the Serrano and Vanyume peoples is based on these sources.

Very little is known about the Vanyume people. Linguistically they were probably related to the Serrano, their southern neighbors, but politically they seem to have diverged. Never large in number, the Vanyume population dwindled rapidly between 1820 and 1834, when southern California Indians were removed to the various missions and their *asistencias.* As a group, the Vanyume virtually disappeared well before 1900.

The Serrano territory is centered at the San Bernardino Mountains, but also includes the southern rim of the Mojave Desert, stretching from Victorville eastward to Twentynine Palms. However, it is nearly impossible to assign definitive boundaries for the Serrano territory due to the nature of the tribe's clan-based organization as well as the lack of reliable data.

The name Serrano is derived from a Spanish term for "mountaineer" or "highlander." Prior to European contact, the Serrano were primarily gatherers and hunters, and occasional fishers, who settled mostly where flowing water emerged from the mountains. Shell, wood, bone, stone, and plant fibers were used in a variety of implements, such as lavishly decorated baskets, pottery, rabbit-skin blankets, and musical instruments.

The Serrano people were loosely organized into exogamous clans, led by hereditary heads, and the clans in turn were affiliated with one of two exogamous moieties. The exact nature of the clans, their structure, function, and number are not known, except that each clan was the largest autonomous political and landholding unit, the core of which was the patrilineage. There was no pan-tribal political union among the clans.

Although contact with Europeans may have occurred as early as 1771 or 1772, Spanish influence on Serrano lifeways was negligible until the 1810s, when a mission *asistencia* was established on the southern edge of Serrano territory. Between then and the end of the mission era in 1834, most of the Serrano in the San Bernardino Mountains, like the Vanyume, were removed to the nearby missions. At present, most Serrano descendants are found on the San Manuel and the Morongo Indian Reservations, where they participate in ceremonial and political affairs with other Native American groups on an inter-reservation basis.

Historical Context

The Victor Valley area received its first European visitor, the famed Spanish explorer Francisco Garcés, in 1776, and the first Euroamerican settlements appeared in the valley as early as 1860 (Peirson 1970:128). Despite these "early starts," due to its harsh environment, development in the arid high desert country of southern California was slow and limited for much of the historic period, and the Victor Valley remained only sparsely populated until the second half of the 20th century.

Garcés traveled through the Victor Valley along an ancient Indian trading route known today as the Mojave Trail. In the early 1830s, part of this trail was incorporated into the Old Spanish Trail, an important pack-train road that extended between southern California and Santa Fe, New Mexico. Some 20 years later, when the historic wagon road known as the Mormon Trail or Salt Lake Trail was established between Utah and southern California, it followed essentially the same route across the Mojave Desert. Since then, the Victor Valley has always served as a crucial link on a succession of major transportation arteries, where the heritage of the ancient Mojave Trail was carried on by the ATSF Railway since the 1880s, by the legendary U.S. Route 66 during the early and mid-20th century, and finally by today's I-15.

The City of Victorville traces its roots to stations on the ATSF Railway, which was completed by the California Southern Extension Railway Company, an ATSF subsidiary, in 1885. The Victorville station was initially named Victor, after Jacob Nash Victor, general manager of the California Southern, and was changed to Victorville in 1901 to avoid confusion with Victor, Colorado. With the convenience afforded by the railroad, settlement activities began in earnest in the Victor Valley, and reached a peak in the 1910s.

Thanks to the availability of fertile lands and the abundance of ground water, agriculture played a dominant role in the early development of the Victor Valley area. During the late 19th and early 20th centuries, settlers in the valley attempted a number of moneymaking staples, such as alfalfa, deciduous fruits, and poultry, with only limited success. Around the turn of the century, large deposits of limestone and granite were discovered, prompting cement manufacturing to become the leading industry in the valley.

During and after WWII, the George Air Force Base, established in 1941, added a new driving force in the local economy with its 6,000 military and civilian employees. The post-WWII era saw the beginning of sustained growth in the region, including Apple Valley. Beginning in 1945, Newton T. Bass and Bernard "Bud" Westlund, who as partners had made a fortune in the petroleum industry in Long Beach, acquired approximately 25,000 acres of land in Apple Valley and developed a new town under the name of Apple Valley Ranchos (Ryon 1964; O'Rourke 2004:37). Through a series of high-profile promotion campaigns, within 20 years Bass and Westlund had succeeded in turning this sparsely settled stretch of desert land into a western-themed town of 11,000 residents (O'Rourke 2004:41-43).

The City of Victorville was incorporated in 1962, followed in 1988 by the Town of Apple Valley. Long known for the availability of affordable land, the Victor Valley has seen rapid urban growth in recent decades. Once characterized as a commuter bedroom communities in support of the industrial and commercial centers in the Greater Los Angeles area, Victorville and Apple Valley have since established individual identities through residential, commercial, and civic development.

RESEARCH METHODS

RECORDS SEARCH

On July 1, 2011, CRM TECH archaeologist Nina Gallardo (see App. 1 for qualifications) completed the historical/archaeological resources records search at the Archaeological Information Center (AIC). Located at the San Bernardino County Museum, Redlands, the AIC is the State of California's official cultural resource records repository for San Bernardino County, and a part of the California Historical Resource Information System, established and maintained under the auspices of the Office of Historic Preservation.

During the records search, Gallardo examined maps and records on file at the AIC for previously identified cultural resources within or near the APE and existing cultural resources reports pertaining to the project vicinity. Previously identified cultural resources include properties designated as California Historical Landmarks, Points of Historical Interest, or San Bernardino County Historical Landmarks, as well as those listed in the National Register of Historic Places, the California Register of Historical Resources, or the California Historical Resources Inventory.

For the current study, the scope of the records search included the standard one-mile radius from the perimeters of the APE and an expanded five-mile radius to identify prehistoric—i.e., Native American—cultural resources found in the same or a similar geomorphologic context as the APE. The purpose of the expanded records search is to

assess the sensitivity of the APE for prehistoric cultural resources and help determine the potential of encountering significant subsurface cultural deposits during earth-moving activities associated with the undertaking.

GEOARCHAEOLOGICAL ANALYSIS

As part of the research procedures, CRM TECH geologist Harry M. Quinn, California Professional Geologist #3477 (see App. 1 for qualifications), pursued geomorphologic analysis to assess the APE's potential for the deposition and preservation of subsurface cultural deposits from the prehistoric period, which cannot be detected through standard surface archaeological survey. Sources consulted for this purpose included mainly geologic maps and literature compiled by Dibblee (1967; 2008) and Coombs et al. (1997). Findings from these sources were used to develop a geomorphologic history of the APE and address geoarchaeological sensitivity of the vertical APE.

HISTORICAL BACKGROUND RESEARCH

CRM TECH historian Terri Jacquemain (see App. 1 for qualifications) conducted the historical background research on the basis of published literature in local history and historic maps of the project vicinity. Among maps consulted for this study were U.S. General Land Office's (GLO) land survey plat maps dated 1856 and U.S. Geological Survey's (USGS) topographic maps dated 1934 and 1956. These maps are collected at the Science Library of the University of California, Riverside, and the California Desert District of the U.S. Bureau of Land Management, located in Moreno Valley.

NATIVE AMERICAN PARTICIPATION

On June 14, 2011, CRM TECH submitted a written request to the State of California's Native American Heritage Commission for a records search in the commission's sacred lands file. Following the commission's recommendations, CRM TECH further contacted a total of 12 Native American representatives in the region both in writing and by telephone between July 18 and August 17 to solicit local Native American input regarding potential cultural resources concerns over the proposed undertaking. The correspondences between CRM TECH and the Native American representatives are attached to this report as Appendix 2.

FIELD SURVEY

CRM TECH archaeologists Daniel Ballester and Robert Porter (see App. 1 for qualifications) carried out the field survey of the APE on July 9, August 24, and November 10, 2011. The alignment of the existing sewer line, located mostly in the Mojave River channel, was surveyed on foot from the riverbanks. Where the proposed pipeline routes traversed open areas, they were also surveyed on foot by walking two parallel transects along both sides of the project centerline, effectively covering a total width of 100 feet at an intensive level.

The proposed construction staging areas were surveyed on foot along parallel north-south or east-west transects spaced 15 meters (approximately 50 feet) apart. The portions of the APE within the rights-of-way of paved roads have been extensively disturbed and

demonstrate a reduced archaeological sensitivity. Therefore, they were surveyed at a reconnaissance level by driving along the project routes and visually inspecting the surrounding ground surface for any indications of potential cultural resources.

Using these methods, the ground surface in the entire APE was systematically and carefully examined for any evidence of human activities dating to the prehistoric or historic periods (i.e., 50 years ago or older). Visibility of the native ground surface was essentially 0% in the paved areas, but was fair to good (50-85%) elsewhere in the APE, depending on the density of vegetation.

RESULTS AND FINDINGS

PREVIOUS CULTURAL RESOURCES STUDIES IN THE VICINITY

According to AIC records, most of the APE was included in various cultural resources studies completed in the past, but the APE as a whole had not been surveyed systematically prior to this study. In all, AIC records show some 37 previous studies on various tracts of land and linear features within a one-mile radius of the APE (Fig. 4). Several of the studies near the Mojave River channel recommended monitoring of earth-moving activities due to Native American cultural resources previously discovered nearby on the ground surface and in subsurface deposits (Farrell 1976:1; Maxon 1999:11; McKenna 2006:18)

As a result of the previous studies in the vicinity, a total of 45 historical/archaeological resources, including seven isolates—i.e., localities with fewer than three artifacts—and five "pending" sites, have been identified within the one-mile radius (see App. 3). Of these, 16 of the sites, one of the pending sites, and all of the isolates were prehistoric—i.e., Native American—in origin (see App. 4 for locations). Among them were several sites that were recorded as habitation areas. The other sites and pending sites dated to the historic period, and included refuse scatters, residential and commercial buildings, linear features such as roads and power lines, and other built-environment features.

Eight of the previously identified sites were recorded partially within the current APE, as listed below:

Site No.	Description
36-000060	Prehistoric habitation site
36-000063	Prehistoric habitation site, encompassing 36-000064
36-000968	Native American burial site
36-002910	Former U.S. Route 66/National Old Trails Highway
36-003033	Mojave Trail
36-006793	Atchison, Topeka and Santa Fe Railway
36-013879	Prehistoric habitation site, encompassing 36-000058, 36-000059, and part of 36-000060
36-014171	Rainbow Bridge

Among the eight sites listed above, 36-000060, 36-002910, and 36-006793 were previously found to be eligible for the National Register of Historic Places (see further discussion

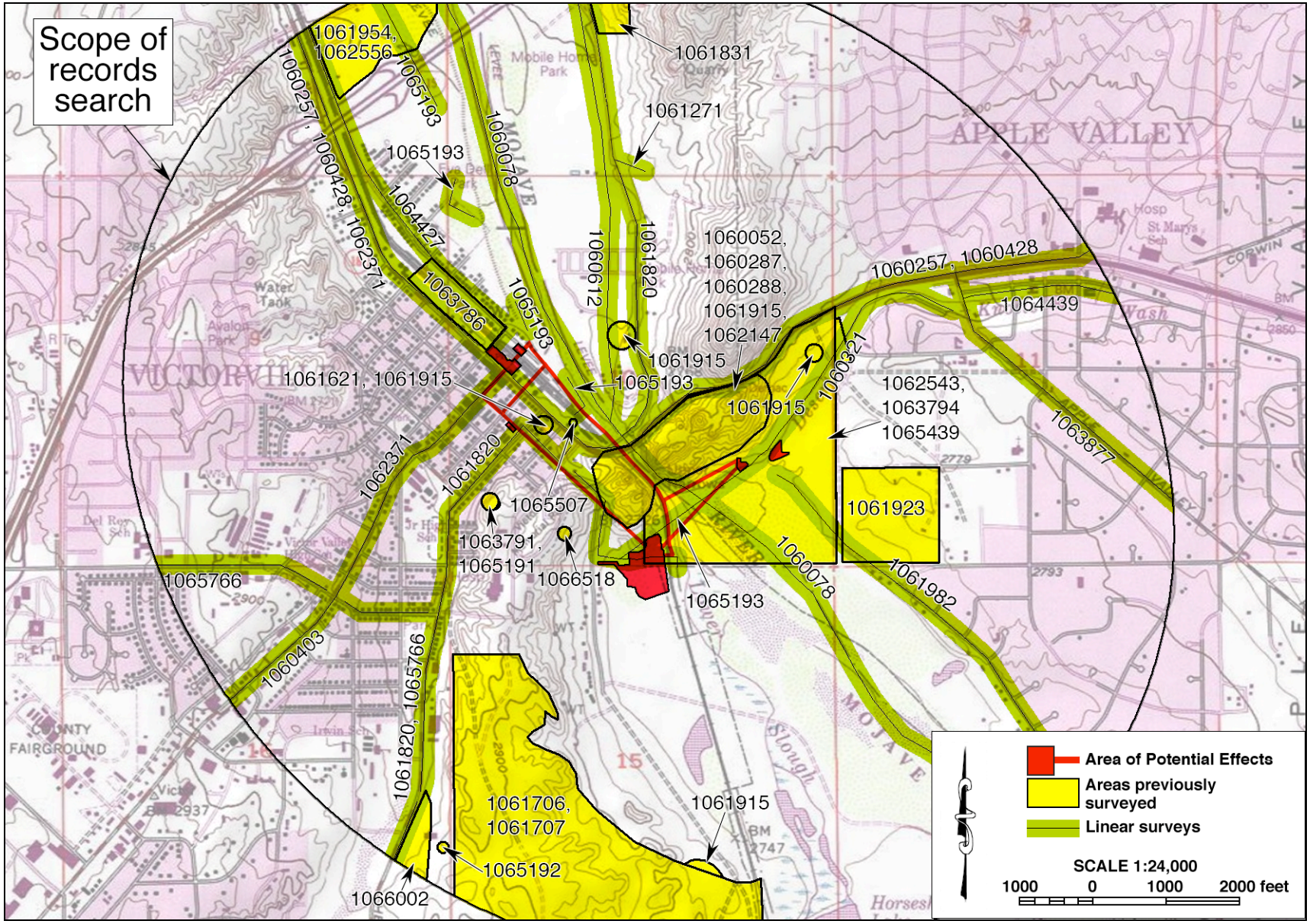

Figure 4. Previous cultural resources studies in the vicinity of the APE, listed by AIC file number.

below), and 36-003033 has been designated California Historical Landmark No. 963. None of the other sites, pending sites, or isolates was located within or adjacent to the APE, and thus none of them requires further consideration during this study. One of these, an isolates designated 36-012837, is shown to be in close proximity to the APE on the AIC's site location maps (App. 4), but was determined to be outside the APE upon closer examination of existing documentation and upon subsequent field inspection.

It is worth noting that more than half of the 45 cultural resources found within the scope of the records search were prehistoric in origin, and most of those were clustered along the banks of the Mojave River (see App. 4). The spatial distribution of the prehistoric sites in and near the APE is clearly related to the topography, with the majority found at higher elevations near, but outside, the riverbed. The relative concentration of prehistoric features and artifacts around the Upper Narrows certainly renders the APE an area of heightened archaeological interest.

In general, other prehistoric sites found within a five-mile radius of the APE were similar to those discussed above and typically occurred in the same or a similar geomorphologic context. Their presence supports existing prehistoric settlement-subsistence models for inland California, which postulates that longer-term residential settlement in this region tended to be concentrated on elevated ridges or terraces along natural waterways, while the arid valley floor was more often used for resource procurement, travel, and opportunistic camping.

GEOARCHAEOLOGICAL PROFILE

Based on geologic maps by Dibblee (1967; 2008), the APE contains areas of active Mojave River sediments and granitic bedrock, distributed from the riverbed to the crest of the ridge, which have a low potential to contain buried archaeological materials. Terraced areas that were less subjected to flooding have a significantly higher sensitivity for such deposits. Although elevations across the APE range only from approximately 2,710 feet to 2,800 feet above mean sea level, the variance is sufficient to delineate different levels of archaeological sensitivity, which is supported by the records search results discussed above.

However, some of the terrace areas, particularly in the western portion of the APE, have undergone urban development, resulting in a highly disturbed ground surface and, consequently, diminished potential for archaeological remains to survive intact. Additionally, deeper sediments, generally beyond ten feet in depth, are estimated to be as much as 10,000 years old, by far predating the proliferation of Native American settlements in the Victor Valley. These early sediments, understandably, are unlikely to yield Native American cultural resources.

HISTORICAL OVERVIEW OF THE APE

Historical sources consulted for this study suggest that settlement and land development activities began in earnest around the APE only after the ATSF Railway led to the birth of the town of Victorville. Prior to that, when the U.S. government conducted the first systematic land surveys in the Victor Valley during the 1850s, no man-made features of any kind, either Native American or European in nature, were reported in or near the APE (Fig.

5). As previously noted, the ATSF Railway arrived in 1885, triggering an influx of settlers to the Victor Valley that reached a peak in the 1910s. By the 1930s, the core area of downtown Victorville, which encompasses the northwestern end of the APE, had been established at a nexus for an extensive web of paved and unpaved roads that crisscrossed the Mojave Desert, Highway 18 among them (Fig. 6).

Twenty years later, amid the post-WWII boom that swept across the U.S., more than 20 buildings, including some large ones presumably used for industrial or commercial purposes, were found along the northwestern portion of the APE (Fig. 7). Elsewhere, in contrast, no buildings were noted in or near the APE during the historic period, and the ATSF Railway, a Union Pacific Railway line completed in the early 20th century, and the various roads were the only cultural features observed nearby (Fig. 6, 7).

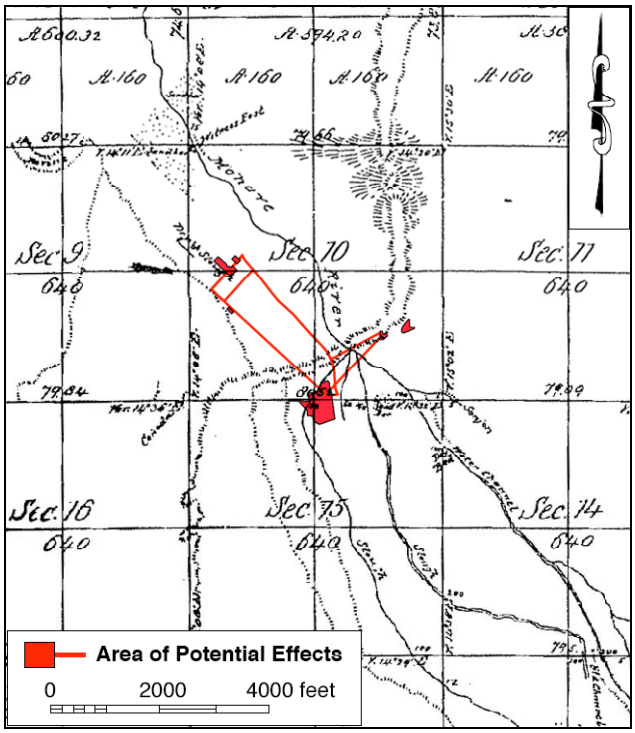

Figure 5. The APE and vicinity in 1853-1855. (Source: GLO 1856a)

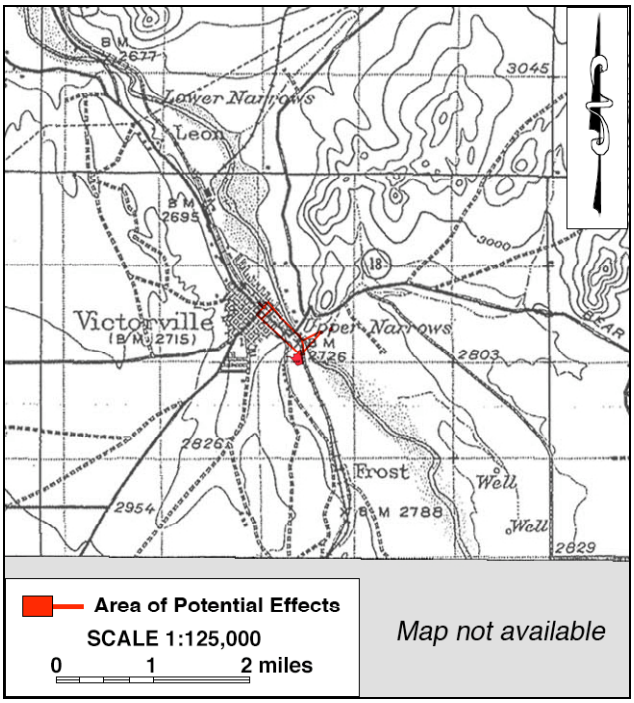

Figure 6. The APE and vicinity in 1920-1932. (Source: USGS 1934)

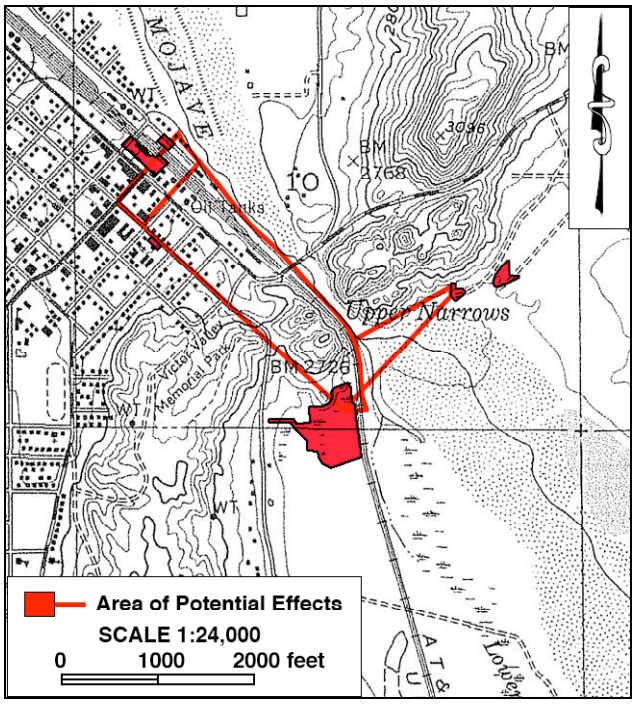

Figure 7. The APE and vicinity in 1952-1956. (Source: USGS 1956)

NATIVE AMERICAN INPUT

In response to CRM TECH's inquiry, the Native American Heritage Commission reported in a letter dated June 16, 2011, that the sacred lands record search identified no Native American cultural resources within the APE, but recommends that local Native American groups be contacted for further information. For that purpose, the commission provided a list of potential contacts in the region (see App. 2).

Upon receiving the commission's response, CRM TECH initiated correspondence with all ten individuals on the referral list and the organizations they represent. In addition, John Gomez, Jr., Cultural Resources Coordinator for the Ramona Band of Cahuilla Indians, and Mark Cochrane, Tribal Council member at the Serrano Nation of Mission Indians, were also contacted. To date, six verbal responses have been received (see App. 2).

In their telephone responses, Goldie Walker, Chairperson of the Serrano Nation of Mission Indians, John Valenzuela, Chairman of the San Fernando Band of Mission Indians, Linda Otero, Director of the AhaMaKav Cultural Society at the Fort Mojave Indian Tribe, and Mark Cochrane each stated that the APE was sensitive for Native American cultural resources due to its location along the Mojave River, a major water source and critical part of ancestral Native life.

Specifically, Mr. Cochrane and Ms. Walker requested notification of any archaeological findings during the undertaking and examination of such findings by a qualified archaeologist. In addition, Ms. Walker emphasized the importance of following proper procedures, particularly if human remains are encountered. Mr. Valenzuela also requested notification of any archaeological findings, and recommended that a Native American monitor from his tribe be present during ground-disturbing activities where the native soils were undisturbed or where other discoveries had been made in the past.

Ms. Otero stated that although existing sewer lines were already in place, she was opposed to having sewer lines in the immediate vicinity of the river. According to current project plans, as mentioned above, the existing sewer line within the river will be abandoned in place with the new replacement sewer line removed from the riverbed as much as possible.

Ernest Siva, tribal elder with the Morongo Band of Mission Indians, stated that he had no comment regarding this undertaking. John Gomez, Jr., of the Ramona Band of Cahuilla Indians indicated that his tribe would defer to the San Manuel Band of Serrano Mission Indians. At this time, representatives of the San Manuel Band had not responded to the request for comments.

POTENTIAL HISTORIC PROPERTIES IN THE APE

As stated above, a total of eight historical/archaeological sites were previously recorded as lying partially within the APE, including four prehistoric sites, one of them a burial, and four sites that dated to the historic era. During the field survey, additional features and artifacts associated with two of the four prehistoric sites, 36-000063 and 36-013879, were recorded in the APE. These eight sites are discussed in further detail below.

While several of the buildings along the proposed pipeline alignments within C, Seventh, and Eighth Streets appear to be historical in origin, none of them is located within or

immediately adjacent to the APE, and the proposed undertaking, entailing only subsurface trenching and pipeline installation at these locations, has no potential to affect the appearance and integrity of these buildings, either directly or indirectly. Therefore, no further consideration is deemed necessary for any of the buildings near the APE.

Site 36-000060 (Prehistoric Habitation Site)

The southwestern end of Site 36-000060 lies across the APE where the existing sewer line will be abandoned as part of the proposed undertaking (see App. 4). When first recorded in 1949, Site 36-000060 consisted of a bedrock metate and a surface scatter of artifacts, including a scraper, a portable metate, quartzite flakes, and some mussel shells, found among granite boulders some 200 feet west of the Mojave River (Mohr and Bierman 1949c). In 1965, "Indian writings" on a boulder and part of a basket were found about 400 feet away and recorded as part of the site (Smith 1965). Other findings in the ensuing years, including metate fragments, a campsite, bedrock mortars and slicks, a rock shelter, and petroglyphs, expanded the site to ten loci over an area of approximately 40 acres by 1969, at which time the site was considered a candidate for listing in the National Register of Historic Places (Bowers 1969a:1).

A visit to the site in 1976 located a previously reported campsite with fire-affected rock and burned bone, some bedrock milling features, and rock shelters, but in 1992 all that was located of 36-000060 was a "possible panel of rock art" that did not match a previous description (Anonymous 1976:1; McKenna 1992a:1). In 2007, a small portion of the site on the southeastern edge was incorporated into another prehistoric habitation site, 36-013879 (McDougall 2007:1; see below). During the present field survey, no physical evidence of 36-000060 was found in or near the APE. Since no ground disturbances are planned at this location, the proposed undertaking has no potential to affect the condition or integrity of 36-000060, either directly or indirectly.

Site 36-000063 (Prehistoric Habitation Site)

Site 36-000063 lies across a segment of the tunneling route and on the northern edge of the southernmost staging area (see App. 4). Originally recorded in 1941 as a few faint petroglyphs of lizards on granite boulders on the western bank of the Mojave River (Smith 1941), 36-000063 eventually expanded to include a series of petroglyphs found in nearby shelters, caves, and on boulders, along with bedrock milling features, hearths, midden desposits, portable metates, hammerstones, projectile points, pottery sherds, debitage, and other artifacts (Mohr 1949; Haenszel 1964; Bowers 1969b n.p.). These locations were collectively described as an "Indian camp" in 1969 and deemed a candidate for listing in the National Register of Historic Place (Bowers 1969b n.p.).

After revisiting the site in 1976, Haenszel (1976:1) reported that it "has really taken a beating over the years," citing spray-painted graffiti and a layer of hardened cement dust from two local cement plants. Another site visit in 1992 found "at least ten identified loci, including habitation sites, rock art sites, multi-use sites, and trails" (McKenna 1992b:1). According to the 1992 site record update, the perimeters of 36-000063 encompassed another rock art site that had been designated 36-000064 (*ibid.*:3; McKenna 1992c:3). A closer examination of the existing documentation revealed that, in fact, 36-000063 and 36-000064

were designated on the basis of the same petroglyphs recorded in 1941 and 1964 (Smith 1941; Haenszel 1964).

By 1992, the area around 36-000063 was apparently used for picnicking and camping, with the site marred by scattered trash, graffiti, and other evidence of vandalism, including damages from gun shots (McKenna 1992b:2). In 1997, the site was determined ineligible for National Register listing by the State of California Office of Historic Preservation (Laska 2011).

During the field survey, two bedrock mortars and a grinding slick were found on boulders lying within the boundaries of Site 36-000063. In addition, a mano fragment, a quartz flake, a possible pestle, and a small scatter of faunal remains were also noted within the site boundaries. Field recording procedures were performed on these features and artifacts, producing GPS locational data, photo-recordation, and scaled drawings. The compiled information was submitted to the AIC as an update to 36-000063. The new findings indicate that 36-000063 is still at least partially present in the vicinity of the APE.

At the location of 36-000063, the proposed undertaking consists of tunneling at the depth of 20-40 feet below the ground surface, well below any reasonable expectation for archaeological deposits to exist, and equipment storage in a portion of the site where no surface features or artifacts were observed. Therefore, the undertaking has little potential to affect the condition or integrity of 36-000063.

Site 36-000968 (Native American Burial Site)

Site 36-000968 is located near the intersection of C Street and Tenth Street in a portion of the APE slated for tunneling as part of the undertaking (see App. 4). This small site was described in 1971 as an "isolated burial unearthed by sewer excavation" (Anonymous 1971). No further information was recorded about the site or the discovery, but it was speculated that the burial might have been associated with "a small group of 'Paiute' Indians [who] lived on the hillside on Tenth Street between C and D Streets" from circa 1890 to 1930, with one woman apparently remaining at that location until the late 1950s (Blomberg 1986).

The existing site record states that the site is not eligible for listing in the National Register of Historic Places, although no further information or analysis was provided in support of that statement (Anonymous 1971). During the field survey, no features or artifacts associated with the site were noted on the ground surface. Since the undertaking at this location will occur in a tunnel at the depth of 20-40 feet, this shallow subsurface site essentially lies outside the vertical extent of the APE. Nevertheless, due to the recorded discovery of Native American human remains and the presence of a reported historic-period Native American settlement nearby, the segments of the proposed pipeline rights-of-way across and near 36-000968 must be considered sensitive for possible subsurface archaeological deposits.

Site 36-002910 (National Old Trails Highway)

Site 36-002910 represents the alignment of the former U.S. Route 66, also known as the National Old Trails Highway, which coincides with the Seventh Street alternative of the proposed pipeline route at the northwestern end of the APE (Fig. 8). As documented

extensively in the past, Route 66 was one of the main arteries of the National Highway System of 1926, but its existence in California as an automobile highway dated at least to 1907 (Scott and Kelly 1988:3; Casebier 1989:148-149). During the Great Depression, Route 66 became famous as the favored path among migrants seeking new opportunities in California. By 1934, the entire length of Route 66 within California had been paved into a hard-surface modern highway (Scott and Kelly 1988:31).

Figure 8. Current condition of Site 36-002910 along the APE. (View to the northeast along Seventh Street; photo taken on August 24, 2011.

With the development of the new interstate highway system since the 1950s, Route 66 gradually lost its status as a national transportation artery. Today, it is no longer a designated U.S. highway, and various segments of the route have been abandoned, taken over by interstate freeways, or decommissioned and renamed within the various municipalities it traversed. Nevertheless, the old U.S. Route 66 has gained legendary status in American popular culture as a symbol of the early heyday of the automobile age as well as an era in 20th century American history. It has been determined eligible for listing in the National Register of Historic Places and subsequently listed in the California Register of Historical Resources (OHP 2000:140).

The segment of Site 36-002910 in the APE is a part of Seventh Street across downtown Victorville, which is a well-traveled local thoroughfare (Fig. 8). Like the numerous other components of the historical transportation infrastructure that remain in service today, the street has been repeatedly upgraded and regularly maintained. As a result, it demonstrates no distinctive historical characteristics.

Site 36-003033 (Mojave Trail)

Site 36-003033 represents the former route of the Mojave Trail, an important desert trail that linked southern California with "points east" during the early historic period (OHP 1990:182). According to AIC records, the trail traversed along the Mojave River and crossed the APE near the Upper Narrows. However, historic maps from the 1850s show the trail to have followed a generally northeast-southwest course several miles west of the APE (GLO 1856b). During the field survey, no physical evidence of the site was found in or near the APE.

Because of its far-reaching influence in the early settlement and subsequent development of southern California, the Mojave Trail was designated as California Historic Landmark No. 963 in 1986 (OHP 1986:11). Along most of its former course, nevertheless, no physical features of this site survive today, and its historic value now is largely symbolic in nature, conserved mainly in historic maps and commemorated by a site marker placed near Interstate 15, northeast of Barstow (OHP 1990:182). Within the APE, Site 36-003033 no longer maintains a physical presence.

Site 36-006793 (ATSF Railway)

Site 36-0006793 represents the ATSF line across the Victor Valley, which was constructed in the mid-1880s. It runs parallel to the northwestern segment of the existing sewer line and crosses the proposed sewer line right-of-way at the northwestern and the southern ends of the APE. Because of the important role it played in bringing to an end the transportation monopoly that the Southern Pacific Railway Company had enjoyed in California and in stimulating the phenomenal growth of southern California in the 1880s, the ATSF Railway was previously determined eligible for listing in the National Register of Historic Places in 1998 (OHP 2000:145).

Today, the former ATSF line remains fully functional as a part of the Burlington Northern Santa Fe Railway system, and its physical components have been repeatedly replaced and upgraded to maintain functionality over the years. Consequently the existing rail line retains few physical characteristics—other than the location itself—that would relate distinctively to the site's period of significance, namely the late 19th century. Where it crosses the APE, the undertaking will be completed underground by the jack-and-bore method at both the southern end and the northwestern end. Therefore, Site 36-006793 is not situated within the vertical extent of the APE.

Site 36-013879 (Prehistoric Habitation Site)

In 2007, Site 36-000058, Site 36-000059, and a portion of Site 36-000060, along with seven other localities identified nearby, were combined into a new site designated 36-013879 (McDougall 2007:1). Sites 36-000058, 36-000059, and 36-000060 were all initially recorded in 1949 (Mohr and Bierman 1949a-c). Site 36-000058 was described as a surface scatter of lithic artifacts located about a quarter-mile east of the Mojave River, composed of a mano, mano fragments, two scrapers, an apparently painted pebble with ground edges, a hammerstone, quartzite and chalcedony flakes, and fire-cracked rock (Mohr and Bierman 1949a). Site 36-000059, a habitation site located about 500 feet northwest of 36-000058, was recorded as a group of seven bedrock milling features with a mano, mano fragments, and some quartzite flakes (Mohr and Bierman 1949b).

Site 36-000060 was originally recorded approximately 300 feet northwest of 36-000058 (Mohr and Bierman 1949c). As mentioned above, the site was later expanded significantly, but only a small portion of it along the southeastern edge was incorporated into 36-013879. As re-designated in 2007, Site 36-013879 contained a variety of features and artifacts, including fire hearths, probable cremation remains, lithic scatters, bedrock milling features, cairns and other rock features, fire-affected rock, and habitation debris (McDougall 2007:3). Site 36-000060 was previously determined eligible for listing in the National Register, but Site 36-013879, as a whole, has not been evaluated for significance.

As delineated in 2007, Site 36-013879 encompasses the easternmost staging area and several dozen feet of the proposed pipeline alignment at the northeastern end of the APE, while a second staging area is located adjacent to the southern boundary of the site (see App. 4). During the field survey, a small number of groundstone and chipped stone artifacts were found on the ground surface within the site boundary but a short distance outside the APE, including a metate fragment, a bowl or mortar fragment, a quartzite core, and four lithic flakes (Fig. 9).

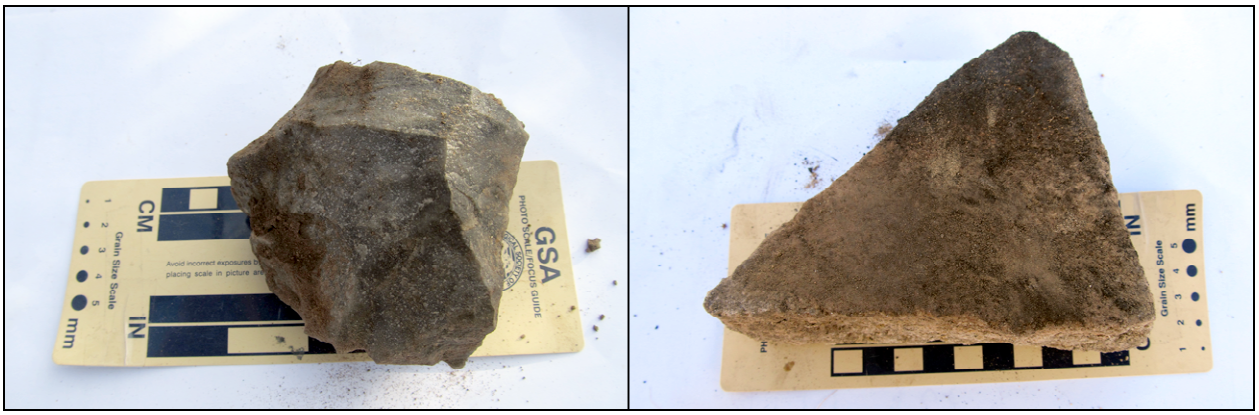

Figure 9. Artifacts found at Site 36-013879. *Left*: quartzite core; *right*: metate fragment.

Since trenching is proposed for the segment of the pipeline alignment extending into the site boundary, the undertaking will inevitably cause a physical impact on a small portion of the site. At the staging area within the site boundary, however, the ground surface has been extensively disturbed in the past, and no surface artifacts or features were observed. Since no subsurface ground disturbances are anticipated at that location, the undertaking is unlikely to impact any cultural remains in that portion of the site.

Site 36-014171 (Rainbow Bridge)

Site 36-014171, known as the Rainbow Bridge, was recorded in 1988 as "a metal span bridge, stone block base with concrete anchor ends, arch type," reportedly built in 1962 over the Mojave River to access a lime plant (Neuenschwander and Miller 1988:1). The span of the bridge crosses the existing sewer line overhead, and no other components of the site are found within or adjacent to the footprint of the undertaking. In other words, no elements of Site 36-014171 are actually situated within the horizontal and vertical extents of the APE. Furthermore, the undertaking at that location entails only the abandonment of the existing sewer line, and no physical, visual, atmospheric, aesthetic, or other effect is anticipated on the bridge. Therefore, Site 36-014171 requires no further consideration during this study.

MANAGEMENT CONSIDERATIONS

REGULATORY GUIDELINES

The purpose of this study is to identify and evaluate any "historic properties" that may exist within or adjacent to the APE. "Historic properties," as defined by 36 CFR 800.16(l)(1), include "prehistoric or historic district, site, building, structure, or object included in, or eligible for inclusion in, the National Register of Historic Places maintained by the Secretary of the Interior." The eligibility for inclusion in the National Register is determined by applying the following criteria, pursuant to 36 CFR 60.4:

> The quality of significance in American history, architecture, archaeology, engineering, and culture is present in districts, sites, buildings, structures, and objects that possess integrity of location, design, setting, materials, workmanship, feeling, and association and

(a) that are associated with events that have made a significant contribution to the broad patterns of our history; or
(b) that are associated with the lives of persons significant in our past; or
(c) that embody the distinctive characteristics of a type, period, or method of construction, or that represent the work of a master, or that possess high artistic values, or that represent a significant and distinguishable entity whose components may lack individual distinction; or
(d) that have yielded, or may be likely to yield, information important in prehistory or history.

DISCUSSION

As the result of the research procedures completed during this study, eight previously recorded historical/archaeological sites were found to be located partially within the APE, including four prehistoric sites, three linear features of historical origin, and a bridge, as listed below:

Site No.	**Description**
36-000060	Prehistoric habitation site
36-000063	Prehistoric habitation site
36-000968	Native American burial site
36-002910	Former U.S. Route 66/National Old Trails Highway
36-003033	Mojave Trail
36-006793	Atchison, Topeka and Santa Fe Railway
36-013879	Prehistoric habitation site
36-014171	Rainbow Bridge

During the field survey, three bedrock milling features and a few lithic and faunal artifacts were recorded within the previously established boundary of Site 36-000063, while several groundstone and chipped-stone artifacts were found near—but outside—the APE at Site 36-013879. No features or artifacts associated with the other two prehistoric sites were observed within the APE, and no physical remains were found of 36-003033, the historic Mojave Trail. The other three historic-period sites, 36-002910 (Route 66), 36-006793 (ATSF Railway), and 36-014171 (Rainbow Bridge), were confirmed to be present at their recorded locations and in use as parts of the modern transportation system.

As currently proposed, much of the undertaking will be carried out through underground tunneling and horizontal directional drilling at depths well below the surface cultural features and the known subsurface archaeological deposits, while the portion of the undertaking along the existing sewer line consists only of the abandonment of the damaged pipeline. In light of their locations outside the vertical extent of the APE or in areas where no ground disturbance or construction will occur, it is determined that the undertaking has no potential to affect the significance or integrity of five of the eight sites listed above, namely 36-000060, 36-000968, 36-003033, 36-006793, and 36-014171.

At Site 36-000063, the proposed undertaking consists of tunneling at depths well below any reasonable expectation for archaeological deposits and equipment storage in a portion of the site where no surface features or artifacts were observed. As such, it has little potential to impact the condition of the site. Furthermore, the site was previously determined by the

State of California Office of Historic Preservation not to be eligible for listing in the National Register of Historic Places. Therefore, Site 36-000063 does not meet the definition of a "historic property" under Section 106.

Site 36-002910 represents a famed old highway that has been determined to qualify as a "historic property." Current project plans call for trenching along a small segment of the site near the northwestern end of the APE for the installation of the replacement pipeline if the Seventh Street alternative is selected. Although the historic value and legendary status of Route 66 are well documented, the physical manifestation of the site is now a modern highway under constant use, and its appearance reflects much more the results of repeated upgrading and maintenance in recent decades than the heyday of "the Mother Road." As working elements of the modern infrastructure, the physical components of the site in the APE do not contribute to its significance or integrity. Therefore, 36-002910 will not be adversely affected by the undertaking.

The final site, 36-013879, is a large prehistoric habitation site that encompasses one of the six staging areas and a short segment of the proposed pipeline alignment, where no cultural remains associated with the site were observed on the ground surface. As mentioned above, trenching is proposed for the installation of this segment of the pipeline, but no subsurface ground disturbances are anticipated at the staging area. As such, the undertaking may cause a physical impact on the portion of the site along the pipeline alignment, but not on the balance of the site.

At this time, the qualification of Site 36-013879 as a "historic property" is yet to be ascertained. While the evaluation of 36-013879 in its entirety is well beyond the scope of statutory compliance for this undertaking, the anticipated impact necessitates a determination on whether the portion of the site to be affected contains important archaeological information in subsurface deposits and thus contributes to the potential significance of the site as a whole. Due to the lack of sufficient data, that determination cannot be made without further archaeological investigations, including subsurface excavations, as outlined in the section below.

In summary, among the eight known historical/archaeological sites lying partially in the APE, only 36-013879 may constitute a "historic property" that could be affected by the implementation of the proposed undertaking. However, the presence of the known prehistoric sites in a relatively concentrated cluster in and near the APE, including several with buried components, suggests a heightened probability for similar cultural remains to be encountered in subsurface deposits at elevations above the Mojave River bed. Representatives of local Native American groups have also expressed concerns over archaeological remains in the APE due to its location on the Mojave River. Furthermore, the geomorphologic profile of the area indicates that conditions conducive to long-term prehistoric habitation exist in the APE, and the records search reveals that prehistoric sites have been reported in the surrounding area in the same or a similar geomorphologic context as the APE.

The deeper sediments within the APE, generally beyond ten feet below the ground surface, are estimated to be as much as 10,000 years old, by far predating the proliferation of Native American settlements in the Victor Valley, and are therefore unlikely to yield archaeological deposits. Meanwhile, the surface soils within the paved roadways in the

APE, generally to the depth of five feet, consist of roadbed fill, where the likelihood of encountering any potentially significant archaeological remains has been greatly reduced by extensive past disturbances. The sediments between five and ten feet in depth within the roadways and the top ten feet of sediments elsewhere in the APE, therefore, should be considered sensitive for buried archaeological deposits of prehistoric origin.

CONCLUSION AND RECOMMENDATIONS

Section 106 of the National Historic Preservation Act and associated regulations require that federal agencies take into account the effects of their undertakings on historic properties, and afford the Advisory Council on Historic Preservation a reasonable opportunity to comment. The goal of this consultation process is to seek ways to avoid, minimize, or mitigate any adverse effects on such properties (36 CFR 800.1(a)).

In summary of the research results outlined above, this study concludes that one potential "historic property," namely Site 36-013879, may be affected by the proposed undertaking, but a final determination of the qualification of the site as a "historic property" under Section 106 cannot be made on the basis of existing data. In addition, the APE appears to be sensitive for subsurface deposits of prehistoric cultural remains, some of which may also potentially qualify as "historic properties." Based on these findings, CRM TECH presents to FEMA and other interested consulting parties the following recommendations regarding the proposed undertaking:

- Trenching operations within or adjacent to the boundary of Site 36-013879 should be accomplished through controlled excavations under the direction and close observation of a qualified archaeologist in order to ascertain the presence or absence of potentially significant subsurface cultural remains in that portion of the site. Given its location within the Desert Knolls Wash, hand-excavation of standard archaeological units is not unlikely to be productive. However, if a substantial archaeological deposit is encountered, the mechanical excavations should be halted or diverted while an archaeological team recovers the materials through procedures consistent to a standard archaeological testing program. The ultimate goal of these procedures is to assess the archaeological data potential of the portion of Site 36-013879 to be affected by the undertaking, and thereby determine its eligibility as a "historic property."
- In order to prevent inadvertent effects on other portions of Site 36-013879 by heavy equipment maneuvers, the staging areas within and adjacent to the site boundary should be capped with imported soil to the depth of at least one foot, thereby preserving all archaeological deposits underground. The surface artifacts found during this study should be collected prior to the commencement of the undertaking, and disturbances to the existing ground surface within the site boundary should be prohibited.
- In order to properly identify, evaluate and, if necessary, protect previously undetected subsurface cultural deposits elsewhere, an archaeological monitoring program, including monitoring by representatives of local Native American groups, should be implemented during open trench and pit excavations within the top ten feet of sediments except along the paved roadways, where monitoring should commence upon reaching native soils beyond the roadbed fill, generally five feet in depth.
- Horizontal directional drilling, tunnel excavation, and bore-and-jack operations cannot be effectively monitored, but the back dirt from these activities within the

archaeologically sensitive sediments should be examined periodically by a qualified archaeologist. If any potentially significant cultural remains are discovered, controlled excavation under the direction of an archaeologist may be necessary at that location, if feasible.

- In the unlikely event that cultural materials are encountered within sediments that do not require monitoring, all work in that area should be halted or diverted until a qualified archaeologist can evaluate the nature and significance of the finds.

Under these conditions, the proposed undertaking may be cleared to proceed in compliance with Section 106 regulations.

REFERENCES

Anonymous

1971 California Historical Resource Information System site record, 36-000968. On file, Archaeological Information Center, San Bernardino County Museum, Redlands.

1976 California Historical Resource Information System site record update, 36-000060.

Bean, Lowell John, and Charles R. Smith

1978 Serrano. In Robert F. Heizer (ed.): *Handbook of North American Indians*, Vol. 8: *California*; pp. 570-574. Smithsonian Institution, Washington, D.C.

Blomberg, Nancy J.

1986 Letter to Lester Ross, Coordinator, Archaeological Information Center; April 18. On file (under Site 36-000968), Archaeological Information Center, San Bernardino County Museum, Redlands.

Bowers, G.

1969a California Historical Resource Information System site record update, 36-000060. On file, Archaeological Information Center, San Bernardino County Museum, Redlands.

1969b California Historical Resource Information System site record update, 36-000063. On file, Archaeological Information Center, San Bernardino County Museum, Redlands.

Casebier, Dennis

1989 *Guide to the East Mojave Heritage Trail—Rocky Ridge to Fenner*. Tales of the Mojave Road Publishing Company, Norco, California.

Coombs, Gary B., Richard McCarty, Tara Shepperson, and Sharon Dean

1997 *The Archaeology of the Western Mojave*. Bureau of Land Management Cultural Resources Publications in Archaeology. U.S. Bureau of Land Management, California Desert District, Riverside.

Dibblee, Thomas W., Jr.

1967 *Geology of the Western Mojave Desert, California*. U.S. Geological Survey Professional Paper 522. Washington, D.C.

2008 Geologic Map of the Shadow Mountains and Victorville Quadrangles, San Bernardino County, California (1:62,500). Dibblee Geology Center Map Series. Santa Barbara, California.

Farrell, Nancy

1976 Archaeological-Historical Resources Assessment of Zone 4—Desert Knolls Wash, Work Order F00637, Feature J8, Budget Unit 010, Fund 694, Cost Ctr. 11. NADB No. 1060321. On file, Archaeological Information Center, San Bernardino County Museum, Redlands.

GLO (General Land Office, U.S. Department of the Interior)

1856a Plat Map: Township No. 5 North Range No. 4 West, San Bernardino Meridian; surveyed in 1853-1855.

1856b Plat Map: Township No. 5 North Range No. 5 West, San Bernardino Meridian; surveyed in 1853-1855.

Haenszel, Arda

1964 California Historical Resource Information System site record update, 36-000063/36-000064. On file, Archaeological Information Center, San Bernardino County Museum, Redlands.

1976 California Historical Resource Information System site record update, 36-000063. On file, Archaeological Information Center, San Bernardino County Museum, Redlands.

Harms, Nancy S.
1996 *A Precollegiate Teachers Guide to California Geomorphic/Physiographic Provinces*. Far West Section, National Association of Geoscience Teachers, Concord, California.
Jenkins, Olaf P.
1980 Geomorphic Provinces Map of California. *California Geology* 32(2):40-41. California Division of Mines and Geology, Sacramento.
Kroeber, Alfred L.
1925 *Handbook of the Indians of California*. Bureau of American Ethnology Bulletin 78. U.S. Government Printing Office, Washington, D.C.
Laska, Robin (Coordinator, Archaeological Information Center)
2011 Personal communication by e-mail; August 16.
Maxon, Patrick O.
1999 Cultural Resources Reconnaissance of a Six Acre Parcel for the High Desert Partnership in Academic Excellence Foundation, Apple Valley, California. NADB No. 1063794. On file, Archaeological Information Center, San Bernardino County Museum, Redlands.
McDougall, D.
2007 California Historical Resource Information System site record, 36-013879. On file, Archaeological Information Center, San Bernardino County Museum, Redlands.
McKenna, Jeanette
1992a California Historical Resource Information System site record update, 36-000060. On file, Archaeological Information Center, San Bernardino County Museum, Redlands.
1992b California Historical Resource Information System site record update, 36-000063. On file, Archaeological Information Center, San Bernardino County Museum, Redlands.
1992c California Historical Resource Information System site record update, 36-000064. On file, Archaeological Information Center, San Bernardino County Museum, Redlands.
2006 Results of a Phase I Cultural Resources Investigation for the Proposed Lewis Center Athletic Fields and Parking Area on Land Adjacent to the Existing Facilities in Apple Valley, San Bernardino County, California. NADB No. 1065439. On file, Archaeological Information Center, San Bernardino County Museum, Redlands.
Meisling, K. E., and R. J. Weldon
1989 Late Cenozoic Tectonics of the Northwestern San Bernardino Mountains of Southern California. *Geological Society of America Bulletin* 101:106-128.
Mohr (first name unknown)
1949 California Historical Resource Information System site record, 36-000063. On file, Archaeological Information Center, San Bernardino County Museum, Redlands.
Mohr and Bierman (first names unknown)
1949a California Historical Resource Information System site record, 36-000058. On file, Archaeological Information Center, San Bernardino County Museum, Redlands.
1949b California Historical Resource Information System site record, 36-000059. On file, Archaeological Information Center, San Bernardino County Museum, Redlands.
1949c California Historical Resource Information System site record, 36-000060. On file, Archaeological Information Center, San Bernardino County Museum, Redlands.
Neuenschwander, N., and J. Miller
1988 California Historical Resource Information System site record, 36-014171. On file, Archaeological Information Center, San Bernardino County Museum, Redlands.
OHP (Office of Historic Preservation, State of California)
1986 Minutes, State Historical Resources Commission, November 7. On file, California Department of Parks and Recreation, Sacramento.

1990 *California Historical Landmarks*. California Department of Parks and Recreation, Sacramento.
2000 Archaeological Determinations of Eligibility, San Bernardino County. On file, Archaeological Information Center, San Bernardino Museum, Redlands.
O'Rourke, Kate
2004 *The Story of Apple Valley*. The Lewis Center for Educational Research/Apple Valley Chamber of Commerce, Apple Valley.
Peirson, Erma
1970 *The Mojave River and Its Valley*. The Arthur H. Clarke Company, Glendale, California.
Ryon, Art
1964 *The Apple Valley Story*. Supplement to the *Los Angeles Times*.
Scott, Quinta, and Susan Croce Kelly
1988 *Route 66: The Highway and Its People*. University of Oklahoma Press, Norman.
Smith, Gerald A.
1941 California Historical Resource Information System site record, 36-000063/36-000064. On file, Archaeological Information Center, San Bernardino County Museum, Redlands.
1965 California Historical Resource Information System site record update, 36-000060. On file, Archaeological Information Center, San Bernardino County Museum, Redlands.
Strong, William Duncan
1929 *Aboriginal Society in Southern California*. University of California Publications in American Archaeology and Ethnology, Vol. 26. Reprinted by Malki Museum Press, Banning, California, 1972.
USGS (United States Geological Survey, U.S. Department of the Interior)
1934 Map: Barstow, Calif. (30', 1:125,000); surveyed in 1920 and 1932.
1956 Map: Victorville, Calif. (7.5', 1:24,000); aerial photographs taken in 1952, field-checked in 1956.
1969 Map: San Bernardino, Calif. (1:250,000); 1958 edition revised.
1993 Map: Victorville, Calif. (7.5', 1:24,000); 1956 edition photorevised in 1989.
Warren, Claude N.
1984 The Desert Region. In Michael J. Moratto (ed.): *California Archaeology*; pp. 339-430. Academic Press, Orlando, Florida.
Warren, Claude N., and Robert H. Crabtree
1986 Prehistory of the Southwestern Area. In Warren L. D'Azevedo (ed.): *Handbook of North American Indians*, Vol. 11: *Great Basin*; pp. 183-193. Smithsonian Institution, Washington, D.C.

APPENDIX 1

PERSONNEL QUALIFICATIONS

PRINCIPAL INVESTIGATOR/HISTORIAN
Bai "Tom" Tang, M.A.

Education

1988-1993	Graduate Program in Public History/Historic Preservation, University of California, Riverside.
1987	M.A., American History, Yale University, New Haven, Connecticut.
1982	B.A., History, Northwestern University, Xi'an, China.
2000	"Introduction to Section 106 Review," presented by the Advisory Council on Historic Preservation and the University of Nevada, Reno.
1994	"Assessing the Significance of Historic Archaeological Sites," presented by the Historic Preservation Program, University of Nevada, Reno.

Professional Experience

2002-	Principal Investigator, CRM TECH, Riverside/Colton, California.
1993-2002	Project Historian/Architectural Historian, CRM TECH, Riverside, California.
1993-1997	Project Historian, Greenwood and Associates, Pacific Palisades, California.
1991-1993	Project Historian, Archaeological Research Unit, U.C. Riverside.
1990	Intern Researcher, California State Office of Historic Preservation, Sacramento.
1990-1992	Teaching Assistant, History of Modern World, U.C. Riverside.
1988-1993	Research Assistant, American Social History, U.C. Riverside.
1985-1988	Research Assistant, Modern Chinese History, Yale University.
1985-1986	Teaching Assistant, Modern Chinese History, Yale University.
1982-1985	Lecturer, History, Xi'an Foreign Languages Institute, Xi'an, China.

Honors and Awards

1988-1990	University of California Graduate Fellowship, U.C. Riverside.
1985-1987	Yale University Fellowship, Yale University Graduate School.
1980, 1981	President's Honor List, Northwestern University, Xi'an, China.

Cultural Resources Management Reports

Preliminary Analyses and Recommendations Regarding California's Cultural Resources Inventory System (with Special Reference to Condition 14 of NPS 1990 Program Review Report). California State Office of Historic Preservation working paper, Sacramento, September 1990.

Numerous cultural resources management reports with the Archaeological Research Unit, Greenwood and Associates, and CRM TECH, since October 1991.

Membership

California Preservation Foundation.

PRINCIPAL INVESTIGATOR/ARCHAEOLOGIST
Michael Hogan, Ph.D., RPA*

Education

1991	Ph.D., Anthropology, University of California, Riverside.
1981	B.S., Anthropology, University of California, Riverside; with honors.
1980-1981	Education Abroad Program, Lima, Peru.

2002	Section 106—National Historic Preservation Act: Federal Law at the Local Level. UCLA Extension Course #888.
2002	"Recognizing Historic Artifacts," workshop presented by Richard Norwood, Historical Archaeologist.
2002	"Wending Your Way through the Regulatory Maze," symposium presented by the Association of Environmental Professionals.
1992	"Southern California Ceramics Workshop," presented by Jerry Schaefer.
1992	"Historic Artifact Workshop," presented by Anne Duffield-Stoll.

Professional Experience

2002-	Principal Investigator, CRM TECH, Riverside/Colton, California.
1999-2002	Project Archaeologist/Field Director, CRM TECH, Riverside.
1996-1998	Project Director and Ethnographer, Statistical Research, Inc., Redlands.
1992-1998	Assistant Research Anthropologist, University of California, Riverside
1992-1995	Project Director, Archaeological Research Unit, U.C. Riverside.
1993-1994	Adjunct Professor, Riverside Community College, Mt. San Jacinto College, U.C. Riverside, Chapman University, and San Bernardino Valley College.
1991-1992	Crew Chief, Archaeological Research Unit, U.C. Riverside.
1984-1998	Project Director, Field Director, Crew Chief, and Archaeological Technician for various southern California cultural resources management firms.

Research Interests

Cultural Resource Management, Southern Californian Archaeology, Settlement and Exchange Patterns, Specialization and Stratification, Culture Change, Native American Culture, Cultural Diversity.

Cultural Resources Management Reports

Principal investigator, author, co-author, and contributor of numerous cultural resources management study reports since 1986.

Memberships

* Register of Professional Archaeologists.
Society for American Archaeology.
Society for California Archaeology.
Pacific Coast Archaeological Society.
Coachella Valley Archaeological Society.

PROJECT ARCHAEOLOGIST/GEOLOGIST
Harry M. Quinn, M.S.

Education

1978 Certificate in Archaeology, University of California, Los Angeles.
1968 M.S., Geology, University of Southern California, Los Angeles.
1964 B.S., Geology, Long Beach State College, Long Beach.
1962 A.A., Los Angeles Harbor College, Wilmington.

- Graduate work oriented toward invertebrate paleontology; M.S. thesis completed as a stratigraphic paleontology project on the Precambrian and Lower Cambrian rocks of Eastern California.

Professional Experience

1998- Project Archaeologist/Geologist/Paleontologist, CRM TECH, Riverside/Colton, California.
1992-1998 Independent Geological/Archaeological/Environmental Consultant, Pinyon Pines, California.
1994-1996 Environmental Geologist, E.C E.S., Inc, Redlands, California.
1988-1992 Project Geologist/Director of Environmental Services, STE, San Bernardino, California.
1966-1988 Geologist/Senior Geologist, Texaco, Inc., Los Angeles; Tenneco Oil Exploration and Production, Englewood, Colorado; Loco Exploration, Inc., Aurora, Colorado; Jirsa Environmental Services, Norco, California.

Memberships

Society of Vertebrate Paleontology; American Association of Petroleum Geologists; Association of Environmental Professionals; Rocky Mountain Association of Geologists, Pacific Section; Society of Economic Paleontologists and Mineralogists; San Bernardino County Museum; Society for American Archaeology; Society for California Archaeology; Archaeological Survey Association of Southern California; Coachella Valley Archaeological Society (President, 1993-1994, 2000; Vice President, 1992, 1995-1999, 2001; Basic Archaeology Training Course Instructor, 1996-2000; Environmental Assessment Committee Chair, 1997-1999); Coachella Valley Historical Society; Malki Museum; Southwest Museum; El Paso Archaeological Society; Ohio Archaeological Society; West Virginia Archaeological Society; Museum of the Fur Trade; Cahokia Mounds Association.

Publications

Five publications in Geology concerning an oil field study, a ground water and earthquake study, a report on the geology of the Santa Rosa Mountain area, and papers on vertebrate and invertebrate Holocene Lake Cahuilla faunas. Approximately 55 articles in archaeology and history in various journals. Co-author of more than 100 cultural resources reports.

PROJECT HISTORIAN/REPORT WRITER
Terri Jacquemain, M.A.

Education

2004	M.A., Public History and Historic Resource Management, University of California, Riverside.
2002	B.S., Anthropology, University of California, Riverside.
2001	Archaeological Field School, University of California, Riverside.
1991	A.A., Riverside Community College, Norco Campus.

Professional Experience

2003-	Historian/Architectural Historian/Report Writer, CRM TECH, Riverside/Colton, California.
2002-2003	Teaching Assistant, Religious Studies Department, University of California, Riverside.
2002	Interim Public Information Officer, Cabazon Band of Mission Indians.
2000	Administrative Assistant, Native American Student Programs, University of California, Riverside.
1997-2000	Reporter, *Inland Valley Daily Bulletin*, Ontario, California.
1991-1997	Reporter, *The Press-Enterprise*, Riverside, California.

Membership

California Preservation Foundation.

PROJECT ARCHAEOLOGIST
Nina Gallardo, B.A.

Education

2004	B.A., Anthropology/Law and Society, University of California, Riverside.

Professional Experience

2004-	Project Archaeologist, CRM TECH, Riverside/Colton, California.

Honors and Awards

2000-2002	Dean's Honors List, University of California, Riverside.

PROJECT ARCHAEOLOGIST/FIELD DIRECTOR
Daniel Ballester, B.A.

Education

1998	B.A., Anthropology, California State University, San Bernardino.
1997	Archaeological Field School, University of Las Vegas and University of California, Riverside.
1994	University of Puerto Rico, Rio Piedras, Puerto Rico.
2007	Certificate in Geographic Information Systems (GIS), California State University, San Bernardino.
2002	"Historic Archaeology Workshop," presented by Richard Norwood, Base Archaeologist, Edwards Air Force Base; presented at CRM TECH, Riverside, California.

Professional Experience

2002-	Field Director, CRM TECH, Riverside/Colton, California.
1999-2002	Project Archaeologist, CRM TECH, Riverside, California.
1998-1999	Field Crew, K.E.A. Environmental, San Diego, California.
1998	Field Crew, A.S.M. Affiliates, Encinitas, California.
1998	Field Crew, Archaeological Research Unit, University of California, Riverside.

PROJECT ARCHAEOLOGIST
Robert Allen Porter, B.A.

Education

2000	B.A., Anthropology, California State University, San Bernardino.
2010	Graduate Student, Anthropology and Education, California State University, San Bernardino.

Professional Experience

2001-	Project Archaeologist, CRM TECH, Riverside/Colton, California.
2000	Archaeological field class under the direction of Claude Warren. Excavated units at Soda Lake in the Mojave Desert and produced lake bottom stratigraphic profiles and carbon sample collections.

Honors and Awards

Spring 2000	Dean's Honors List (G.P.A. of 4.0 in 15 units).
Fall 2000	Dean's Honors List (G.P.A. of 3.9 in 12 units).

APPENDIX 2

CORRESPONDENCE WITH NATIVE AMERICAN REPRESENTATIVES*

* A total of 12 local Native American representatives were contacted. A sample letter is included in this report.

Subject: 2535A Victorville Emergency Sewer Arch.
Date: Tuesday, June 14, 2011 11:28 AM
From: Nina<ngallardo@crmtech.us>
To: Dave Singleton <ds_nahc@pacbell.net>

RE: Sacred Land records search

Dave:

This is to request a Sacred Lands records search.

Name of project:
The Upper Narrows Emergency Sewer Replacement Project
CRM TECH #2535A (Victorville Emergency Sewer Arch)

Project size:
Approximately 2.5 linear miles and 2.74 acres

Location:
City of Victorville
San Bernardino County

USGS 7.5' quad sheet data:
Victorville, Calif.
Sections 10 and 15, T5N R4W, SBBM
(Map attached)

Please call if you need more information or have any questions. Results may be faxed to the number below. I appreciate your assistance in this matter.

Nina Gallardo
CRM TECH
1016 E. Cooley Drive, Suite A/B
Colton, CA 92324
office: (909) 824-6400
fax: (909) 824-6405
ngallardo@crmtech.us

STATE OF CALIFORNIA Edmund G. Brown, Jr., Governor

NATIVE AMERICAN HERITAGE COMMISSION
915 CAPITOL MALL, ROOM 364
SACRAMENTO, CA 95814
(916) 653-5251
Fax (916) 657-5390
Web Site www.nahc.ca.gov
ds_nahc@pacbell.net

June 16, 2011

Ms. Nina Gallardo
CRM TECH
1016 E. Cooley Drive, Suite A/B
Colton, CA 92324

Sent by FAX to: 909-824-6405
No. of Pages: 4

Re: Sacred Lands File Search and Native American Contacts list for the **"Proposed 2535A Victorville Emergency Sewer Arch Project;"** located in the City of Victorville; San Bernardino County, California

Dear Ms. Gallardo:

The Native American Heritage Commission (NAHC) conducted a Sacred Lands File search of the 'area of potential effect,' (APE) based on the USGS coordinates provided and found **Native American cultural resources** **were not identified** in the USGS coordinates you specified. Also, please note; the NAHC Sacred Lands Inventory is not exhaustive; Native American cultural resources may be inadvertently discovered during ground-breaking activity.

The California Environmental Quality Act (CEQA – CA Public Resources Code §§ 21000-21177, amendments effective 3/18/2010) requires that any project that causes a substantial adverse change in the significance of an historical resource, that includes archaeological resources, is a 'significant effect' requiring the preparation of an Environmental Impact Report (EIR) per the CEQA Guidelines defines a significant impact on the environment as 'a substantial, or potentially substantial, adverse change in any of physical conditions within an area affected by the proposed project, including ...objects of historic or aesthetic significance." In order to comply with this provision, the lead agency is required to assess whether the project will have an adverse impact on these resources within the 'area of potential effect (APE), and if so, to mitigate that effect. CA Government Code §65040.12(e) defines "environmental justice" provisions and is applicable to the environmental review processes.

Early consultation, even during Initial Study or First Phase surveys with Native American tribes in your area is the best way to avoid unanticipated discoveries once a project is underway. Local Native Americans may have knowledge of the religious and cultural significance of the historic properties of the proposed project for the area (e.g. APE). Consultation with Native American communities is also a matter of environmental justice as defined by California Government Code §65040.12(e). We urge consultation with those tribes and interested Native Americans on the list of Native American Contacts we attach to this letter in order to see if your proposed project might impact Native American cultural resources. Lead agencies should consider avoidance as defined in §15370 of the CEQA Guidelines when significant cultural resources as defined by the CEQA Guidelines §15064.5 (b)(c)(f) may be affected by a proposed project. If so, Section 15382 of the CEQA Guidelines defines a

significant impact on the environment as "substantial," and Section 2183.2 which requires documentation, data recovery of cultural resources.

Partnering with local tribes and interested Native American consulting parties, on the NAHC list, should be conducted in compliance with the requirements of federal NEPA (42 U.S.C 4321-43351) and Section 106 and 4(f) of federal NHPA (16 U.S.C. 470 *et seq*), 36 CFR Part 800.3 (f) (2) & .5, the President's Council on Environmental Quality (CSQ, 42 U.S.C 4371 *et seq.* and NAGPRA (25 U.S.C. 3001-3013) as appropriate. The 1992 *Secretary of the Interiors Standards for the Treatment of Historic Properties* were revised so that they could be applied to all historic resource types included in the National Register of Historic Places and including cultural landscapes. Also, federal Executive Orders Nos. 11593 (preservation of cultural environment), 13175 (coordination & consultation) and 13007 (Sacred Sites) are helpful, supportive guides for Section 106 consultation.

Also, California Public Resources Code Section 5097.98, California Government Code §27491 and Health & Safety Code Section 7050.5 provide for provisions for accidentally discovered archeological resources during construction and mandate the processes to be followed in the event of an accidental discovery of any human remains in a project location other than a 'dedicated cemetery', another important reason to have Native American Monitors on board with the project.

To be effective, consultation on specific projects must be the result of an ongoing relationship between Native American tribes and lead agencies, project proponents and their contractors, in the opinion of the NAHC. An excellent way to reinforce the relationship between a project and local tribes is to employ Native American Monitors in all phases of proposed projects including the planning phases.

Confidentiality of "historic properties of religious and cultural significance" may also be protected under Section 304 of he NHPA or at the Secretary of the Interior discretion if not eligible for listing on the National Register of Historic Places. The Secretary may also be advised by the federal Indian Religious Freedom Act (cf. 42 U.S.C., 1996) in issuing a decision on whether or not to disclose items of religious and/or cultural significance identified in or near the APE and possibility threatened by proposed project activity.

If you have any questions about this response to your request, please do not hesitate to contact me at (916) 653-6251.

Sincerely,

Dave Singleton
Program Analyst

Attachment: Native American Contact List

California Native American Contact List
San Bernardino County
June 16, 2011

Ramona Band of Cahuilla Mission Indians
Joseph Hamilton, Chairman
P.O. Box 391670 Cahuilla
Anza , CA 92539
admin@ramonatribe.com
(951) 763-4105
(951) 763-4325 Fax

San Manuel Band of Mission Indians
James Ramos, Chairperson
26569 Community Center Drive Serrano
Highland , CA 92346
(909) 864-8933
(909) 864-3724 - FAX
(909) 864-3370 Fax

Chemehuevi Reservation
Charles Wood, Chairperson
P.O. Box 1976 Chemehuevi
Chemehuevi Valley CA 92363
chair1cit@yahoo.com
(760) 858-4301
(760) 858-5400 Fax

Fort Mojave Indian Tribe
Tim Williams, Chairperson
500 Merriman Ave Mojave
Needles , CA 92363
(760) 629-4591
(760) 629-5767 Fax

San Fernando Band of Mission Indians
John Valenzuela, Chairperson
P.O. Box 221838 Fernandeño
Newhall , CA 91322 Tataviam
tsen2u@hotmail.com Serrano
(661) 753-9833 Office Vanyume
(760) 885-0955 Cell Kitanemuk
(760) 949-1604 Fax

AhaMaKav Cultural Society, Fort Mojave Indian
Linda Otero, Director
P.O. Box 5990 Mojave
Mohave Valley AZ 86440
(928) 768-4475
LindaOtero@fortmojave.com
(928) 768-7996 Fax

Morongo Band of Mission Indians
Michael Contreras, Cultural Heritage Prog.
12700 Pumarra Road Cahuilla
Banning , CA 92220 Serrano
(951) 201-1866 - cell
mcontreras@morongo-nsn.gov
(951) 922-0105 Fax

San Manuel Band of Mission Indians
Ann Brierty, Policy/Cultural Resources Departmen
26569 Community Center, Drive Serrano
Highland , CA 92346
(909) 864-8933, Ext 3250
abrierty@sanmanuel-nsn.gov
(909) 862-5152 Fax

This list is current only as of the date of this document.

Distribution of this list does not relieve any person of the statutory responsibility as defined in Section 7050.5 of the Health and Safety Code, Section 5097.94 of the Public Resources Code and Section 5097.98 of the Public Resources Code.

This list is only applicable for contacting local Native Americans with regard to cultural resources for the proposed 2535A Victorville Emergency Sewer Arch Project; located in the City of Victorville; San Bernardino County, California for which a Sacred Lands File search and Native American Contacts list were requested.

California Native American Contact List
San Bernardino County
June 16, 2011

Serrano Nation of Indians
Goldie Walker
P.O. Box 343 Serrano
Patton , CA 92369

(909) 862-9883

Ernest H. Siva
Morongo Band of Mission Indians Tribal Elder
9570 Mias Canyon Road Serrano
Banning , CA 92220 Cahuilla
siva@dishmail.com
(951) 849-4676

This list is current only as of the date of this document.

Distribution of this list does not relieve any person of the statutory responsibility as defined in Section 7050.5 of the Health and Safety Code, Section 5097.94 of the Public Resources Code and Section 5097.98 of the Public Resources Code.

This list is only applicable for contacting local Native Americans with regard to cultural resources for the proposed 2535A Victorville Emergency Sewer Arch Project; located in the City of Victorville; San Bernardino County, California for which a Sacred Lands File search and Native American Contacts list were requested.

CRM TECH
1016 E. Cooley Drive, Suite A/B
Colton, CA 92324

July 18, 2011

Linda Otero, Director
AhaMaKav Cultural Society
For Mojave Indian Tribe
P.O. Box 5990
Mojave Valley, AZ 86440

RE: The Upper Narrows Emergency Sewer Replacement Project
In the Cities of Victorville and Town of Apple Valley, San Bernardino County
CRM TECH Contract #2535

Dear Ms. Otero:

The Victor Valley Wastewater Reclamation Authority is proposing to replace the Upper Narrows Sewer System in the City of Victorville, San Bernardino County, California. The Area of Potential Effects (APE) is located at the northern end of Mojave Narrows Regional Park, along portions of the Mojave River Levee and C Street. The accompanying map, based on the USGS Victorville, Calif., 7.5' quadrangle, depicts the location of the APE in Section 10 and 15, T5N R4W, SBBM.

As part of a cultural resources study for the project referenced above, I am writing to request your input on potential Native American cultural resources concerns over the project. Please respond at your earliest convenience if you have any specific knowledge of sacred/religious sites or other sites of Native American traditional cultural value within or near the APE. The lead agencies for this project are the Victor Valley Wastewater Reclamation Authority for CEQA compliance purposes and the Federal Emergency Management Agency for Section 106 compliance purposes.

Any information, concerns or recommendations regarding cultural resources in the vicinity of the APE may be forwarded to CRM TECH by telephone, e-mail, facsimile or standard mail. Requests for documentation or information we cannot provide will be forwarded to our client and/or the lead agency. We would also like to clarify that CRM TECH, as the cultural resources consultant for the project, is not the appropriate entity to initiate government-to-government consultations. Thank you for the time and effort in addressing this important matter.

Respectfully,

Laura Hensley Shaker
CRM TECH

Encl.: APE map

TELEPHONE LOG

Name	Tribe/Affiliation	Telephone Contacts	Comments
Charles Wood, Chairperson	Chemehuevi Reservation	4:26 pm, August 10, 2011 9:16 am, August 11, 2011	Left messages; no response to date.
Linda Otero, Director of the AhaMaKav Cultural Society	Fort Mojave Indian Tribe	4:20 pm, August 10, 2011 9:25 am, August 11, 2011 9:00 am, August 16, 2011	Ms. Otero considers the APE to be sensitive for Native American cultural resources due to its location along the Mojave River. She stated that even though an existing sewer system was in place there, she was opposed to having the lines in the immediate vicinity of the river.
Tim Williams, Chairperson	Fort Mojave Indian Tribe	None	Linda Otero is the designated spokesperson for the tribe (see above).
Mike Contreras, Jr., Cultural Historic Program Coordinator	Morongo Band of Mission Indians	4:40 pm, August 10, 2011 9:07 am, August 16, 2011	Left messages; no response to date.
Ernest Siva, Tribal Elder	Morongo Band of Mission Indians	4:45 pm, August 10, 2011	Mr. Siva had no comments.
John Gomez, Jr., Cultural Resources Coordinator	Ramona Band of Cahuilla Indians	4:15 pm, August 10, 2011 9:30 am, August 16, 2011	Mr. Gomez stated that the tribe would defer to the San Manuel Band of Mission Indians for this project.
Joseph Hamilton, Chairman	Ramona Band of Cahuilla Indians	None	John Gomez, Jr., is the designated spokesperson for the tribe (see above).
John Valenzuela, Chairperson	San Fernando Band of Mission Indians	4:24 pm, August 10, 2011 9:35 am, August 16, 2011 12:03 pm, August 17, 2011	Mr. Valenzuela stated that the APE was sensitive for Native American cultural resources. He requested notification of any archaeological findings and that a monitor from his tribe be present in areas of undisturbed soils or where other findings had been made in the past.
James Ramos, Chairperson	San Manuel Band of Serrano Mission Indians	None	Ann Brierty is the designated spokesperson for the tribe (see below).
Ann Brierty, Cultural Resources Field Manager	San Manuel Band of Serrano Mission Indians	4:42 pm, August 10, 2011 9:00 am, August 17, 2011	Left messages; no response to date.
Mark Cochrane, Tribal Council Member	Serrano Nation of Mission Indians	4:30 pm, August 10, 2011	Mr. Cochrane stated that there was potential for buried Native American cultural remains in the APE. He requested notification of any such discoveries and that a qualified archaeologist be retained in that case.
Goldie Walker, Chairperson	Serrano Nation of Mission Indians	4:33 pm, August 10, 2011	Ms. Walker requested notification of any archaeological discoveries during the undertaking and that a qualified archaeologist be retained in that case. She further requested that proper procedures be followed in the event of such findings, particularly if it involved human remains. .

APPENDIX 3:

PREVIOUSLY RECORDED CULTURAL RESOURCES WITHIN THE SCOPE OF THE RECORDS SEARCH

Site No.	Recorded by/Date	Description
36-000058	Various 1949-1992	Prehistoric habitation site
36-000059	Various 1949-1992	Prehistoric habitation site
36-000060	Various 1949-1992	Prehistoric habitation site
36-000061	Various 1949-1989	Possible quarry
36-000062	Bierman 1949	Lithic scatter
36-000063	Various 1941-1992	Prehistoric habitation site
36-000065	Smith 1977	Lithic scatter
36-000180	Various 1963-1988	Prehistoric habitation site
36-000572	Turner 1971	Pictograph site
36-000966	Turner 1971	Pictograph site
36-000967	Various 1977-2007	Large midden site
36-000968	Various 1923-1986	Burial site
36-002910	Various 1977-2007	National Old Trails Highway/former U.S. Route 66
36-003033	Various 1975-2003	Mojave Trail
36-004282	Various 1950-1972	Village site
36-006301	McLean 1989	Historic-period refuse scatters
36-006315	Various 1989-1991	Lithic scatter
36-006793	Various 1990-2000	ATSF Railway
36-007146	McKenna 1992	Two rock alignments
36-007147	Various 1992-2007	Historic-period refuse scatter
36-007148	McKenna 1992	Historic-period refuse scatter
36-008265	Urbas 1996	Multiple-family property
36-008266	Various 1996	Multiple-family property
36-009360	Various 1999-2002	Stoddard Wells Road
36-010318	Cunkelman 1993	Telephone and telegraph line
36-012837	Smallwood 2006	Isolate: mano
36-013879	McDougall 2007	Large habitation site
36-014120	Bholat 2007	Flood-control berm
36-014171	Neuenschwander 1988	Rainbow Bridge
36-018731	Bricker 1995	Trailer park
36-018732	Bricker 1995	Service station and single-family residence
36-018733	Bricker 1995	Commercial building and garage
36-018734	Bricker 1995	Commercial building
36-018735	Bricker 1995	Trailer park
36-061277	Unknown	Isolate: metate
36-061291	McKenna et al. 1992	Isolate: mano
36-061292	McKenna et al. 1992	Isolate: mano fragment
36-064118	Briggs 1999	Isolate: two flakes
36-064130	Maxon 1999	Isolate: mano and one piece of debitage
36-064297	Briggs 1999	Isolate: flake
P1584-3H*	Unknown	Huntington-Rogers Trading Post
P1584-5H*	Steorts 1965	Rancho Verde and John Brown's house
P1584-17H*	Unknown	Historic-period refuse dumps
P1584-22H*	Unknown	Victorville Airport
PSBR-16*	Smith 1941	Verde Ranch Bluff-point

* "Pending" site

CRM TECH
1016 E. Cooley Drive, Suite A/B
Colton, CA 92324

January 14, 2013

Mark Beason
Office of Historic Preservation
Department of Parks and Recreation
1725 23rd Street, Suite 100
Sacramento, CA 95816-7100

Re: Project Effect Assessment on Site 36-013879
Upper Narrows Pipeline Replacement Project
City of Victorville and Town of Apple Valley
San Bernardino County, California
DR-1952 CA-PW#828; FEMA120312A; CRM TECH 2535A

Dear Mr. Beason:

Thank you for your careful review of our historical/archaeological resources survey report for the undertaking referenced above. In response to Item #7 in your December 27, 2012 comment letter, regarding the undertaking's potential effect on Site 36-013879, I am writing to provide the following clarification to the conclusion and recommendations on that site.

1. *The proposed undertaking will have a physical impact on a small portion of the site, which may qualify as a "historic property" pending further study on the site as a whole.*

   As stated in our report dated February 17, 2012, Site 36-013879 encompasses one of the six staging areas for the undertaking proposed at that time and a short segment of the proposed pipeline (Fig. 1), where no cultural remains associated with the site were found on the ground surface. Trenching is proposed for the installation of this segment of the pipeline, but no subsurface ground disturbances were anticipated at the staging area. Since the completion of the study, the staging area within the site boundary has been removed from the project plan as not being essential to the implementation of the undertaking. Therefore, the undertaking will impact only the small portion of 36-013879 along the pipeline alignment, but not the rest of the site.

2. *The likelihood of encountering potentially significant archaeological remains along the pipeline alignment is estimated to be relatively low.*

   Based on existing site maps, the proposed pipeline alignment is located across the southern edge of 36-013879, with approximately 40 linear feet of the open trenching proposed within the site boundary but not within any of the previously established archaeological loci of the site (Fig. 1). As mentioned above, no cultural remains were observed at that location during the field survey. More importantly, the segment of the pipeline alignment within the site boundary lies in the Desert Knolls Wash and the adjacent flood plain, in an area subject to seasonal flooding. In our opinion, the small portion of 36-013879 that will be disturbed during the undertaking is situated in a setting that is not conducive either for the deposition or for the preservation of potentially significant prehistoric archaeological remains.

Tel: 909 824 6400 Fax: 909 824 6405

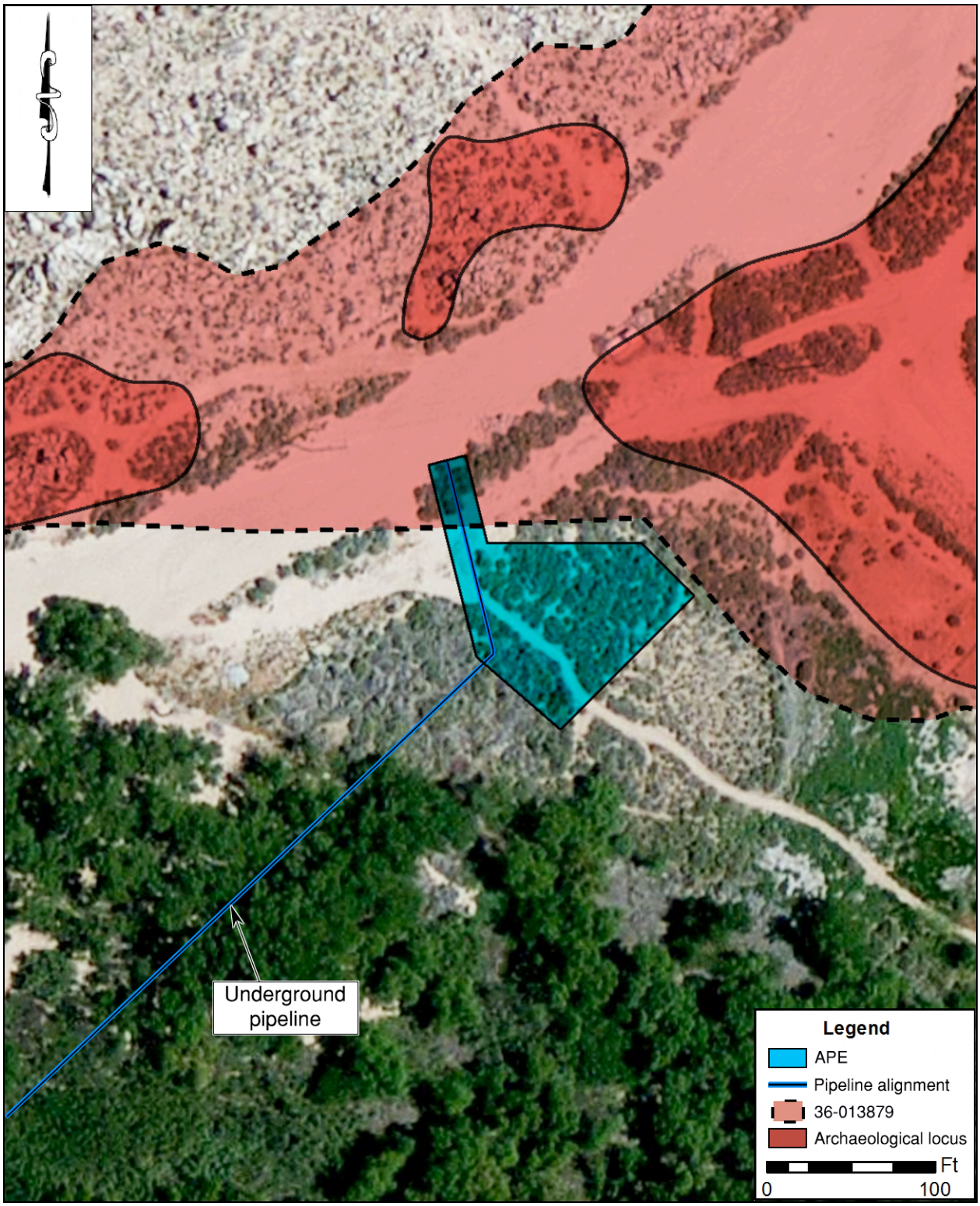

Figure 1. Location of Site 36-013879 in relation to the APE.

3. *Mitigation measures have been adopted to ensure that no potentially significant archaeological remains will be disturbed at Site 36-013879 during the undertaking.*

   On p. 22 of our report, we presented the following recommendations regarding pipeline installation within the boundary of 36-013879:

   > Trenching operations within or adjacent to the boundary of Site 36-013879 should be accomplished through controlled excavations under the direction and close observation of a qualified archaeologist in order to ascertain the presence or absence of potentially significant subsurface cultural remains in that portion of the site. Given its location within the Desert Knolls Wash, hand-excavation of standard archaeological units is not unlikely to be productive. However, if a substantial archaeological deposit is encountered, the mechanical excavations should be halted or diverted while an archaeological team recovers the materials through procedures consistent to a standard archaeological testing program. The ultimate goal of these procedures is to assess the archaeological data potential of the portion of Site 36-013879 to be affected by the undertaking, and thereby determine its eligibility as a "historic property."

   It is our understanding that these recommendations, along with the recommendation for archaeological and Native American monitoring elsewhere in the APE, have been adopted by the Victor Valley Wastewater Reclamation Authority (VVWRA) and the Federal Emergency Management Agency (FEMA). Subsequently, the San Manuel Band of Mission Indians has signed an MOU with VVWRA to provide Native American monitors during the undertaking.

Based on these considerations, we have concluded that the proposed undertaking is unlikely to have an adverse effect on Site 36-013879 should the site as a whole prove to qualify as a "historic property," and that conclusion is endorsed, I believe, by VVWRA, FEMA, and the San Manuel Band of Mission Indians. I hope the information presented above addresses your questions regarding the treatment of Site 36-013879 in our report, and thus enables you to offer your concurrence to the final conclusion of the report.

If you have any further questions, please do not hesitate to contact me at (909) 824-6000 or ttang@crmtech.us.

Sincerely,

Bai "Tom" Tang, M.A.
Principal, CRM TECH

OFFICE OF HISTORIC PRESERVATION
DEPARTMENT OF PARKS AND RECREATION
1725 23rd Street, Suite 100
SACRAMENTO, CA 95816-7100
(916) 445-7000 Fax: (916) 445-7053
calshpo@parks.ca.gov
www.ohp.parks.ca.gov

March 4, 2013 Reply In Reference To: FEMA120312A

Alessandro Amaglio
Regional Environmental Officer, Region IX
FEMA - U.S. Department of Homeland Security
1111 Broadway, Suite 1200
Oakland, CA 94607-4052

RE: Upper Narrows Pipeline Replacement Project, San Bernardino County, DR-1952 CA-PW#828

Dear Mr. Amaglio:

Thank you for forwarding the response to comments letter from CRM Tech dated January 15, 2013. The letter addresses comments made by the State Historic Preservation Officer (SHPO) in a letter dated December 27, 2012. After reviewing this letter, it still appears that trenching activities will affect site 36-013879, but that the effect will not be adverse. FEMA intends to condition the work so that ground disturbance at this location will be within the flood plain, which is subject to regular disturbance from seasonal flooding. Additionally, FEMA will ensure that all ground disturbance within site boundaries will be monitored by a qualified archaeologist and a Native American monitor.

Therefore, the SHPO can concur with the proposed Finding of No Adverse Effect. Please be advised that under certain circumstances, such as an unanticipated discovery or a change in project description, you may have future responsibilities for this undertaking under 36 CFR Part 800.

Thank you for seeking my comments and considering historic properties as part of your project planning. If you have any questions or concerns, please contact Mark Beason, at (916) 445-7047 or mark.beason@parks.ca.gov.

Sincerely,

Susan K Stratton for

Carol Roland-Nawi, Ph.D.
State Historic Preservation Officer