Earthquake Mitigation for Hospitals Workshop

Part 4 – Nonstructural Vulnerability

Building Nonstructural Vulnerability to Earthquakes

RISK = f(HAZARD, VULNERABILITY)

Risk is a function of both the potential hazard (seismic ground motion) and vulnerability (lack of seismic preparedness in structural and nonstructural systems)

Typical Nonstructural Elements

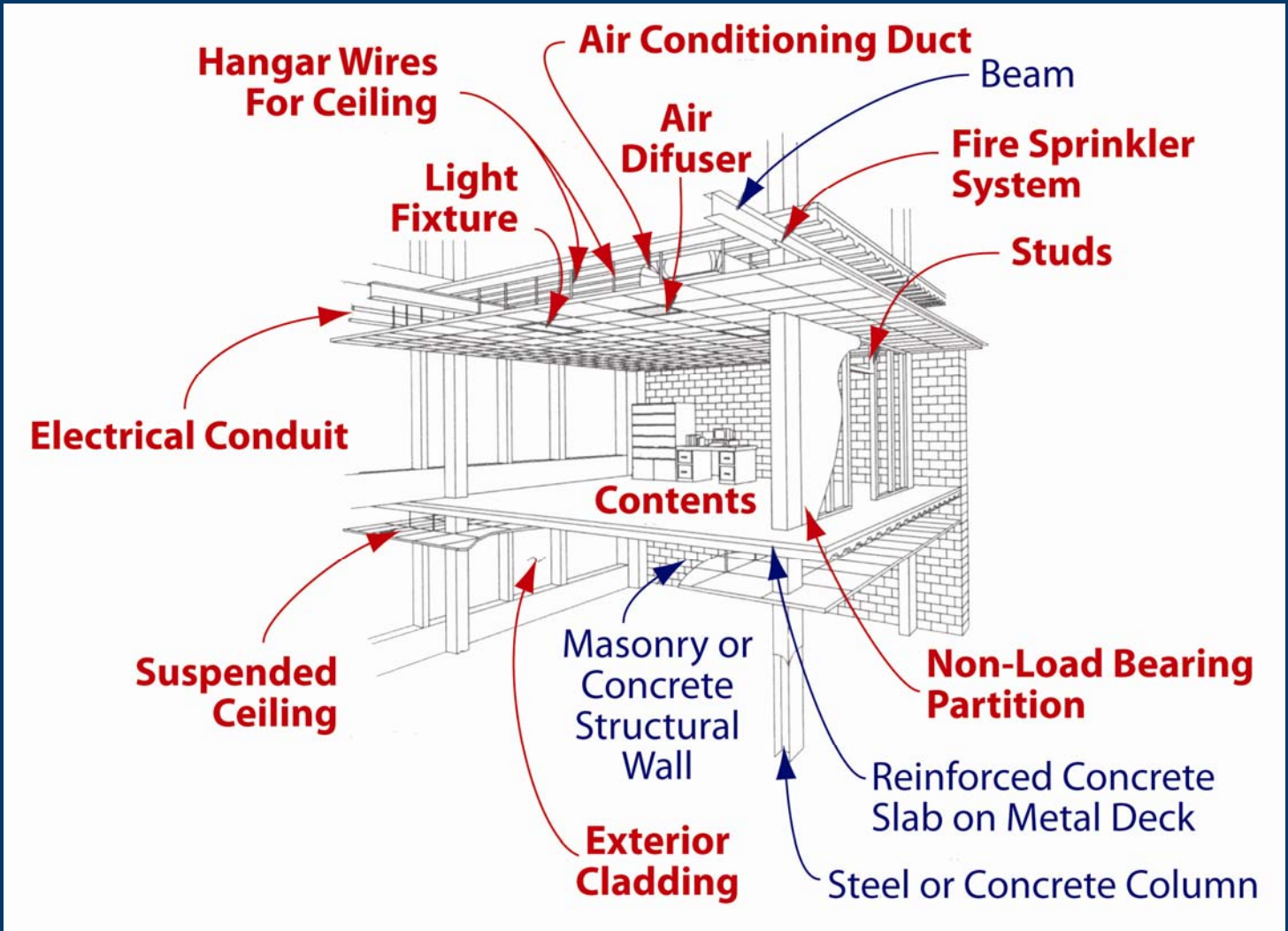

Nonstructural Elements

- Building utilities
- Architectural components
- Medical equipment & medical gases
- Furniture and contents

Building Utilities

- Electrical
- Fire Protection
- Communications
- Mechanical and Plumbing
- Medical Gases

Building Utilities - Electrical

- Emergency generator
  - Batteries
  - Day tank
  - Muffler
  - Fuel system
  - Control equipment

Building Utilities - Electrical

- Motor control cabinets
- Switchgear
- Transformers
- Panelboards
- Conduit
- Cable tray
- Bus duct
- UPS / battery racks

Building Utilities – Fire Protection

- Pumps
- Standpipes
- Distribution piping
- Sprinkler heads
- Valves
- Extinguishers

Building Utilities - Communications

- Telephone switchgear
- Computers
- Batteries
- Radios
- Antennas

Building Utilities – Mechanical & Plumbing

- Boilers
- Chillers
- Air handling units

- Fans
- Water heaters
- Cooling towers

Building Utilities – Mechanical & Plumbing

- Ductwork
- Piping

Architectural Components

- Ceilings
- Partitions
- Lighting
- Cladding
- Parapets
- Access Floors

Medical Equipment

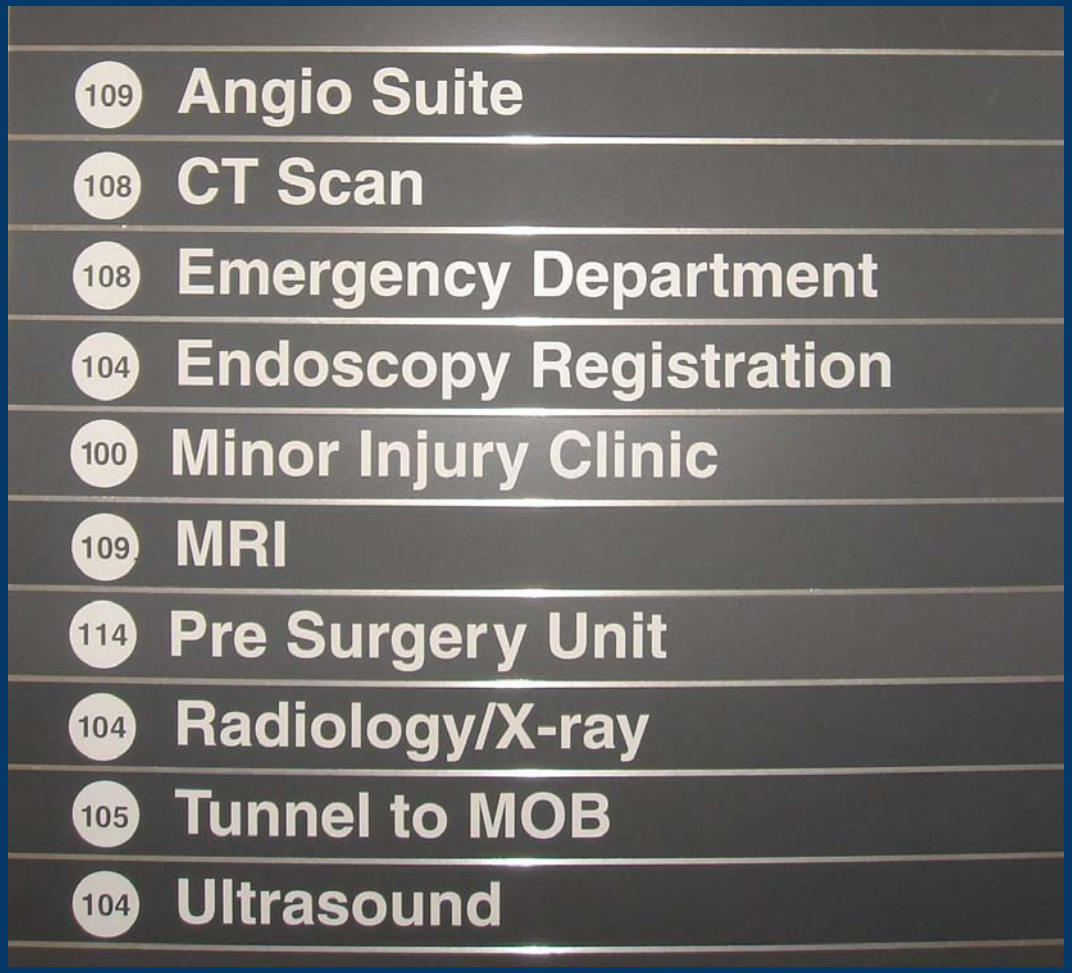

Medical Equipment

Furniture and Contents

- Computers
- Bookcases
- Storage cabinets
- Televisions
- Monitors
- Carts

Causes of Nonstructural Damage

- Shaking – floor acceleration causes items to slide or overturn
- Displacement – building distortions cause damage to connected items

Shaking

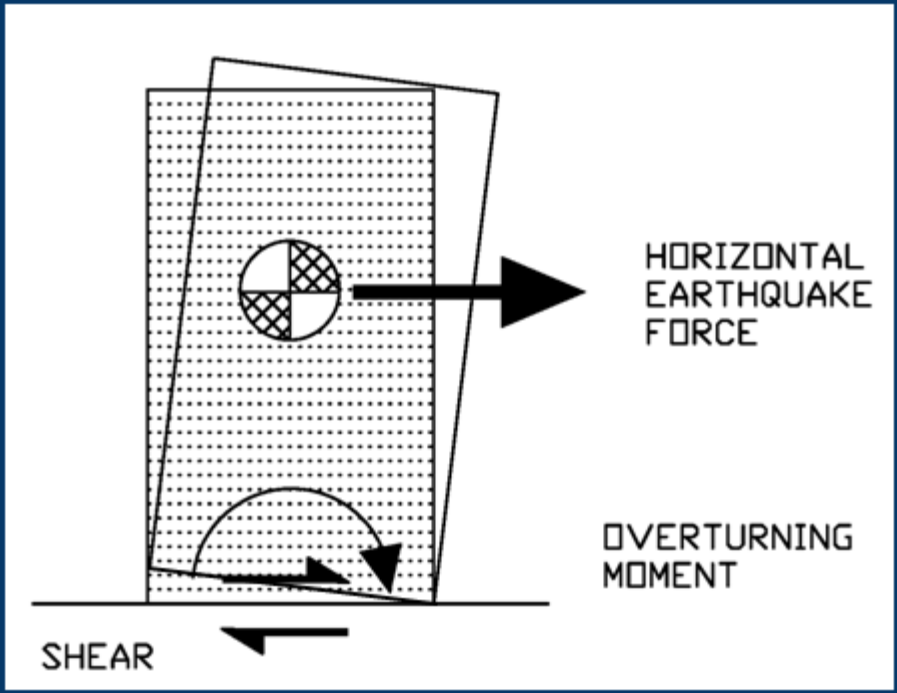

Displacement

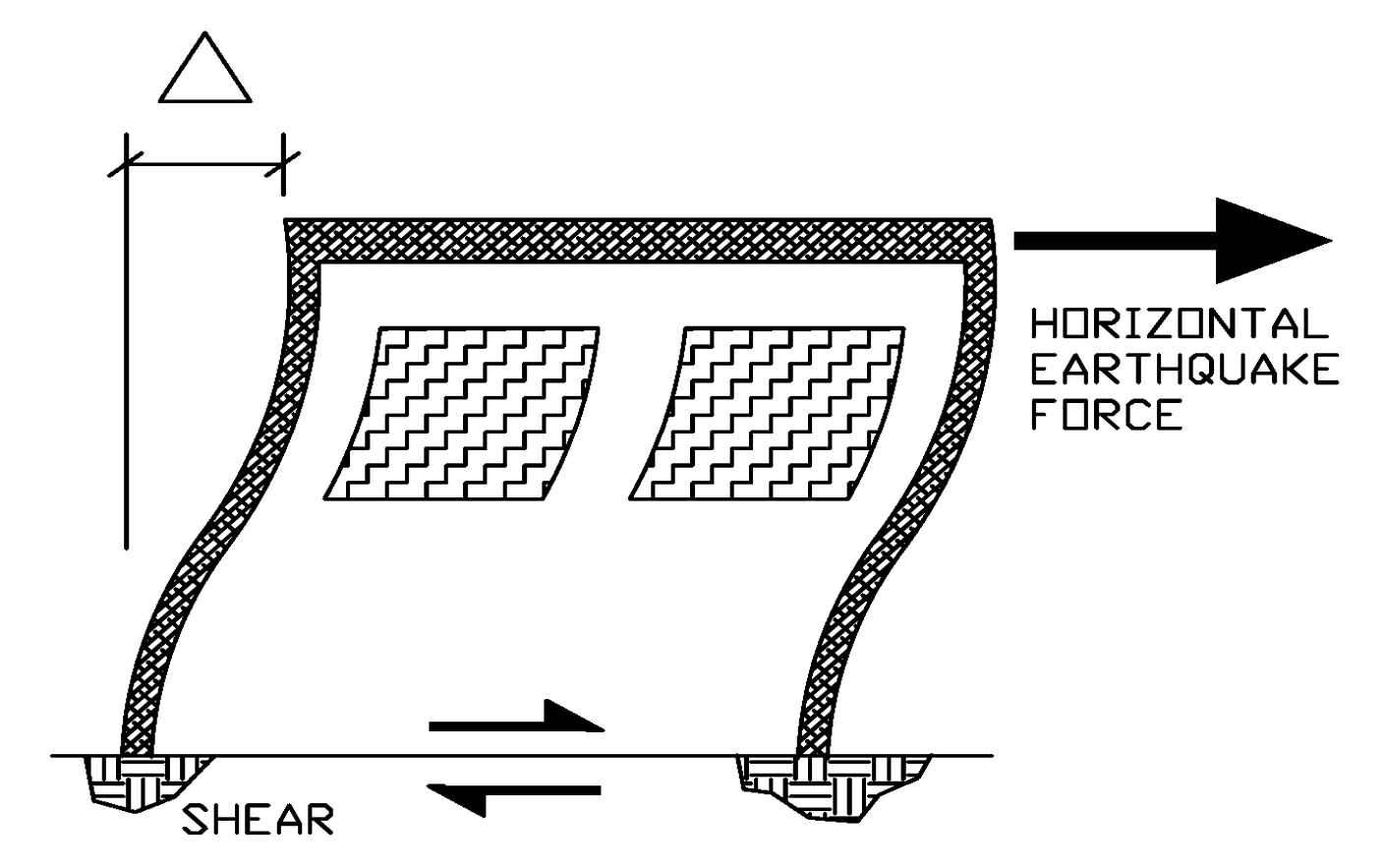

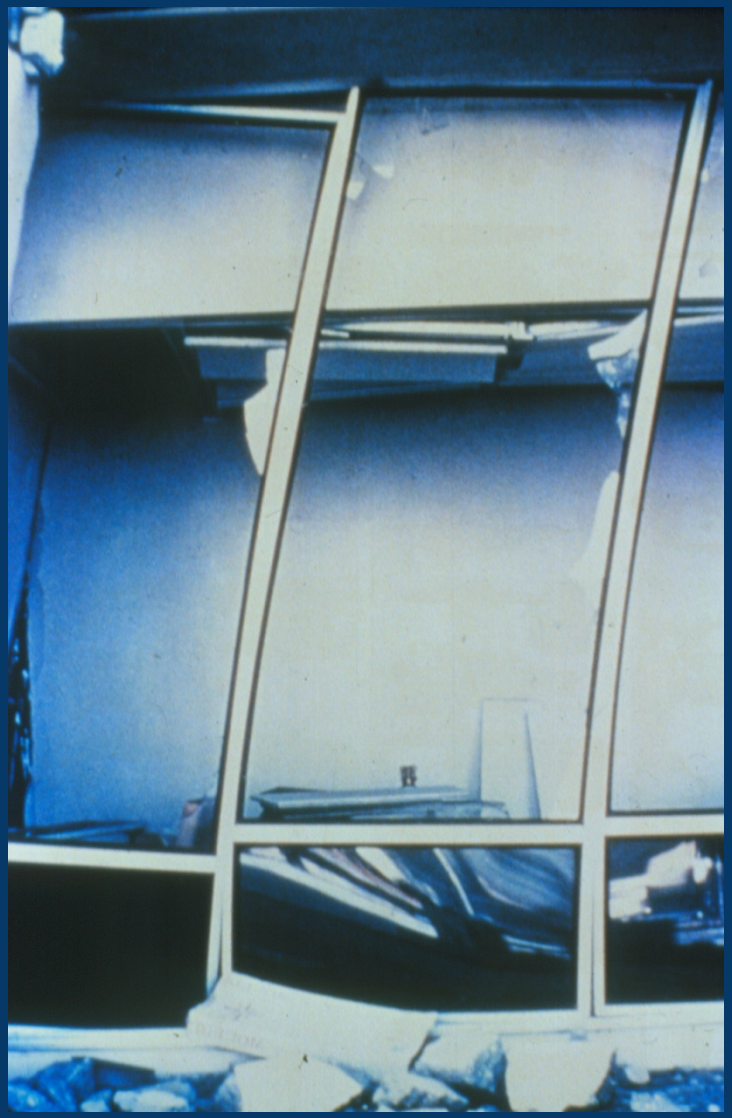

Significance of Nonstructural Damage

- Damage to nonstructural systems and components typically results in the majority of earthquake economic losses
- Losses can *exceed 50%* of the total value of a facility even though the structure sustains little or no damage

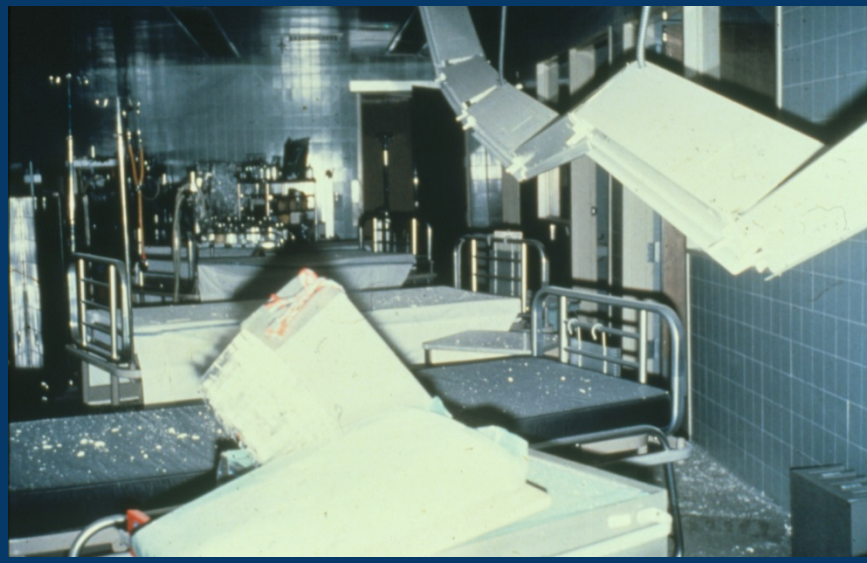

Significance of Nonstructural Damage

- Nonstructural damage impacts:
  - Life Safety
  - Loss of Function
  - Property Damage or Loss
  - Recovery & Restoration Time
  - Business Interruption

Examples of Damage - Utilities

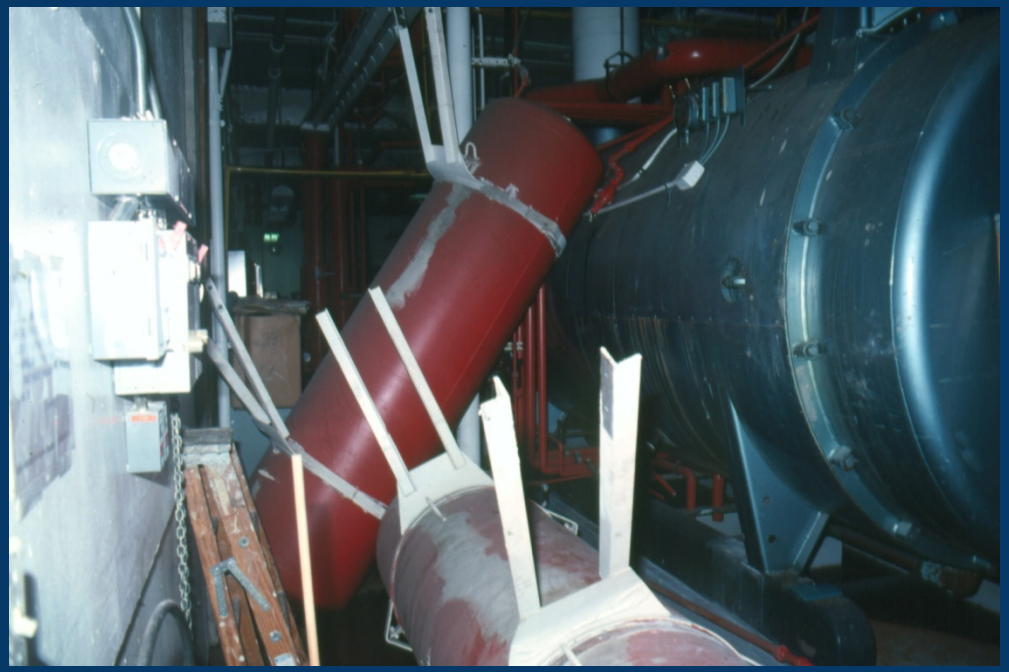

Examples of Damage - Utilities

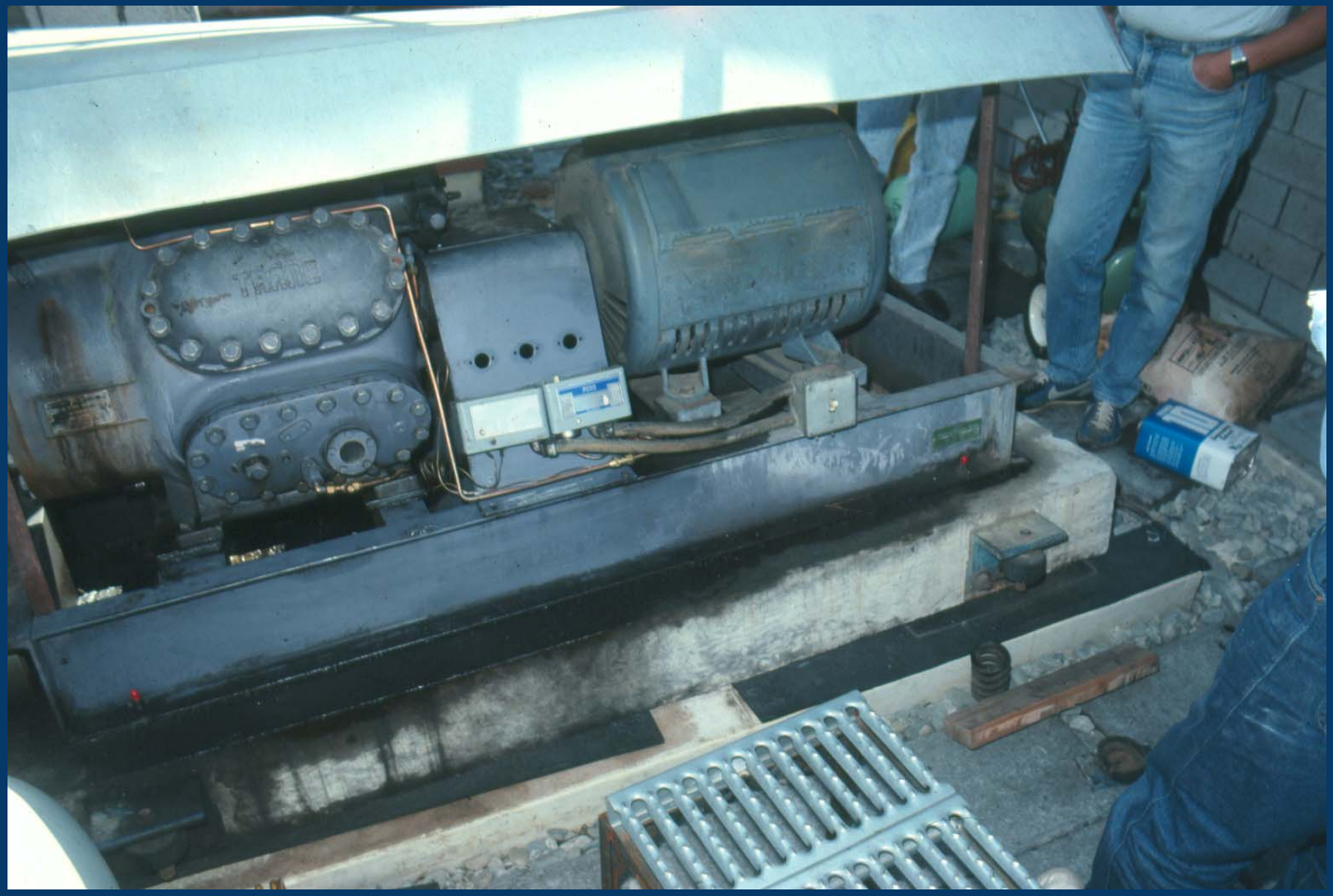

Examples of Damage - Utilities

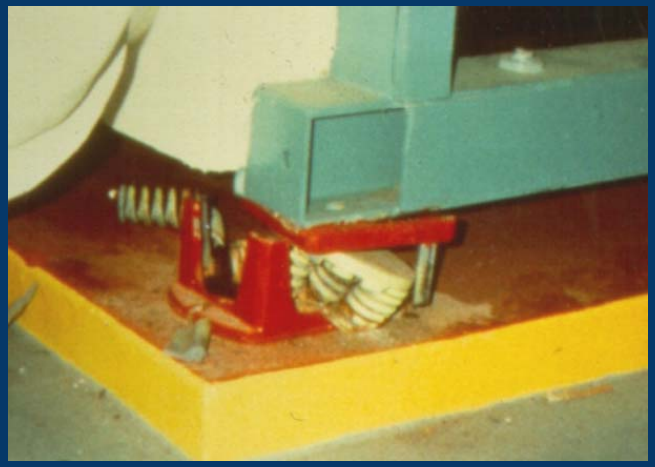

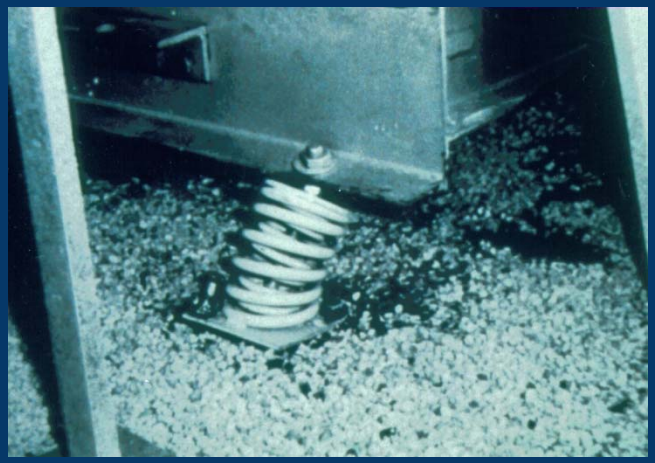

Examples of Damage - Utilities

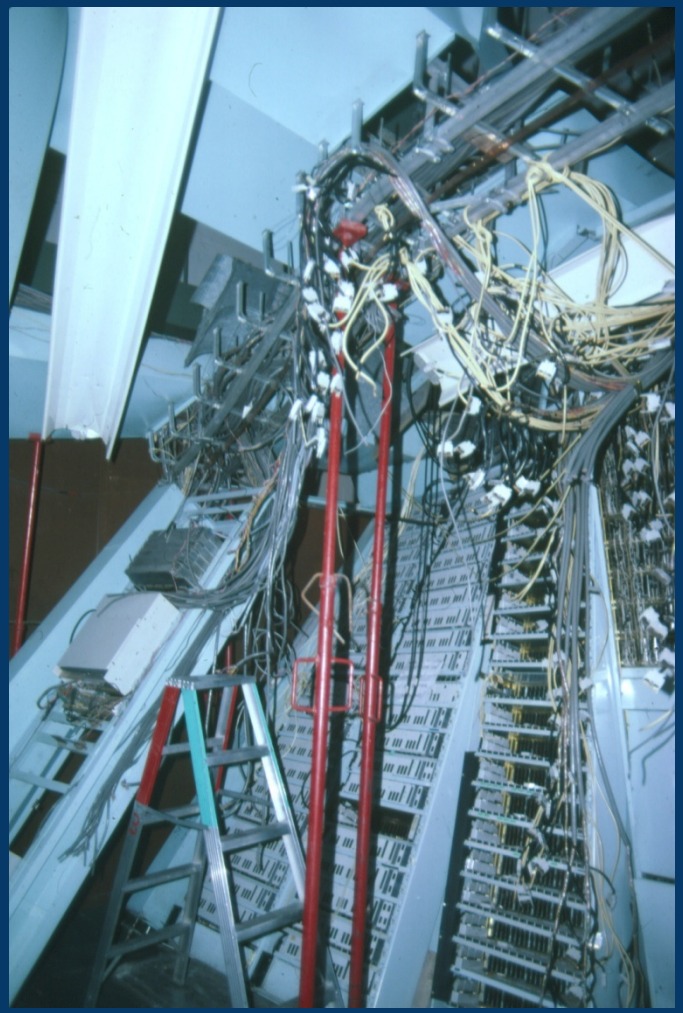

Examples of Damage - Utilities

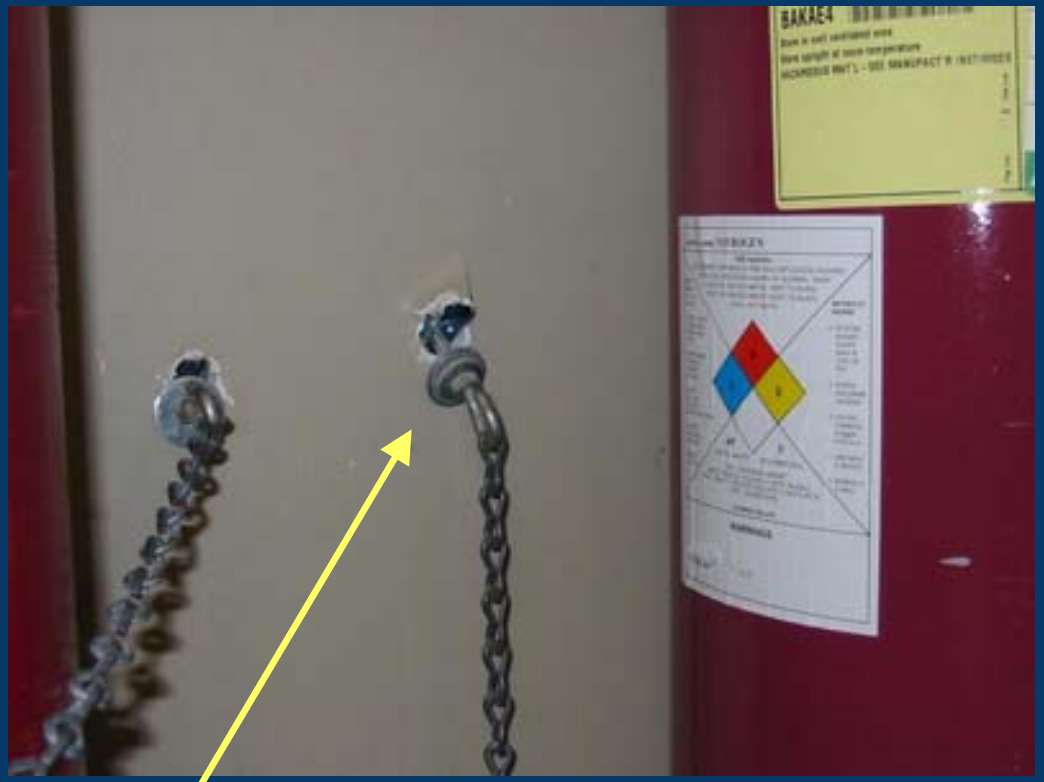

Restraints Pulling out from Wall

Examples of Damage - Utilities

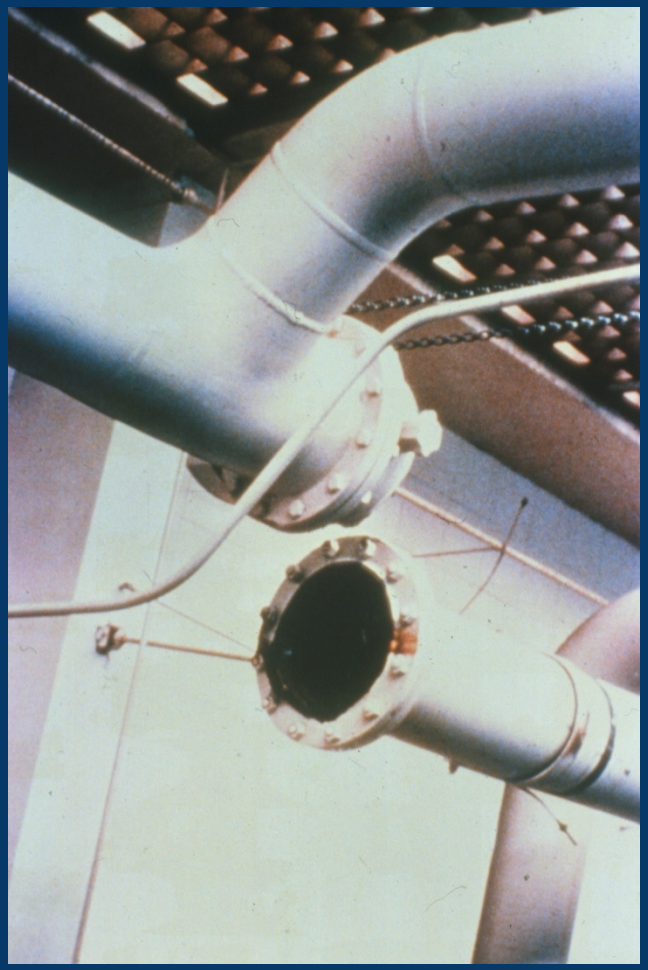

Examples of Damage - Utilities

Examples of Damage – Architectural Elements

Examples of Damage – Architectural Elements

Unreinforced clay-tile/CMU walls at stairs preventing egress

Examples of Damage – Architectural Elements

Examples of Damage – Architectural Elements

Examples of Damage – Contents

Examples of Damage – Contents

Examples of Damage – Contents

Examples of Damage – Contents

The Story of Olive View Hospital

The “New” Olive View Hospital

The “New” Olive View Hospital

Damage from the 1994 Northridge Earthquake

Questions?