APPENDIX C

PRELIMINARY PLAN SET

New Fire Station for:

BRISTOL TOWNSHIP

2100 Greenville Road — Bristolville, Ohio 44402

2007 OHIO BUILDING CODE

CODE COMPLIANCE

BUILDING INSPECTION DEPT. OF JURISDICTION	TRUMBULL COUNTY
X NEW CONSTRUCTION / ____ ADDITION / RENOVATION	
USE GROUP	MIXED USE NON-SEPERATED
DESCRIPTION	'B'- BUSINESS; 'S2'- CLOSED PARKING GARAGE
CONSTRUCTION TYPE	'SB' - COMBUSTIBLE UNPROTECTED
LIMITATIONS PER OBC	'B'- 2ST. 40' 9,000 S.F.; 'S2'- 2ST. 40' 13,500 S.F.
ACTUAL AREA	'B'- 1ST. 6,393 S.F.; 'S2'- 1ST. 4,975 S.F.; TOTAL 11,368 S.F.
AREA INCREASE DUE TO SPRINKLERS (OBC 506.1)	'B'- 6,393 + (9,000 x 200%) = 27,000 SF

REMARKS: THE ENTIRE BUILDING WILL BE EQUIPPED WITH A FIRE SUPPRESSION SYSTEM.

LOADING AND STRUCTURAL CRITERIA

SOIL BEARING CAPACITY: 2000 psf

LIVE LOADS:
- Floor Live load: N/A
- Roof Live load: 30 psf

DEAD LOADS:
- Floor Dead load: N/A
- Roof Dead load: 20 psf

ROOF SNOW LOADS:
- Ground Snow Load (Pg): 25 psf
- Flat Roof Snow Load (Pf): N/A (Roof Slope > 5°)
- Snow Exposure Factor (Ce): 0.9
- Snow Load Importance Factor (Is): 1.0 psf
- Thermal Factor (Ct): 1.0 psf

WIND LOAD:
- Basic Wind Speed: 90 mph
- Wind Importance Factor (Iw): 1.0
- Building Category: Category IV
- Wind Exposure: Exposure "B"
- Internal Pressure Coefficient: 1.0

SEISMIC LOAD:
- Seismic Design Category: Category IV
- Site Class: Class "D"

OCCUPANCY LOAD

Use Group:
- 'B' - 6393/100 GROSS = 64
- 'S2' - 4975/200 GROSS = 25

TOTAL OCCUPANTS = 89

Prepared By:

BAKER, BEDNAR & ASSOCIATES, INC.
Architects & Planners
628 Niles-Cortland Road SE, Suite 201 Warren, Ohio 44484 (330) 856-7222

Consulting Engineers:

Mechanical, Plumbing, & Electrical Consultants
PHOENIX ENGINEERING
8162 Market Street, Boardman, Ohio 44512 (330) 726-3477

Civil Engineers
LYNN, KITTINGER & NOBLE
2900 Elm Road NE, Warren, Ohio 44483 (330) 373-1244

ADD/ DEDUCT ALTERNATE LIST

ADD ALTERNATE #1 (GENERAL TRADE ONLY) - INCLUDE A SEPERATE STIPULATED SUM FOR MATERIAL AND LABOR TO REPLACE ALL SPECIFIED EXTRUDED CONCRETE CURBING WITH O.D.O.T. TYPE 6 CONCRETE CURBING AS DETAILED ON CIVIL ENGINEERING DRAWINGS.

ADD ALTERNATE #2 (GENERAL TRADE ONLY) - INCLUDE A SEPERATE STIPULATED SUM FOR MATERIAL AND LABOR TO INCREASE THE SPECIFIED 6" STANDARD DUTY CONCRETE PAVING AND 4" AGGREGATE BASE TO AN 8" HEAVY DUTY CONCRETE PAVING AND AN 8" AGGREGATE BASE IN THE AREAS INDICATED AND AS DETAILED ON THE CIVIL ENGINEERING DRAWINGS.

ADD ALTERNATE #3 (ELECTRICAL TRADE ONLY) - INCLUDE A SEPERATE STIPULATED SUM FOR MATERIAL AND LABOR TO FURNISH AND INSTALL LIGHTNING PROTECTION AS SPECIFIED IN THE ELECTRICAL SPECIFICATIONS.

ADD ALTERNATE #4 (GENERAL TRADE ONLY) - INCLUDE A SEPERATE STIPULATED SUM FOR MATERIAL AND LABOR TO REPLACE THE SPECIFIED 6" REINFORCED CONCRETE SLAB WITH 4x4 W4xW4 W.W.M. AND 6" GRAVEL BED WITH AN 8" REINFORCED CONCRETE SLAB WITH 4x4 W8xW8 W.W.M. AND 8" GRAVEL BED IN THE APPARATUS ROOM. (REFER TO SOIL REPORT IN SPECS FOR ADDITIONAL REQUIREMENTS)

ADD ALTERNATE #5 (GENERAL TRADE ONLY) - INCLUDE A SEPERATE STIPULATED SUM FOR MATERIAL AND LABOR TO FURNISH, INSTALL AND MAKE FINAL CONNECTIONS FOR THE FOLLOWING FIRE STATION EQUIPMENT (REFER TO SPECIFICATION SECTIONS - 10 9613 & 11 2300):
A. PORTABLE TURNOUT GEAR RACKS: (16 EA.) 3-PACK UNITS.
B. S.C.B.A. STORAGE RACK: (1 EA.)
C. PORTABLE HOSE STORAGE RACK: (1 EA.)
D. FIRE GEAR EXTRACTOR: (1 EA.)

ADD ALTERNATE #6 (GENERAL TRADE ONLY) - INCLUDE A SEPERATE STIPULATED SUM FOR MATERIAL AND LABOR TO FURNISH, INSTALL AND MAKE FINAL CONNECTIONS FOR THE FOLLOWING KITCHEN AND LAUNDRY ROOM APPLIANCES (REFER TO SPECIFICATION SECTION 11 3100):
A. REFRIGERATOR: (1 EA.)
B. RANGE: (1 EA.)
C. DISHWASHER: (1 EA.)
D. WASHER: (1 EA.)
E. DRYER: (1 EA.)

ADD/DEDUCT ALTERNATE #7 (GENERAL TRADE ONLY) - INCLUDE A SEPERATE STIPULATED SUM FOR MATERIAL AND LABOR TO REPLACE SPECIFIED EXTERIOR LOAD AND NON-LOAD BEARING METAL STUDS WITH NOMINAL 2x6 WOOD STUDS @ 16" O.C. AND TO REPLACE SPECIFIED INTERIOR METAL STUD PARTITIONS WITH NOMINAL 2x4 AND 2x6 (WHERE INDICATED) WOOD STUDS @ 16" O.C. THE USE OF PANELIZED WALL SYSTEMS WILL BE PERMITTED, PROVIDED THE SHOP DRAWINGS ARE PREPARED AND SUBMITTED TO THE ARCHITECT FOR APPROVAL PRIOR TO FABRICATION. THE COSTS ASSOCIATED WITH PREPARATION OF SHOP DRAWINGS ARE TO BE INCLUDED WITH THIS ALTERNATE. NOTE, SHOP DRAWINGS ARE NOT REQUIRED IF A PANELIZED WALL SYSTEM IS NOT USED.

FINAL CONSTRUCTION DOCUMENTS
1-26-2010

DRAWING INDEX

COVER	COVER SHEET	STRUCTURAL DRAWINGS	
CIVIL DRAWINGS		S1.0	FOUNDATION PLAN
C1	GRADING & DRAINAGE PLAN	S1.1	SLAB PLAN
C2	UTILITY PLAN	S2.0	STRUCTURAL FRAMING PLAN / DETAILS
C3	MISC. DETAILS & GENERAL NOTES	S3.0	ROOF FRAMING PLAN
C4	MISC. DETAILS & GENERAL NOTES	S4.0	STRUCTURAL NOTES
C5	STORM WATER POLLUTION PREVENTION PLAN		
C6	EROSION CONTROL DETAILS		
C7	STORM WATER GENERAL NOTES	FIRE PROTECTION DRAWINGS	
C8	SANITARY ON-SITE PLAN & PROFILE	FP1.0	FLOOR PLAN - FIRE PROTECTION
C9	SANITARY ON-SITE GENERAL NOTES & MISC. DETAILS	FP2.0	ATTIC PLAN - FIRE PROTECTION
C10	SANITARY ON-SITE MISC. DETAILS	FP3.0	DETAILS - FIRE PROTECTION
C11	SANITARY ON-SITE SOIL REPORT & CALCULATIONS		
C12	SANITARY HOLDING TANK GEN. NOTES & MISC. DETAILS		
		MECHANICAL DRAWINGS	
ARCHITECTURAL DRAWINGS		M1.0	FLOOR PLAN - MECHANICAL
A1.0	SITE PLAN	M2.0	SITE PLAN - MECHANICAL
A1.1	SITE DETAILS	M3.0	SCHEDULES & DETAILS - MECHANICAL
A3.0	FLOOR PLAN		
A3.1	ENLARGED FLOOR PLANS		
A4.0	NORTH & SOUTH ELEVATIONS		
A4.1	EAST & WEST ELEVATIONS	PLUMBING DRAWINGS	
A5.1	BUILDING SECTIONS	P1.0	FLOOR PLAN - PLUMBING (SANITARY)
A5.2	BUILDING SECTIONS	P1.1	FLOOR PLAN - PLUMBING (WATER & GAS)
A5.3	BUILDING SECTIONS	P2.0	SITE PLAN - PLUMBING
A5.4	BUILDING SECTIONS	P3.0	SCHEDULES & DETAILS - PLUMBING
A5.5	BUILDING SECTIONS		
A5.6	WALL SECTIONS		
A5.7	WALL SECTIONS		
A5.8	WALL SECTIONS	ELECTRICAL DRAWINGS	
A5.9	WALL SECTIONS	ES1.0	SITE PLAN - ELECTRICAL
A5.10	WALL SECTIONS	E1.0	FLOOR PLAN - ELECTRICAL
A6.0	SCHEDULES	E2.0	REFLECTED CEILING PLAN - ELECTRICAL
A6.1	DOOR TYPES	E3.0	FLOOR PLAN - ELECTRICAL (SYSTEMS)
A6.2	INTERIOR ELEVATIONS	E4.0	SCHEDULES - ELECTRICAL
A6.3	INTERIOR ELEVATIONS	E5.0	WIRING DIAGRAMS - ELECTRICAL
A7.0	REFLECTED CEILING PLAN	E6.0	RISER DIAGRAMS - ELECTRICAL

BAKER, BEDNAR & ASSOCIATES, INC.
Architects & Planners
628 Niles-Cortland Road SE, Suite 201 Warren, Ohio 44484
Phone: 330-856-7222
Fax: 330-856-7226
E-mail: info@bakerbednar.com

MECHANICAL / ELECTRICAL & PLUMBING CONSULTANT
Phoenix Design & Engineering
Phone: 330-726-3477
Fax: 330-726-5983

CIVIL CONSULTANT
LYNN, KITTINGER & NOBLE
Phone: (330) 373-1244
Fax: (330) 373-1268

STATE OF OHIO — REGISTERED ARCHITECTS
5866 BAKER
8513 BEDNAR
10144 SNYDER

BRISTOL TOWNSHIP
FIRE DEPARTMENT
STATION NO.17
2100 Greenville Road
Bristolville, Ohio 44402

REVISIONS:

DRAWN BY: ELB

DATE: 1/26/2010

PROJECT NUMBER 09062

SHEET NUMBER
COVER

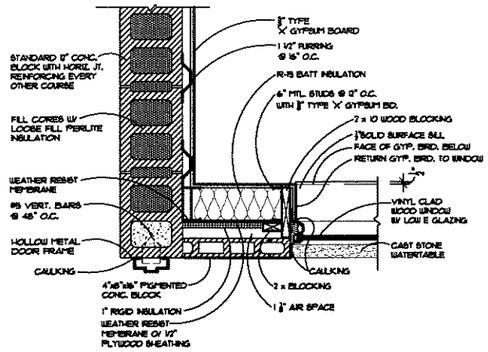

D1 ENLARGED WALL DETAIL

SCALE: 1" = 1'-0"

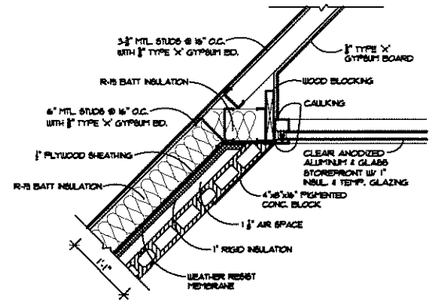

D2 ENLARGED WALL DETAIL

SCALE: 1" = 1'-0"

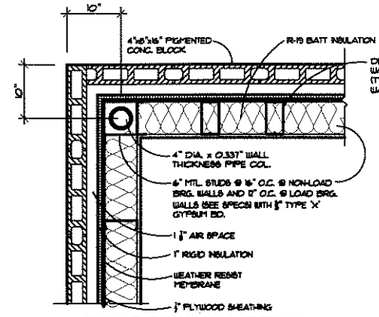

D3 ENLARGED WALL DETAIL

SCALE: 1" = 1'-0"

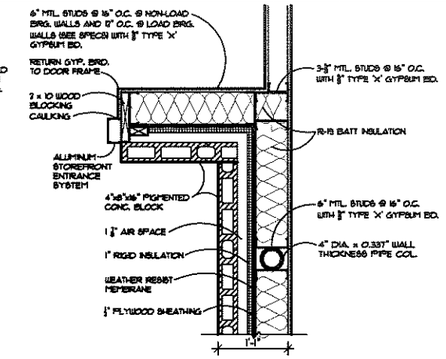

D4 ENLARGED WALL DETAIL

SCALE: 1" = 1'-0"

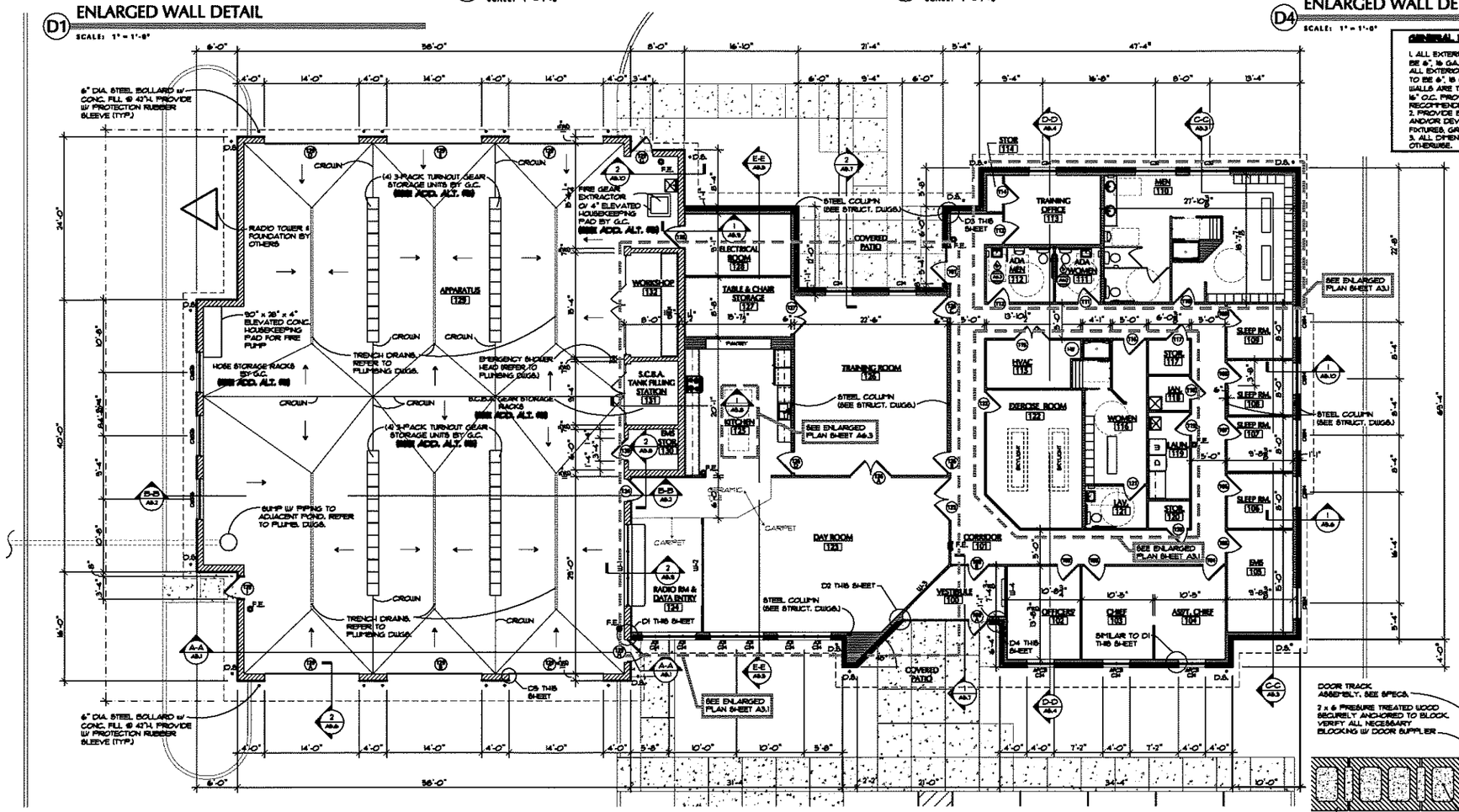

FLOOR PLAN

SCALE: 1/8" = 1'-0"

NORTH

GENERAL NOTES:

1. ALL EXTERIOR LOAD BEARING METAL STUD WALLS ARE TO BE 6", 16 GA. @ 12" O.C. AND ALIGNED WITH TRUSSES ABOVE. ALL EXTERIOR NON-LOAD BEARING METAL STUD WALLS ARE TO BE 6", 18 GA. @ 16" O.C. ALL INTERIOR NON-LOAD BEARING WALLS ARE TO BE 3 5/8" UNLESS NOTED OTHERWISE, 20 GA. @ 16" O.C. PROVIDE ANY AND ALL LATERAL BRACING AS RECOMMENDED BY METAL STUD SUPPLIER.
2. PROVIDE BLOCKING FOR ALL WALL MOUNTED FIXTURES AND/OR DEVICES INCLUDING BUT NOT LIMITED TO PLUMBING FIXTURES, GRAB BARS, WALL MOUNTED T.V.'S, ETC.
3. ALL DIMENSIONS ARE TO ROUGH FRAMING UNLESS NOTED OTHERWISE.

NOTE: EXTERIOR WINDOW NOTATIONS ARE BASED ON ANDERSEN 400 SERIES WINDOWS (SEE SPECS)

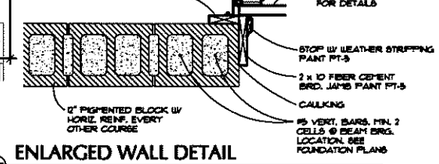

D5 ENLARGED WALL DETAIL

SCALE: 1" = 1'-0"

BAKER, BEDNAR & ASSOCIATES, INC.
Architects & Planners
628 Niles-Cortland Road SE, Suite 201 Warren, Ohio 44484
Phone: 330-856-7222
Fax: 330-856-7226
E-mail: info@bakerbednar.com

MECHANICAL / ELECTRICAL & PLUMBING CONSULTANT
Phoenix Design & Engineering
Phone: 330-726-3477
Fax: 330-726-5983

CIVIL CONSULTANT
LYNN, KITTINGER & NOBLE
Phone: (330) 373-1244
Fax: (330) 373-1268

STATE OF OHIO
5856 BAKER
8513 BEDNAR
10144 SNYDER
REGISTERED ARCHITECTS

BRISTOL TOWNSHIP

FIRE DEPARTMENT — STATION NO.17

2100 Greenville Road — Bristolville, Ohio 44402

REVISIONS:

DRAWN BY: ELB

DATE: 1/26/2010

PROJECT NUMBER 09062

SHEET NUMBER

A3.0

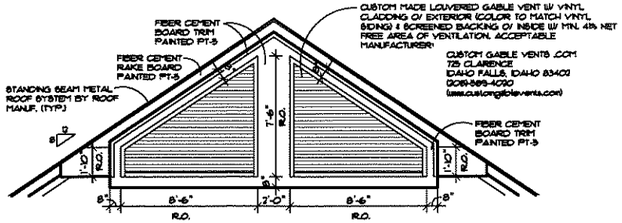

GABLE VENT DETAIL 'A'

SCALE: 3/8" = 1'-0"

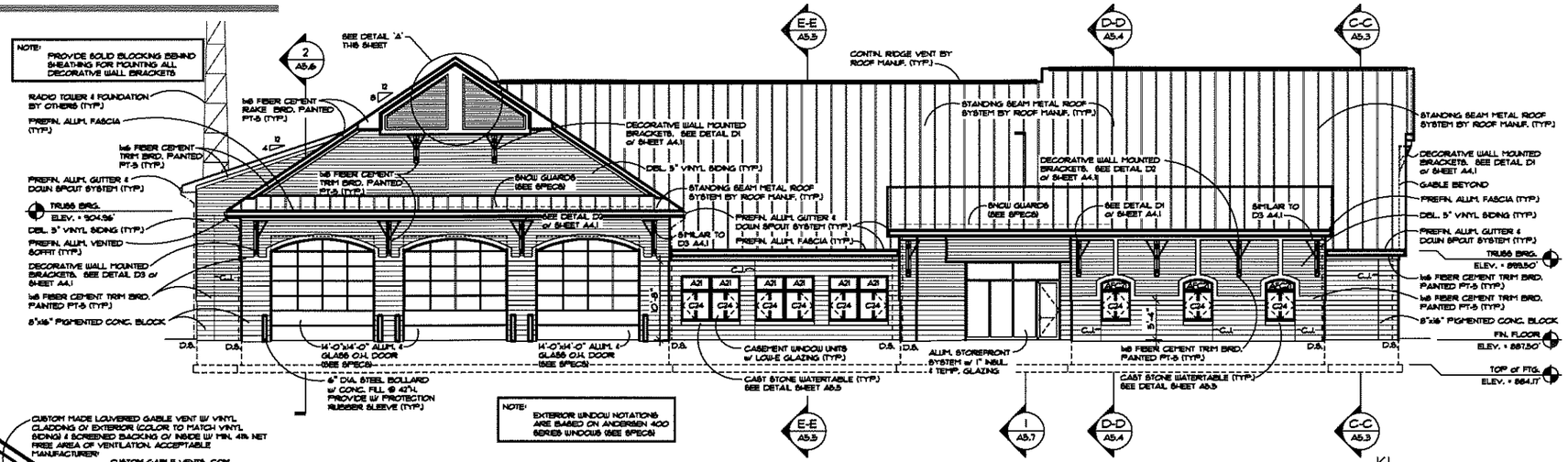

SOUTH ELEVATION

SCALE: 1/8" = 1'-0"

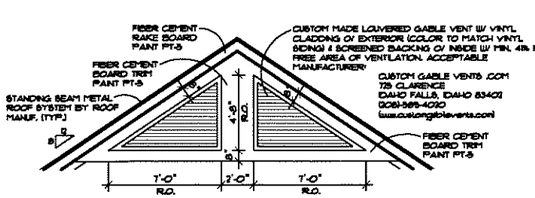

GABLE VENT DETAIL 'B'

SCALE: 1/4" = 1'-0"

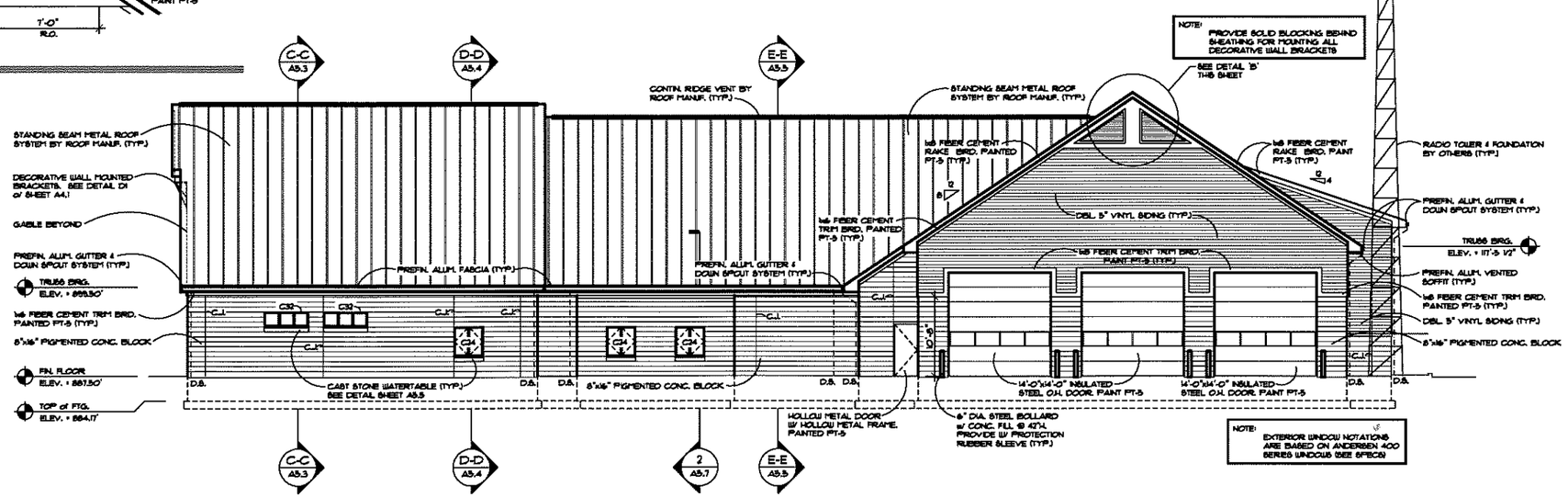

NORTH ELEVATION

SCALE: 1/8" = 1'-0"

BAKER, BEDNAR & ASSOCIATES, INC.
Architects & Planners
628 Niles-Cortland Road SE, Suite 201 Warren, Ohio 44484
Phone: 330-856-7222
Fax: 330-856-7226
E-mail: info@bakerbednar.com

MECHANICAL / ELECTRICAL & PLUMBING CONSULTANT
Phoenix Design & Engineering
Phone: 330-726-3477
Fax: 330-726-5983

CIVIL CONSULTANT
LYNN, KITTINGER & NOBLE
Phone: (330) 373-1244
Fax: (330) 373-1268

STATE OF OHIO
5856 BAKER
8513 BEDNAR
10144 SNYDER
REGISTERED ARCHITECT

BRISTOL TOWNSHIP

FIRE DEPARTMENT — STATION NO.17

2100 Greenville Road — Bristolville, Ohio 44402

REVISIONS:

DRAWN BY: ELB

DATE: 1/26/2010

PROJECT NUMBER 09062

SHEET NUMBER

A4.0

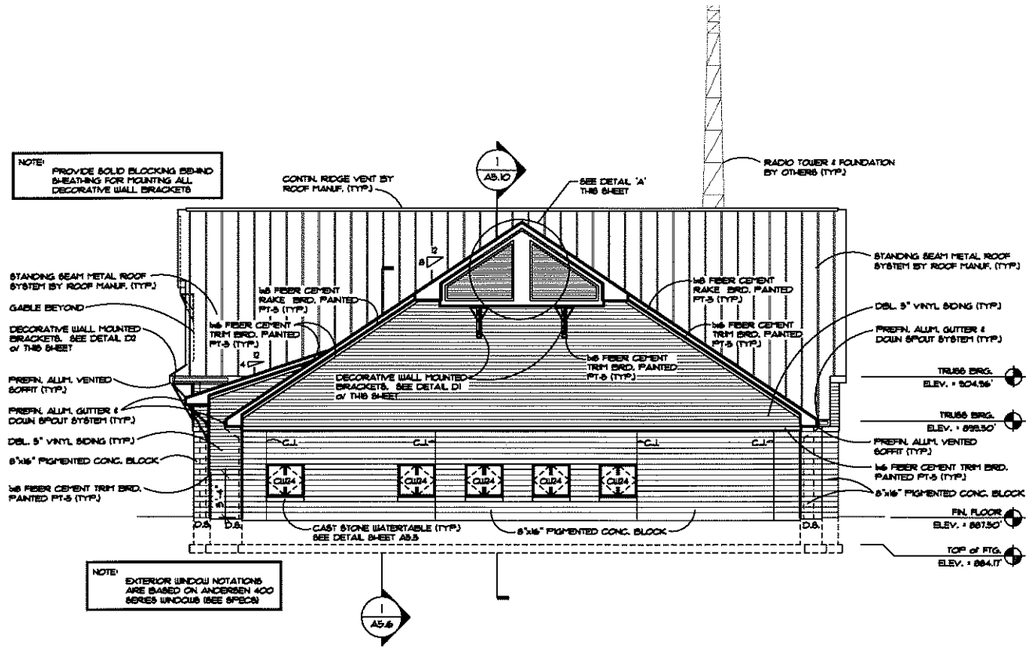

EAST ELEVATION

SCALE: 1/8" = 1'-0"

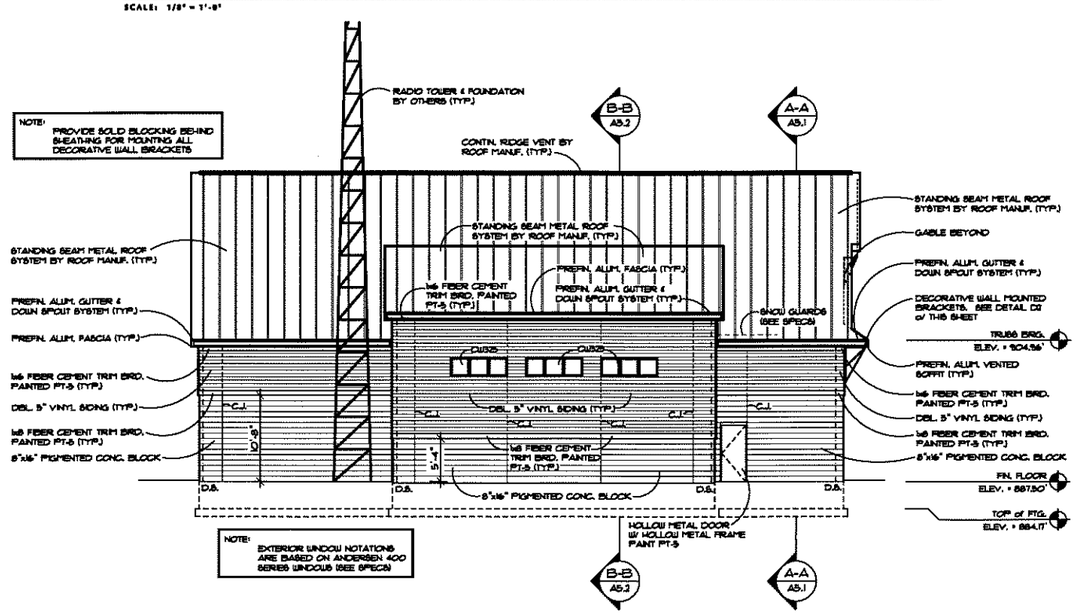

WEST ELEVATION

SCALE: 1/8" = 1'-0"

DECORATIVE WALL BRACKET DETAILS

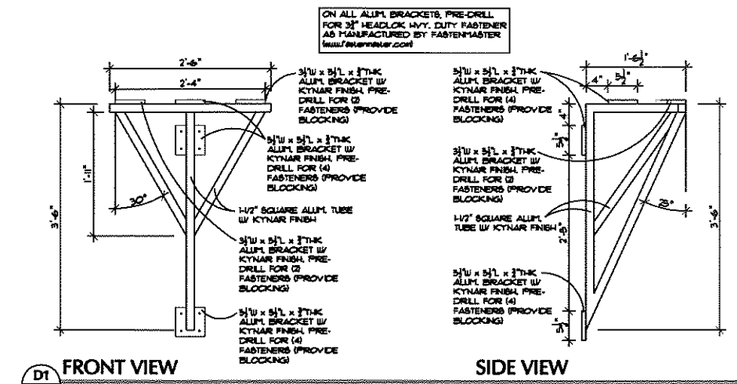

D1 A4.1 FRONT VIEW — SIDE VIEW

SCALE: 1" = 1'-0"

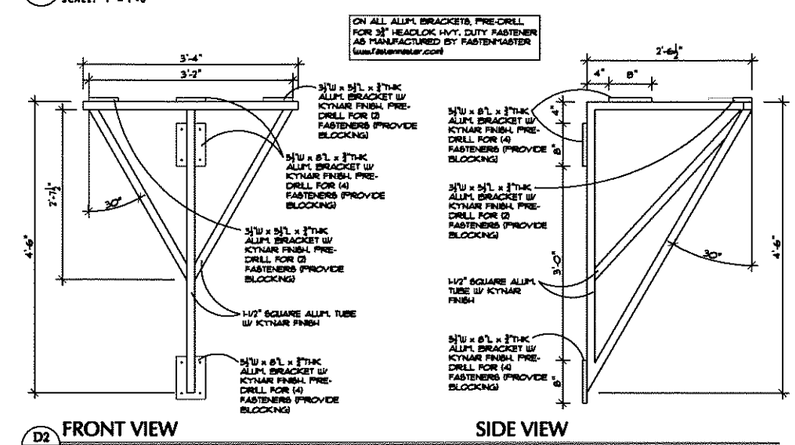

D2 A4.1 FRONT VIEW — SIDE VIEW

SCALE: 1" = 1'-0"

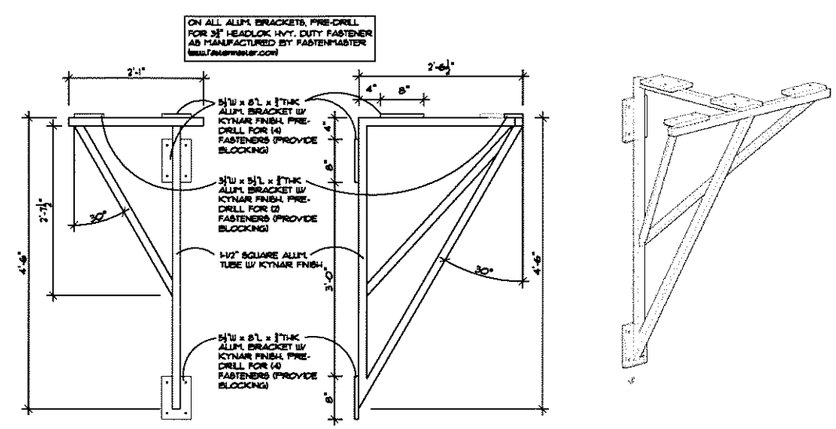

D3 A4.1 FRONT VIEW — SIDE VIEW — 3-D VIEW

SCALE: 1" = 1'-0" — NO SCALE

BAKER, BEDNAR & ASSOCIATES, INC.
Architects & Planners
528 Niles-Cortland Road SE,
Suite 201 Warren, Ohio 44484
Phone: 330-856-7222
Fax: 330-856-7226
E-mail: info@bakerbednar.com

MECHANICAL / ELECTRICAL & PLUMBING CONSULTANT
Phoenix Design & Engineering
Phone: 330-726-3477
Fax: 330-726-5983

CIVIL CONSULTANT
LYNN, KITTINGER & NOBLE
Phone: (330) 373-1244
Fax: (330) 373-1268

STATE OF OHIO — 5866 BAKER — 6513 BEDNAR — 10144 SNYDER — REGISTERED ARCHITECTS

BRISTOL TOWNSHIP
FIRE DEPARTMENT — STATION NO.17
2100 Greenville Road — Bristolville, Ohio 44402

REVISIONS:

DRAWN BY: ELB

DATE: 1/26/2010

PROJECT NUMBER 09062

SHEET NUMBER

A4.1

CATCH BASIN / HEADWALL TABLE

REF. NO.	ODOT TYPE	TOP	N. INV.	S. INV.	W. INV.	E. INV.	NORTH	EAST
CB No.1	2-2B	885.10	883.10	---	883.00	---	631200.31	2414149.82
CB No.2	2-2B	885.75	882.90	---	882.54	882.54	631201.73	2414057.83
CB No.3	2-2B	885.50	---	883.50	883.07	---	631377.22	2414264.73
CB No.4	2-3	885.60	---	883.00	882.93	882.93	631378.46	2414184.74
CB No.5	2-2B	885.60	---	---	882.42	882.42	631380.59	2414046.59
CB No.6	2-2B	885.50	---	---	882.60	882.60	631143.23	2414148.55
HW No.1	HW 2.1	885.50	---	---	882.35	---	631221.36	2414003.23
HW No.2	HW 2.1	885.50	---	---	882.25	---	631381.21	2414006.59
OUTLET STRUCTURE	2-2B	S E E	P L A N	S H E E T		C 4	631218.53	2413902.75

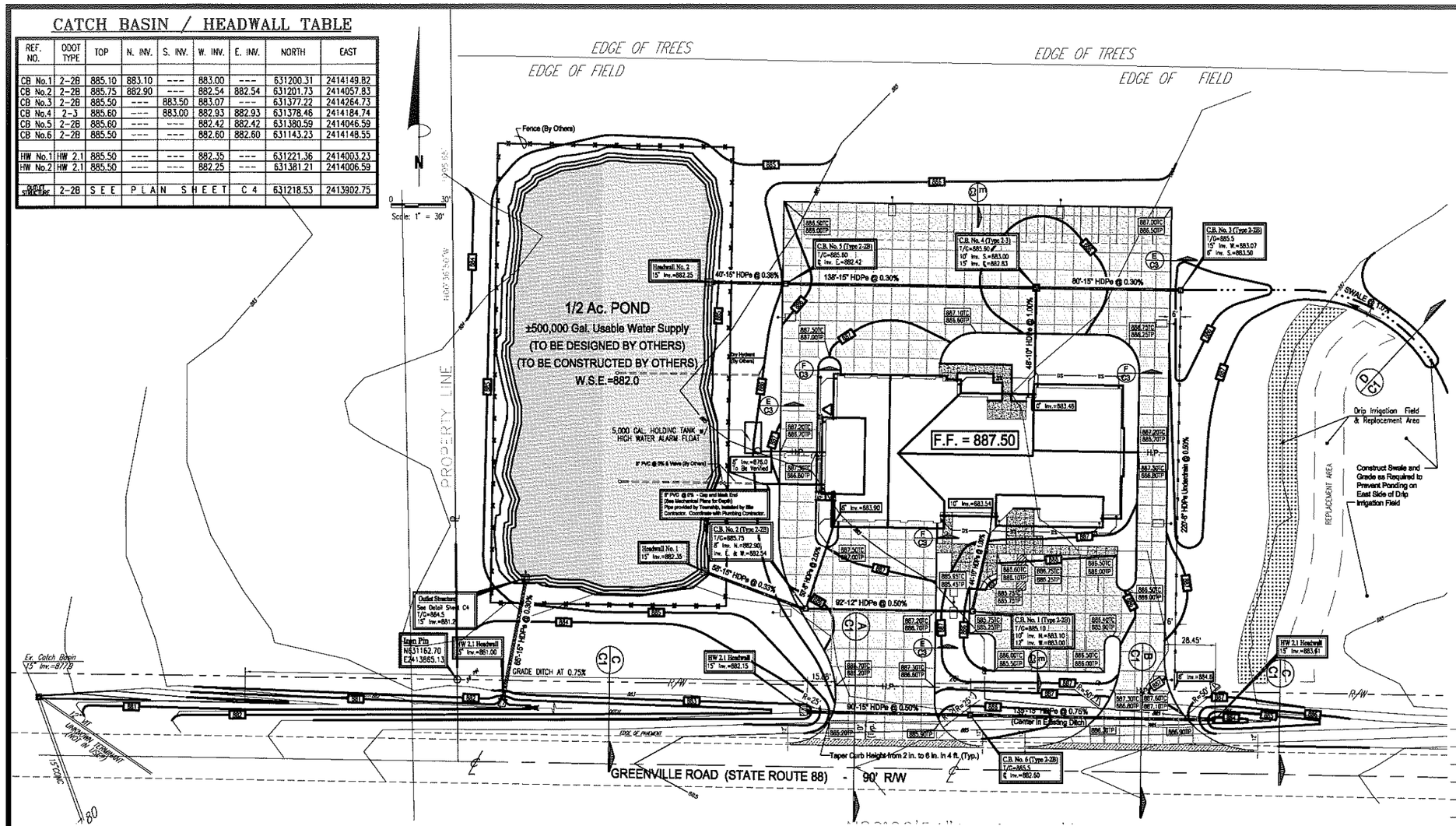

GENERAL NOTES:

1. SITE LAYOUT - SEE ARCHITECTURAL SITE PLAN FOR SITE LAYOUT AND DIMENSIONS.
2. MAINTAINING TRAFFIC - TRAFFIC SHALL BE MAINTAINED ALONG STATE ROUTE 88 IN ACCORDANCE WITH SECTION 614 OF THE CURRENT OHIO DEPARTMENT OF TRANSPORTATION CONSTRUCTION AND MATERIAL SPECIFICATIONS.
3. DOWNSPOUT DRAINS - DOWNSPOUT DRAINS SHALL BE 6" PVC SDR-35 OR SMOOTH LINED HDPE AT A MINIMUM OF 1.00% UNLESS NOTED OTHERWISE.
4. STORM SEWER ALONG S.R.88 - 15" STORM SEWER, CATCH BASIN AND HEADWALLS PROPOSED ALONG S.R. 88 SHALL BE INSTALLED IN THE EXISTING DITCH CENTER LINE.
5. CONCRETE PAVEMENT JOINTS - CONTRACTION JOINTS SHALL BE CONSTRUCTED WHERE SHOWN WITH A MAXIMUM 10' x 10' GRID. IF JOINTS ARE SAWCD, SAWING SHALL BEGIN AS SOON AS CONCRETE HAS OBTAINED ADEQUATE STRENGTH TO RESIST RAVELING OF THE JOINT EDGES BUT NO LATER THAN 12 HOURS AFTER CONCRETE HAS BEEN PLACED. DEPTH OF THE JOINT SHALL BE AT LEAST 1/4 THE SLAB THICKNESS. ISOLATION JOINTS WITH FULL DEPTH 1/2" EXPANSION JOINT MATERIAL SHALL BE PLACED AROUND ALL DRAINAGE STRUCTURES AND FIXED OBJECTS.
6. CONCRETE CURB - SEE ARCHITECTURAL SITE PLAN FOR LOCATION OF EXTRUDED CURB AND FULL DEPTH (ODOT TYPE 6) CURB. ADD ALTERNATE #1 IS TO INSTALL FULL DEPTH (ODOT TYPE 6) CURB THROUGHOUT PROJECT.
7. ENGINEERED FILL - DURING EXCAVATION OF THE PROPOSED POND THE AMOUNT OF MATERIAL SUITABLE FOR USE AS ENGINEERED FILL THAT WILL BE REQUIRED TO BALANCE THE SITE (ESTIMATED TO BE APPROXIMATELY 3,000 CU.YDS.) SHALL BE STOCKPILED IN THE LOCATION SHOWN ON PLAN SHEET C5.
8. BOUNDARY AND TOPOGRAPHIC SURVEY - THIS PLAN IS BASED ON A BOUNDARY AND TOPOGRAPHIC SURVEY PREPARED BY JOHN N. FRANOS, P.S.

STANDARD DUTY PAVEMENT

HEAVY DUTY PAVEMENT (ADD ALTERNATE 2)

DO NOT REPLACE TREATED SHOULDER IN THIS PORTION OF DRIVE FLARE IF SHOULDER HAS EQUAL OR BETTER PAVEMENT BUILDUP.

2 WORKING DAYS
BEFORE YOU DIG
CALL TOLL FREE 800-362-2764
OHIO UTILITIES PROTECTION SERVICE

LEGEND

	Iron Pin Found	MH	Manhole
	Swale/Ditch		Catch Basin/Inlet
	Toe or Top	FH	Fire Hydrant
W	Water Mains	W.V.	Water Valve
E	Aerial Electric	G.V.	Gas Valve
G	Gas Mains		Light Pole
T	Telephone Lines		Tele. Pole
E/T	Electric & Telephone Lines		Power Pole
X	Fence		Service Pole
S	Sanitary Sewer		Pole w Anchor
ST	Existing Storm Sewer	1010	Existing Contour
	Proposed Storm Sewer & Catch Basin	1010	Proposed Contour
TC	Top of Curb		Slope Line
NG	Normal Gutter		Proposed Spot Elevation
TP	Top of Pavement		Proposed Spot Elevation
HP	High Point		

GRADING & DRAINAGE PLAN

0 30 60
GRAPHIC SCALE
(IN FEET)

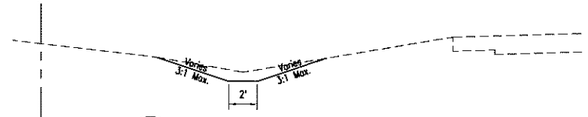

C / C1 Typical Ditch Section

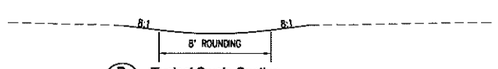

D / C1 Typical Swale Section

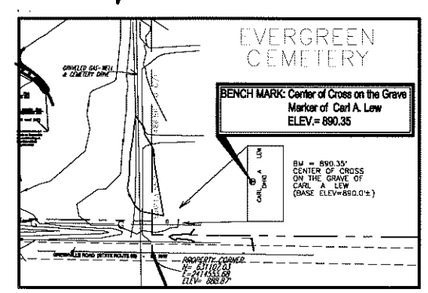

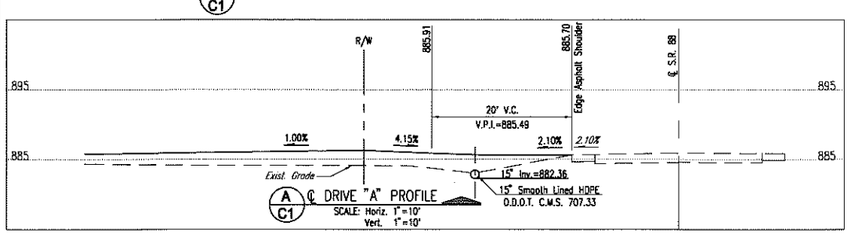

A / C1 ℄ DRIVE "A" PROFILE
SCALE: Horiz. 1"=10'
Vert. 1"=10'

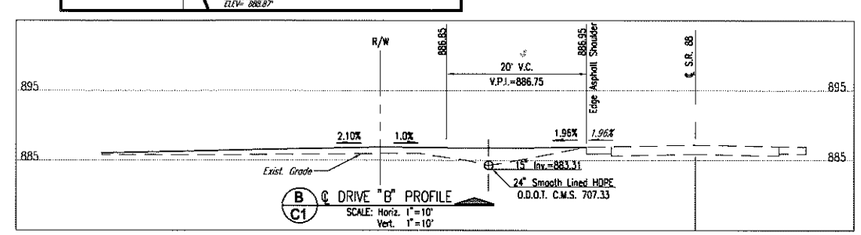

B / C1 ℄ DRIVE "B" PROFILE
SCALE: Horiz. 1"=10'
Vert. 1"=10'

BAKER, BEDNAR & ASSOCIATES, INC.
Architects & Planners
[illegible]
Phone: [illegible]
Fax: [illegible]
E-mail: [illegible]

MECHANICAL / ELECTRICAL & PLUMBING CONSULTANT
Phoenix Design & Engineering
Phone: [illegible]
Fax: [illegible]

CIVIL CONSULTANT
LYNN, KITTINGER & NOBLE
Phone: [illegible]
Fax: [illegible]

STATE OF OHIO
ROBERT J. KUSZMAUL
E-52846
REGISTERED
PROFESSIONAL ENGINEER

BRISTOL TOWNSHIP
VOLUNTEER FIRE DEPARTMENT
STATION NO.17

REVISIONS:

DRAWN BY: RJK

DATE: January 5, 2010

PROJECT NUMBER 09062

SHEET NUMBER
C1
Grading & Drainage Plan

N

0 20'
Scale: 1" = 20'

2 WORKING DAYS
BEFORE YOU DIG
CALL TOLL FREE 800-362-2764
OHIO UTILITIES PROTECTION SERVICE

UTILITY CONTACTS

ELECTRIC:
Ohio Edison
Mike Beck
730 South Avenue
Youngstown, Ohio 44502
PH: 330-740-7704
To make application for new service call: 1-800-633-4766

TELEPHONE:
CenturyLink
Chuck Mansell
3801 Elm Road
Warren, Ohio 44483
PH: 330-841-1408

GAS:
Orwell Natural Gas Company
Bronwyn Davis
95 East Main Street
Orwell, Ohio 44076
PH: 440-346-1824

Notes:
Verify utility connection points with architectural plans.
Coordinate Gas, Telephone and Electric service to the building with the Architect, Owner and Utility Company.

See Plan Sheet ES1.0 for Site Lighting

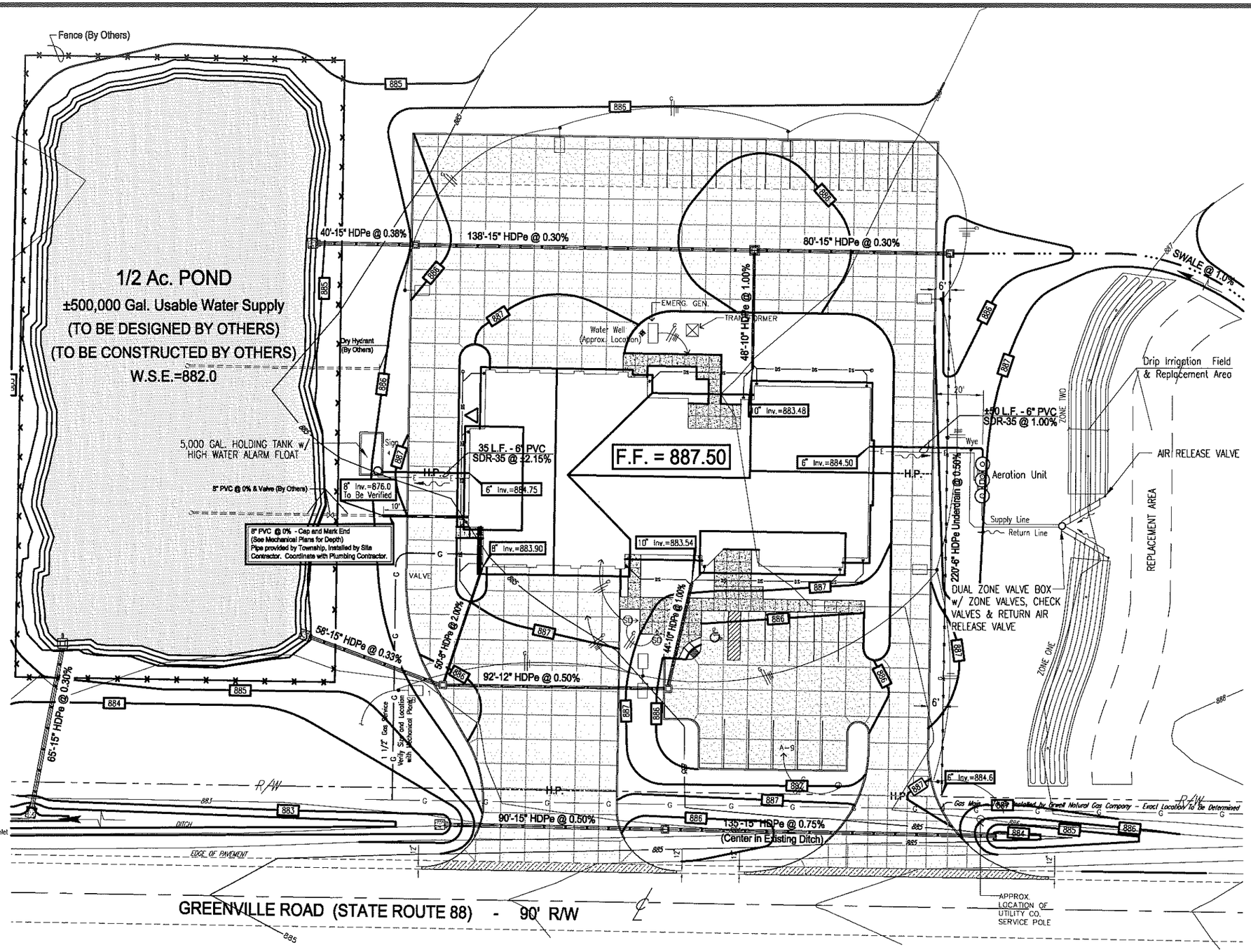

LEGEND

	Iron Pin Found	MH.	Manhole
	Swale/Ditch		Catch Basin/Inlet
	Toe or Top	F.H.	Fire Hydrant
W	Water Mains	W.V.	Water Valve
E	Aerial Electric	G.V.	Gas Valve
G	Gas Mains		Light Pole
T	Telephone Lines		Tele. Pole
E/T	Electric & Telephone Lines		Power Pole
X	Fence		Service Pole
S	Sanitary Sewer		Pole w Anchor
ST	Existing Storm Sewer	1010	Existing Contour
	Proposed Storm Sewer & Catch Basin	1010	Proposed Contour
TC	Top of Curb		Slope Line
NG	Normal Gutter	1010.00TC / 1009.5NG	Proposed Spot Elevation
TP	Top of Pavement	1069.14	Proposed Spot Elevation
HP	High Point		

UTILITY PLAN

0 20 40
GRAPHIC SCALE
(IN FEET)

BAKER, BEDNAR & ASSOCIATES, INC.
Architects & Planners
[illegible]

MECHANICAL / ELECTRICAL & PLUMBING CONSULTANT
Phoenix Design & Engineering
Phone: [illegible]
Fax: [illegible]

CIVIL CONSULTANT
LYNN, KITTINGER & NOBLE
Phone: [illegible]
Fax: [illegible]

STATE OF OHIO
ROBERT J. KUSZMAUL
E-52846
REGISTERED PROFESSIONAL ENGINEER

BRISTOL TOWNSHIP
VOLUNTEER FIRE DEPARTMENT
STATION NO.17

REVISIONS:

DRAWN BY: RJK
DATE: January 5, 2010
PROJECT NUMBER 08062
SHEET NUMBER
C2
Utility Plan

GENERAL NOTES

PROJECT SPECIFICATIONS

ALL MATERIAL AND CONSTRUCTION METHODS REQUIRED TO COMPLETE THIS IMPROVEMENT SHALL BE PERFORMED IN STRICT ACCORDANCE WITH THE DETAILED CONSTRUCTION PLANS AND SPECIFICATIONS, AND THE CURRENT OHIO DEPARTMENT OF TRANSPORTATION (ODOT) CONSTRUCTION AND MATERIAL SPECIFICATIONS (CMS). IN THE EVENT OF A CONFLICT BETWEEN SPECIFICATIONS/REQUIREMENTS, THE MORE STRINGENT OF THE TWO WILL GOVERN, AS DETERMINED BY THE ENGINEER. THE OHIO DEPARTMENT OF TRANSPORTATION STANDARD CONSTRUCTION DRAWINGS SHALL APPLY FOR ODOT ITEMS REFERENCED IN THE PLANS.

PROJECT SAFETY

THE CONTRACTOR SHALL MAINTAIN A SAFE WORKING ENVIRONMENT AT THE PROJECT SITE AT ALL TIMES. THE CONTRACTOR SHALL PROPERLY SUPPORT AND/OR MAINTAIN ALL EXCAVATIONS PER APPLICABLE SAFETY REQUIREMENTS AND COMPLY WITH ALL OSHA REGULATIONS. THIS SHALL INCLUDE STRICT COMPLIANCE WITH ALL APPLICABLE REGULATIONS/REQUIREMENTS REGARDING TRENCH SAFETY. ADEQUATE BARRICADES, WARNING LIGHTS, SIGNS, FENCING, ETC., SHALL BE ERECTED AROUND THE CONSTRUCTION AREA DURING ALL NON-WORKING HOURS TO ALERT PERSONS TO THE POTENTIAL DANGER ASSOCIATED WITH THE AREA UNDER CONSTRUCTION AS WELL AS TO PREVENT ACCESS TO UNAUTHORIZED PERSONNEL TO THE CONSTRUCTION SITE. TRENCHES SHALL BE BACKFILLED AT THE END OF EACH WORKING DAY OR PROPERLY SECURED AS APPROVED BY THE ENGINEER. IT SHALL BE THE CONTRACTOR'S RESPONSIBILITY TO ENSURE THE SAFETY OF THE GENERAL PUBLIC AS WELL AS ALL CONSTRUCTION PERSONNEL. PUBLIC STREETS SHALL BE KEPT CLEAN AND FREE OF DEBRIS (MUD, STONE, ETC.) AT ALL TIMES. THE CONTRACTOR SHALL CONTACT ALL LOCAL EMERGENCY AGENCIES TO THE NATURE OF THE PROPOSED PROJECT PRIOR TO BEGINNING ANY CONSTRUCTION ACTIVITY. ACCESS FOR EMERGENCY VEHICLES SHALL BE MAINTAINED AT ALL TIMES.

PROTECTION OF UTILITIES

THE LOCATION OF UNDERGROUND UTILITIES SHOWN ON THE PLANS HAVE BEEN OBTAINED BY FIELD CHECKS AND RECORDS FURNISHED BY THE UTILITY COMPANIES, HOWEVER THEIR ACCURACY OR COMPLETENESS SHALL NOT BE CONSTRUED AS ABSOLUTE. THE INVESTIGATION, LOCATION, SUPPORT, PROTECTION AND RESTORATION OF ALL EXISTING UTILITIES AND APPURTENANCES SHALL BE THE RESPONSIBILITY OF THE CONTRACTOR. THE CONTRACTOR SHALL TAKE ALL PRECAUTIONS NECESSARY TO LOCATE, ISOLATE, PROTECT, AND SUPPORT ANY EXISTING UTILITIES WITHIN OR ADJACENT TO THE PROJECT SITE WHICH MAY BE ENCOUNTERED DURING THE COMPLETION OF THE PROPOSED IMPROVEMENTS. UTILITIES MUST BE KEPT IN SERVICE AT ALL TIMES. IF THERE IS ANY CONFLICT BETWEEN EXISTING UTILITIES AND THE PROPOSED WORK, THE ENGINEER SHALL BE PROMPTLY NOTIFIED SO A SOLUTION CAN BE DETERMINED.

TEMPORARY SEEDING AND MULCHING

THE CONTRACTOR SHALL BE RESPONSIBLE TO SEED AND MULCH WITHIN SEVEN (7) DAYS ALL DISTURBED AREAS WHERE CONSTRUCTION ACTIVITY HAS OCCURRED BUT WILL TEMPORARILY REMAIN IDLE FOR A PERIOD OF MORE THAN 21 DAYS, AND THOSE DISTURBED AREAS WHERE EROSION MAY BECOME A PROBLEM AS DETERMINED BY THE ENGINEER.

MAINTAINING TRAFFIC

THE CONTRACTOR SHALL MAINTAIN TRAFFIC ADJACENT TO THE PROJECT AS DESCRIBED BELOW IN ACCORDANCE WITH THE REQUIREMENTS OF THE OHIO DEPARTMENT OF TRANSPORTATION MANUAL OF CONSTRUCTION AND MATERIALS SPECIFICATIONS ITEM 614 MAINTAINING TRAFFIC. THE CONTRACTOR SHALL FURNISH & MAINTAIN ALL SIGNS, FLAGS, FLAG PERSONS, BARRICADES, SIGN SUPPORTS, CONES, BARRELS, AND INCIDENTALS IN CONFORMANCE WITH THE MOST RECENT REVISED EDITION OF THE OHIO MANUAL OF UNIFORM TRAFFIC CONTROL DEVICES FOR STREETS AND HIGHWAYS. INTERFERENCE WITH TRAFFIC SHALL BE KEPT MINIMAL AT ALL TIMES. ALL OPEN TRENCHES AND EXCAVATIONS SHALL BE PROTECTED WITH DRUMS, BARRICADES, OR BARRIERS AT ALL TIMES.

TEMPORARY SOIL EROSION AND SEDIMENT CONTROL

THE CONTRACTOR SHALL PREVENT AND/OR REDUCE AND CONTROL SOIL EROSION RESULTING FROM THE PROPOSED IMPROVEMENTS. THE USE OF SILT FENCING, JUTE MATTING, TEMPORARY SEEDING, SILT CHECKS, INLET PROTECTION AROUND CATCH BASINS, STABILIZED CONSTRUCTION ENTRANCE(S), ETC. MAY BE REQUIRED. SEDIMENT CONTROL STRUCTURES/DEVICES SHALL BE INSTALLED IN ACCORDANCE WITH THE MANUAL RAINWATER AND LAND DEVELOPMENT - OHIO'S STANDARDS FOR STORM WATER MANAGEMENT, LAND DEVELOPMENT AND URBAN STREAM PROTECTION, SECOND EDITION DATED 1996. SEDIMENT CONTROL DEVICES MUST BE INSTALLED PRIOR TO BEGINNING ANY CONSTRUCTION ACTIVITY. THE CONTRACTOR SHALL BE RESPONSIBLE FOR CONTINUED INSPECTION AND MAINTENANCE OF ALL SEDIMENT CONTROL DEVICES.

RESTORATION OF DISTURBED AREAS

EXISTING DRIVES, BERMS, LAWNS, PAVEMENTS, CURBS, SIDEWALKS, SIGNS OR OTHER APPURTENANCES DISTURBED DURING CONSTRUCTION BUT NOT SPECIFICALLY DESIGNATED FOR REMOVAL/REPLACEMENT SHALL BE RESTORED TO A CONDITION EQUAL TO THAT WHICH EXISTED PRIOR TO CONSTRUCTION AND TO THE COMPLETE SATISFACTION OF THE OWNER. RESTORATION OF EXISTING ROADWAYS SHALL BE IN ACCORDANCE WITH THE GOVERNING AGENCY HAVING AUTHORITY. THE COST FOR THE RESTORATION OF THESE ITEMS SHALL BE SOLELY THE CONTRACTORS RESPONSIBILITY. NO PUBLIC ROADWAY SHALL BE DISTURBED WITHOUT PRIOR WRITTEN APPROVAL OF THE GOVERNING AGENCY AND HAVING ALL APPLICABLE PERMITS OBTAINED.

EASEMENTS AND RIGHT OF WAYS

THE CONTRACTOR SHALL STAY WITHIN THE PROPERTIES, EASEMENTS, WORK LIMITS, AND RIGHTS OF WAY PROVIDED AT ALL TIMES. NO MATERIAL IS PERMITTED TO BE STORED ON ADJACENT PROPERTIES UNLESS PRIOR WRITTEN PERMISSION HAS BEEN GRANTED.

ELECTRIC, GAS & TELEPHONE SERVICE

PROVISIONS FOR ELECTRIC, GAS AND TELEPHONE SERVICE TO THE BUILDINGS SHALL BE COORDINATED BETWEEN THE ARCHITECT, OWNER, CONTRACTOR AND UTILITY COMPANIES.

2 WORKING DAYS
BEFORE YOU DIG
CALL TOLL FREE 800-362-2764
OHIO UTILITIES PROTECTION SERVICE

PAVEMENT JOINTS

ALL ASPHALT PAVEMENT BUTT JOINTS SHALL BE NEAT, STRAIGHT LINES AND SEALED WITH APPROPRIATE ASPHALT SEALER.

SURFACE SLOPES

MAXIMUM SURFACE SLOPES IN HANDICAP PARKING AREAS SHALL BE 1:50 (2%) IN ALL DIRECTIONS. THE DRAINAGE PATTERN CREATED BY THIS PROJECT SHALL BE CONSISTENT WITH THE EXISTING STORM WATER DRAINAGE PATTERN EXCEPT THAT GRADES SHALL BE MODIFIED TO ELIMINATE AREAS OF PONDING WATER. THERE SHALL BE NO INCREASE IN STORM WATER RUNOFF TO ADJACENT PARCELS.

POSITIVE DRAINAGE

THE CONTRACTOR SHALL ASSURE THAT THERE IS POSITIVE DRAINAGE THROUGHOUT THE PROJECT AND THAT NO PONDING OF STORM WATER WILL OCCUR. SOME ELEVATIONS AND/OR GRADES MAY HAVE TO BE ADJUSTED TO ACHIEVE THIS.

PAVEMENT MARKING

PAVEMENT MARKINGS SHALL CONFORM TO THE CURRENT OHIO MANUAL OF UNIFORM TRAFFIC CONTROL DEVICES.

STABILIZATION - SEEDING AND MULCHING

ALL AREAS DISTURBED DURING CONSTRUCTION (INCLUDING EXPOSED SURFACES OF THE EMBANKMENT, EXCAVATION, SPOIL AND BORROW AREAS, BERMS, ETC.), SHALL BE STABILIZED BY SEEDING, LIMING, FERTILIZING, MULCHING, ETC., IN ACCORDANCE WITH ODOT ITEM 659, SEEDING AND MULCHING. STABILIZATION SHALL OCCUR WITHIN SEVEN (7) DAYS FOLLOWING THE COMPLETION OF THE IMPROVEMENTS.

ELEVATIONS AND GRADES

SOME ELEVATIONS AND GRADES MAY HAVE TO BE ADJUSTED TO MEET ACTUAL FIELD CONDITIONS.

PROPOSED GRADES

ALL PROPOSED GRADES SHOWN ARE TO THE TOP OF CURB, WALK, ASPHALT PAVEMENT OR FINISHED GROUND.

CATCH BASIN GRATES

ALL CATCH BASIN GRATES LOCATED WITHIN PAVED AREAS SHALL BE "BICYCLE SAFE" SUCH AS EAST JORDAN IRON WORKS NO. 5110 TYPE M3 OR APPROVED EQUAL.

STORM SEWERS

STORM SEWER PIPE SHALL BE CORRUGATED HIGH DENSITY POLYETHYLENE SMOOTH LINED PIPE IN ACCORDANCE WITH ODOT CMS SECTION 707.33. PIPE AND FITTINGS SHALL CONFORM TO AASHTO M294, TYPE S, SP, OR D.

CONCRETE

ALL CONCRETE SHALL BE ODOT CLASS C (CMS ITEM 499) DEVELOPING A CONCRETE COMPRESSIVE STRENGTH AT 28 DAYS OF 4,000 POUNDS PER SQUARE INCH. NOMINAL SLUMP RANGE IS 1 TO 3 INCHES WITH A MAXIMUM SLUMP OF 4 INCHES. CONCRETE SHALL HAVE AN AIR CONTENT OF 6 ±2%.

EMBANKMENT

ONLY SUITABLE SOIL FREE OF ORGANIC MATERIAL SHALL BE USED FOR EMBANKMENT UNDER THE BUILDING, DRIVE, PARKING AREAS AND WALKS (STRUCTURAL FILL). STRUCTURAL FILL SHALL CONSIST OF NON-EXPANSIVE MATERIALS. PYRITIC AND/OR POTENTIALLY EXPANSIVE MATERIALS, SUCH AS MINE TAILINGS, SHALES AND SLAG SHOULD NOT BE USED AS STRUCTURAL FILL. SOIL IS SUITABLE FOR USE IN EMBANKMENT IF IT HAS THE FOLLOWING CHARACTERISTICS:

- STANDARD PROCTOR MAXIMUM DRY DENSITY GREATER THAN 105 POUNDS PER CUBIC FOOT (PCF)
- ATTERBERG LIQUID LIMIT LESS THAN 40
- PLASTICITY INDEX OF LESS THAN 15
- MAXIMUM PARTICLE SIZE OF 4 INCHES OR LESS

SOILS IDENTIFIED AS OHIO CLASSIFICATIONS A-2-5, A-5 OR A-7-5 ARE CONSIDERED AS UNSUITABLE FOR USE IN EMBANKMENT.

CONSTRUCTION METHODS

EMBANKMENT MATERIALS SHALL BE SPREAD IN SUCCESSIVE LOOSE LAYERS NOT TO EXCEED 8 INCHES IN THICKNESS. THE LAYERS THUS PLACED SHALL BE COMPACTED TO PROVIDE NOT LESS THAN THE FOLLOWING PERCENTAGES OF MAXIMUM DENSITY OF SOIL MATERIAL COMPACTED AT OPTIMUM MOISTURE CONTENT ACCORDING TO MODIFIED PROCTOR ANSI/ASTM D-1557:

STRUCTURES, BUILDING SLABS, PAVEMENTS, WALKS AND STEPS: COMPACT EACH 8" LAYER TO 95% MAXIMUM DENSITY.

LANDSCAPED AREAS AND UNPAVED AREAS: COMPACT EACH 8" LAYER TO 90% MAXIMUM FOR COHESIONLESS MATERIAL AND 85% MAXIMUM DRY DENSITY FOR COHESIVE MATERIAL.

IN CUT AREAS THE SUBGRADE MUST MEET THE DENSITY CRITERIA EQUIVALENT TO THOSE SPECIFIED ABOVE FOR FILL AREAS UNDER THE VARIOUS CLASSIFICATIONS.

SITEWORK SHALL BE PERFORMED IN ACCORDANCE WITH THE RECOMMENDATIONS LISTED IN THE REPORT PREPARED BY PROFESSIONAL SERVICE INDUSTRIES, INC. TITLED "GEOTECHNICAL ENGINEERING SERVICES REPORT - PROPOSED BUILDING STRUCTURE - VOLUNTEER FIRE DEPARTMENT STATION NO. 17 - 2100 STATE ROUTE 88 - BRISTOL TOWNSHIP, TRUMBULL COUNTY, OHIO - PSI PROJECT NO. 0139291" AND DATED JANUARY 5, 2010.

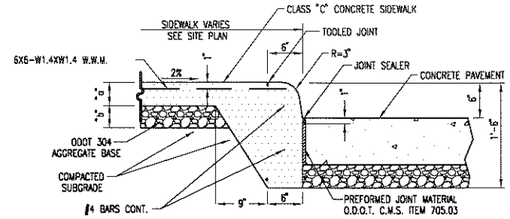

LOCATION	"a"	"b"
STANDARD SIDEWALKS	4"	4"

INTEGRAL CURB/WALK DETAIL

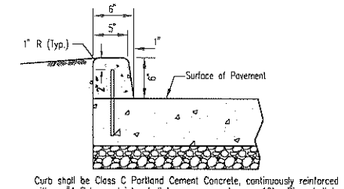

Curb shall be Class C Portland Cement Concrete, continuously reinforced with a #4 Rebar. Joints shall be sawn or cut every 10'. Pins shall be placed on each side of the joint as shown.

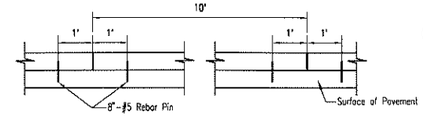

(E/C1) EXTRUDED CURB

ADD ALTERNATE #1 - INSTALL ODOT TYPE 6 CURB IN LIEU OF EXTRUDED CURB WHERE SHOWN (THROUGHOUT PROJECT)

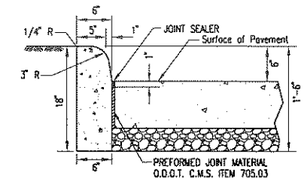

(F/C1) ODOT TYPE 6 CURB

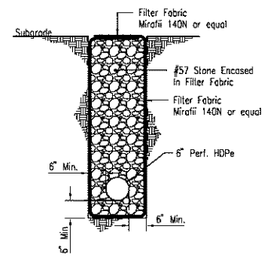

UNDERDRAIN TYPICAL TRENCH SECTION

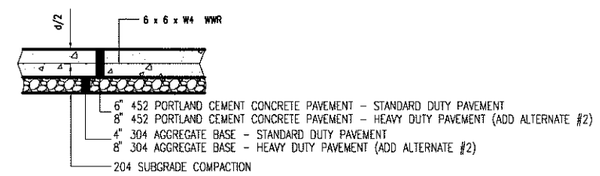

TYPICAL FULL DEPTH PORTLAND CEMENT CONCRETE PAVEMENT SECTION

NO SCALE

MAXIMUM TRENCH WIDTHS	
PIPE SIZE	WIDTH
6" - 24"	O.D. + 2'-0"
27" - 30"	O.D. + 2'-6"
36" & OVER	O.D. + 3'-0"

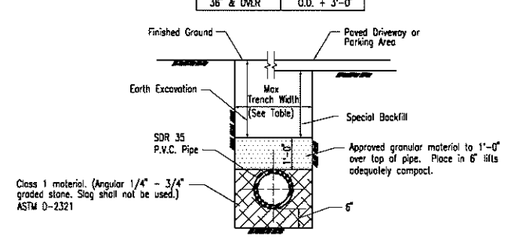

P.V.C. SANITARY SEWER PIPE TYPICAL TRENCH SECTION

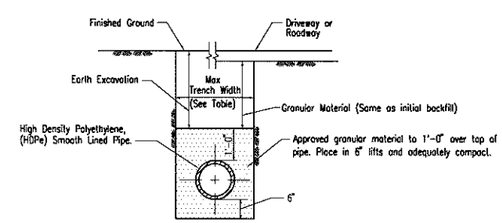

FLEXIBLE PIPE TYPICAL TRENCH SECTION

MISCELLANEOUS DETAILS AND GENERAL NOTES

BAKER, BEDNAR & ASSOCIATES, INC.
Architects & Planners
[illegible]
Phone: [illegible]
Fax: [illegible]
E-mail: [illegible]

MECHANICAL / ELECTRICAL & PLUMBING CONSULTANT
Phoenix Design & Engineering
Phone: [illegible]
Fax: [illegible]

CIVIL CONSULTANT
LYNN, KITTINGER & NOBLE
Phone: [illegible]
Fax: [illegible]

STATE OF OHIO ROBERT J. KUSZMAUL E-52846 REGISTERED PROFESSIONAL ENGINEER

BRISTOL TOWNSHIP
VOLUNTEER FIRE DEPARTMENT
STATION NO.17

REVISIONS:

DRAWN BY: RJK
DATE: January 5, 2010
PROJECT NUMBER 09062

SHEET NUMBER
C3
Miscellaneous Details & General Notes

GRATE NOTE:
ALL CATCH BASIN GRATES SHALL BE EAST JORDAN NO. 5110 TYPE M3 OR APPROVED EQUAL. THE GRATES SHALL SET ON AN ANGLE IRON FRAME WHICH IS CAST INTO THE CATCH BASIN LID.

DETENTION POND OUTLET STRUCTURE

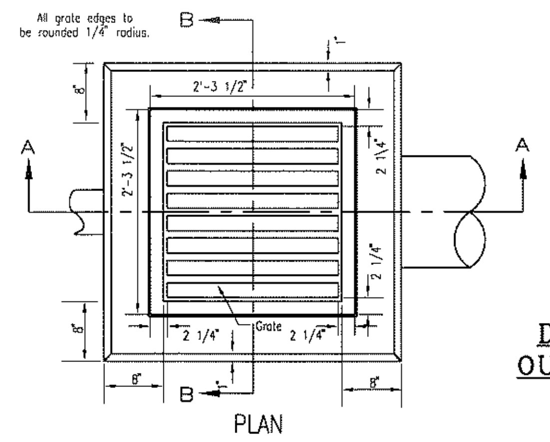

PLAN

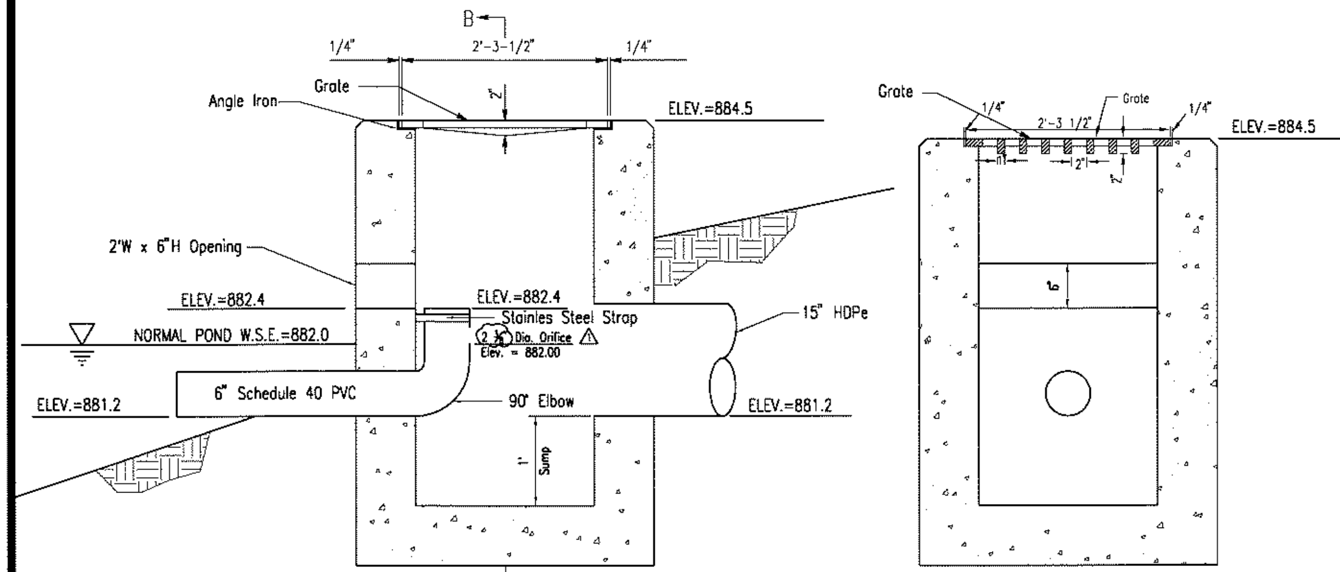

SECTION B-B

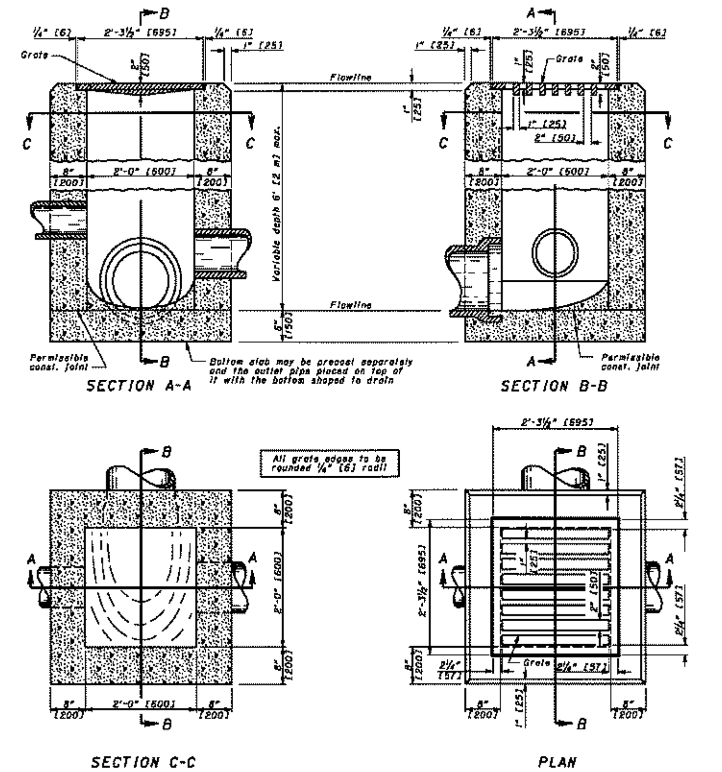

CATCH BASIN No. 2-2B

NOTES

CATCH BASINS 2-2A & B: This sheet depicts Catch Basin 2-2B. See Sheet 1 of 2 for Catch Basin 2-2A.

GRATE: The design shall be essentially the same and equally as strong as the one shown (see construction information table), or meet the requirements of CMS 711.14. Grate openings and dimensions shall not differ from those shown unless otherwise shown in the plans.

If necessary, bicycle safe grates shall be specifed in the plans. Bicycle safe grates shall be Neenah No. R-4859-C or East Jordan No. 5110 Type M3 or approved equals.

As of January 1, 2003, the following text shall be cast into the top of the grate:

"DUMP NO WASTE" and "DRAINS TO WATERWAY"

Text shall be printed in bold, capital letters with a minimum height of ½". "WATERWAY" may be substituted with "STREAM","RIVER","LAKE", etc. Actual placement and logo may vary per manufacturer.

WALLS: Brick or cast-in-place walls have a nominal thickness of 8" [200]. Precast walls shall have a minimum thickness of 6" [150] and be reinforced sufficiently to permit shipping and handling without damage.

CONCRETE: Cast-in-place concrete is to be Class C. All precast concrete shall meet the requirements of CMS 706.13 and be marked with the catch basin number.

PRECAST BASE: If a precast base is used, it shall be set deep enough so that the top can be placed on the base to provide the grate elevation specified in the plans. Layers of brick shall not be used to adjust the top elevation.

LOCATION AND ELEVATION: When given on the plans, location and elevation are at the top center of the grate. When side openings are provided, the elevation shall be at the flow line of the side inlet.

MINIMUM DEPTH: The minimum depth for CB No. 2-2B shall be the O.D. of the outlet pipe plus 4" [100].

2-2B GRATE ELEVATION: Grate elevation is to be placed 4" to 6" [100 to 150] below normal ditch returning to normal 10' to 15' [3 m to 5 m] each side of inlet.

OPENINGS: Pipe openings shall be the O.D. of the pipe being supplied plus 2" [50] when fabricated or field cut. The interstitial space shall be filled with grout per CMS 601.

PAYMENT: All materials and labor, including excavation and backfilling, shall be paid for under Item 604 - Catch Basin, No. 2-2B.

CONSTRUCTION INFORMATION
Minimum weight (mass) of grate, 120 lbs. [54 kg]

CATCH BASIN	OUTLET PIPE SIZE
2-2A	12" to 21" [300 to 525]
2-2B	12" to 21" [300 to 525]

OHIO DEPARTMENT OF TRANSPORTATION — ENGINEER OF BRIDGES
DATE 7-20-01 7-19-02
HYDRAULIC ENGINEER D. Gruver
All metric dimensions (in brackets [ ]) are in millimeters unless otherwise noted.
OFFICE OF STRUCTURAL ENGINEERING
STANDARD HYDRAULIC CONSTRUCTION DRAWING CATCH BASINS No's 2-2A & B
NUMBER CB-1.1
2/2

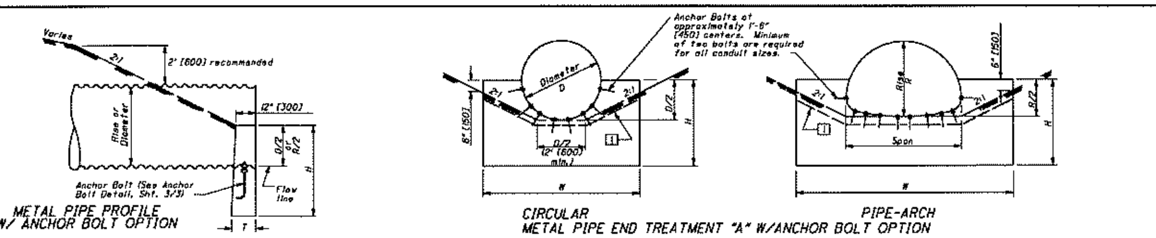

METAL PIPE PROFILE W/ ANCHOR BOLT OPTION

CIRCULAR — PIPE-ARCH
METAL PIPE END TREATMENT "A" W/ANCHOR BOLT OPTION

CAST IN PLACE HW FOR CORRUGATED METAL PIPE & PLASTIC PIPE (English)																
CIRCULAR					PIPE ARCH						PIPE ARCH					
D	W	H	T	CONC. cu. yds.	SPAN	RISE	W	H	T	CONC. cu. yds.	SPAN	RISE	W	H	T	CONC. cu. yds.
12"	2'-0"	3'-0"	12"	0.21	2.67"x½" Corrugations						*81"	59"	12'-4"	5'-5"	15"	2.14
15"	2'-6"	3'-2"	12"	0.27	17"	13"	3'-0"	3'-0"	12"	0.31	87"	63"	13'-0"	5'-7"	17"	2.50
18"	3'-0"	3'-3"	12"	0.33	21"	15"	3'-6"	3'-0"	12"	0.35	95"	67"	14'-0"	5'-9"	20"	3.14
21"	3'-6"	3'-4"	12"	0.39	24"	18"	4'-0"	3'-2"	12"	0.43	103"	71"	15'-0"	5'-11"	22"	3.54
24"	4'-0"	3'-6"	12"	0.46	28"	20"	4'-6"	3'-3"	12"	0.48	112"	75"	16'-0"	6'-1"	24"	3.96
27"	4'-6"	3'-8"	12"	0.53	35"	24"	5'-6"	3'-5"	12"	0.61	117"	79"	17'-9"	6'-3"	25"	4.89
30"	5'-0"	3'-9"	12"	0.60	42"	29"	6'-6"	3'-7"	12"	0.73	128"	83"	18'-0"	6'-5"	26"	5.01
33"	5'-6"	3'-10"	12"	0.68	49"	33"	7'-8"	3'-9"	12"	0.90	137"	87"	19'-0"	6'-7"	27"	5.45
36"	6'-0"	4'-0"	12"	0.76	57"	38"	9'-0"	4'-0"	12"	1.10	142"	91"	20'-9"	6'-9"	27"	6.31
39"	6'-6"	4'-2"	12"	0.84	64"	43"	10'-0"	4'-4"	12"	1.31	6"x2" Corrugations (18" Corner Radius)					
42"	7'-0"	4'-3"	12"	0.92	71"	47"	11'-0"	4'-8"	12"	1.54						
48"	8'-0"	4'-6"	12"	1.10	*77"	52"	11'-8"	5'-3"	12"	1.84	*6'-1"	4'-7"	11'-8"	5'-7"	12"	1.89
54"	9'-3"	4'-9"	12"	1.33	*83"	57"	12'-4"	5'-5"	15"	2.46	*6'-4"	4'-9"	12'-0"	5'-8"	14"	2.12
60"	10'-6"	5'-6"	12"	1.78	6"x2" Corrugations (31" Corner Radius)						*6'-9"	4'-11"	12'-4"	5'-9"	15"	2.42
66"	11'-9"	5'-9"	12"	2.06							*7'-0"	5'-1"	12'-8"	5'-10"	16"	2.44
72"	13'-0"	6'-0"	12"	2.37	13'-3"	9'-4"	23'-11"	7'-11"	32"	9.63	7'-3"	5'-3"	12'-11"	5'-11"	17"	2.69
78"	14'-3"	6'-3"	14"	2.94	13'-6"	9'-6"	24'-9"	8'-0"	32"	10.12	7'-8"	5'-5"	13'-2"	6'-0"	18"	2.77
84"	15'-6"	6'-6"	14"	3.30	14'-0"	9'-8"	24'-10"	8'-1"	33"	10.33	7'-11"	5'-7"	14'-0"	6'-1"	20"	3.15
90"	16'-9"	6'-9"	16"	4.00	14'-2"	9'-10"	25'-9"	8'-2"	33"	10.87	8'-2"	5'-9"	14'-8"	6'-2"	21"	3.45
96"	18'-0"	7'-0"	16"	4.40	14'-5"	10'-0"	26'-7"	8'-3"	33"	11.39	8'-7"	5'-11"	15'-0"	6'-3"	22"	3.75
102"	19'-3"	7'-3"	18"	5.28	14'-11"	10'-2"	26'-9"	8'-4"	34"	11.88	8'-10"	6'-1"	15'-10"	6'-4"	23"	4.15
108"	20'-6"	7'-6"	20"	6.21	15'-4"	10'-4"	26'-11"	8'-5"	34"	11.95	9'-4"	6'-3"	16'-0"	6'-5"	24"	4.65
114"	21'-9"	7'-9"	22"	7.25	15'-7"	10'-8"	27'-9"	8'-6"	34"	12.51	9'-6"	6'-5"	16'-10"	6'-6"	26"	4.93
120"	23'-0"	8'-0"	24"	8.38	15'-10"	10'-8"	28'-7"	8'-7"	35"	13.06	9'-9"	6'-7"	17'-9"	6'-7"	27"	5.41
*126"	23'-0"	8'-3"	26"	8.64	16'-3"	10'-10"	28'-8"	8'-8"	35"	13.34	10'-3"	6'-9"	17'-10"	6'-8"	27"	5.45
132"	23'-0"	8'-6"	28"	9.23	16'-6"	11'-0"	29'-7"	8'-9"	35"	13.94	10'-8"	6'-11"	17'-11"	6'-9"	27"	5.59
138"	24'-1"	8'-9"	30"	10.50	17'-0"	11'-2"	29'-8"	8'-10"	36"	14.24	10'-11"	7'-1"	18'-10"	6'-10"	28"	5.97
144"	25'-2"	9'-0"	32"	11.89	17'-2"	11'-4"	30'-7"	8'-11"	36"	14.84	11'-5"	7'-3"	18'-11"	6'-11"	28"	6.12
150"	26'-4"	9'-3"	34"	13.38	17'-5"	11'-6"	31'-5"	9'-0"	36"	15.42	11'-7"	7'-5"	19'-9"	7'-0"	28"	6.52
156"	27'-5"	9'-6"	36"	15.01	17'-11"	11'-8"	31'-7"	9'-1"	37"	15.83	11'-10"	7'-7"	20'-9"	7'-1"	29"	6.94
162"	28'-7"	9'-9"	38"	16.75	18'-1"	11'-10"	32'-5"	9'-2"	37"	16.43	12'-4"	7'-9"	20'-10"	7'-2"	29"	7.12
168"	29'-8"	10'-0"	40"	18.61	18'-7"	12'-0"	32'-6"	9'-3"	37"	16.78	12'-6"	7'-11"	21'-8"	7'-3"	29"	7.53
174"	30'-9"	10'-3"	42"	20.28	18'-9"	12'-2"	33'-4"	9'-4"	38"	17.43	12'-8"	8'-1"	22'-7"	7'-4"	30"	7.95
180"	31'-11"	10'-6"	43"	21.87	19'-3"	12'-4"	33'-5"	9'-5"	38"	17.78	12'-10"	8'-4"	23'-7"	7'-5"	30"	8.48
186"	33'-0"	10'-9"	44"	23.54	19'-6"	12'-6"	34'-5"	9'-6"	38"	18.49	13'-5"	8'-5"	23'-7"	7'-6"	30"	8.63
192"	34'-2"	11'-0"	45"	25.30	19'-8"	12'-8"	35'-3"	9'-7"	39"	19.19	13'-11"	8'-7"	23'-7"	7'-7"	31"	8.81
198"	35'-3"	11'-3"	46"	27.12	19'-11"	12'-10"	36'-3"	9'-8"	39"	19.95	14'-1"	8'-9"	25'-1"	7'-8"	31"	9.29
204"	36'-4"	11'-6"	47"	29.15	20'-5"	13'-0"	36'-3"	9'-9"	39"	20.30	14'-3"	8'-11"	25'-6"	7'-9"	31"	9.78
210"	37'-6"	11'-9"	48"	31.03	20'-7"	13'-2"	37'-2"	9'-10"	40"	21.05	14'-10"	9'-1"	25'-6"	7'-10"	32"	10.25
216"	38'-7"	12'-0"	49"	33.43	3"x1" Corrugations						15'-4"	9'-3"	25'-6"	7'-11"	32"	10.25
222"	39'-9"	12'-3"	50"	36.26	40"	31"	6'-6"	3'-7"	12"	0.70	15'-6"	9'-5"	26'-5"	8'-0"	32"	10.74
228"	40'-10"	12'-8"	51"	37.52	46"	36"	7'-8"	3'-9"	12"	0.85	15'-8"	9'-7"	27'-5"	8'-1"	33"	11.28
234"	42'-0"	12'-9"	52"	39.86	53"	41"	9'-0"	4'-0"	12"	1.06	15'-10"	9'-10"	28'-5"	8'-2"	33"	12.00
240"	43'-1"	13'-0"	53"	42.28	60"	46"	10'-0"	4'-4"	12"	1.27	16'-5"	9'-11"	28'-5"	8'-3"	33"	12.09
246"	44'-2"	13'-3"	54"	44.83	66"	51"	11'-0"	4'-8"	12"	1.54	16'-7"	10'-1"	29'-4"	8'-4"	34"	12.64
252"	45'-4"	13'-6"	55"	47.44	*73"	55"	11'-8"	5'-3"	12"	1.81	--	--	--	--	--	--

* Channel configuration for pipe sizes between end treatment "A" and end treatment "B" is determined by 2:1 slopes passing through a point 6" [150] below the top and at each side of the headwall. For end treatment "B", 2:1 slopes are tangent to pipe.

① Top surface of 6" [150] inlet headwall extension

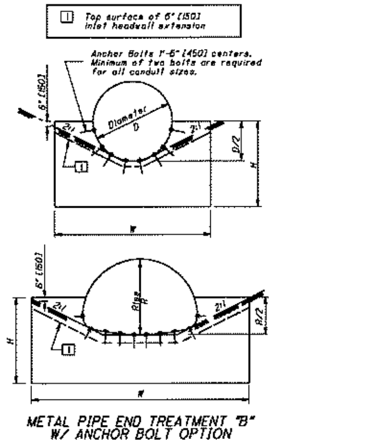

METAL PIPE END TREATMENT "B" W/ ANCHOR BOLT OPTION

See Sht. 2/3 for Metric Pipe Table

OHIO DEPARTMENT OF TRANSPORTATION — ENGINEER OF BRIDGES
DATE 07-21-01 07-19-02 07-15-05 01-20-06
HYDRAULIC ENGINEER
ALL METRIC DIMENSIONS (IN BRACKETS [ ]) ARE IN MILLIMETERS UNLESS OTHERWISE NOTED.
OFFICE OF STRUCTURAL ENGINEERING
STANDARD HYDRAULIC CONSTRUCTION DRAWING HALF-HEIGHT HEADWALLS FOR CORRUGATED METAL PIPE & PLASTIC PIPE
NUMBER HW-2.1
1/3

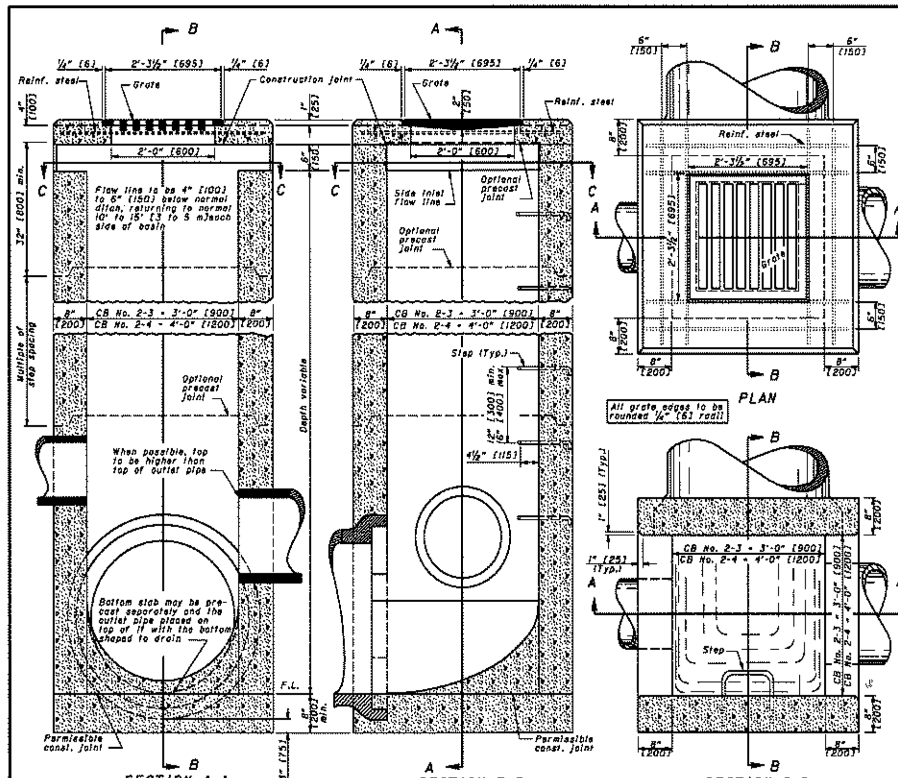

CATCH BASINS No. 2-3 & No. 2-4

NOTES

GRATE: See details on SCD CB-1.1.

If necessary, bicycle safe grates shall be specified in the plans. Bicycle safe grates shall be Neenah No. R-4859-C or East Jordan No. 5110 Type M3 or approved equals.

As of January 1, 2003, the following text shall be cast into the top of the grate:

"DUMP NO WASTE" and "DRAINS TO WATERWAY"

Text shall be printed in bold, capital letters with a minimum height of ½". "WATERWAY" may be substituted with "STREAM","RIVER","LAKE", etc. Actual placement and logo may vary per manufacturer.

WALLS: Brick or cast-in-place walls shall have a nominal thickness of 8" [200]. Precast walls shall have a minimum thickness of 6" [150] and be reinforced sufficiently to permit shipping and handling without damage. Precast tops shall be 8" [200] thick.

STEPS: Steps shall be provided where the depth exceeds 6' [1.8 m] and shall meet the requirements of SCD MH-1.1.

CONCRETE: Cast-in-place concrete is to be Class C. All precast concrete shall meet the requirements of CMS 706.13 and be marked with the catch basin number.

REINFORCEMENT: Reinforcing in the top is to be #4 [#13M] bars spaced at 6" [150] center to center. For Catch Basin No. 2-3 use eight bars and for Catch Basin No. 2-4 use twelve bars.

INLETS OVER 12 FEET [3.5 m] IN DEPTH: Shall be precast or cast-in place concrete; reinforced with #4 [#13M] bars on 12" [300] centers both vertically and horizontally with 2" [50] clearance from inside wall face.

PRECAST BASE: If a precast base is used, it shall be set deep enough so that the top can be placed on the base to provide the grate elevation specified in the plans. Layers of brick shall not be used to adjust the top elevation.

LOCATION AND ELEVATION: When given on the plans, the location and the elevation are at the top center of the grate. When side openings are provided, the elevation shall be at the flow line of the side inlet.

MINIMUM DEPTH: The minimum depth of CB No. 2-3 and CB No. 2-4 shall be the outside diameter (O.D.) of the outlet pipe plus 7" [175].

OPENINGS: Pipe openings shall be the O.D. of the pipe being supplied plus 2" [50] when prefabricated or field cut. The interstitial space shall be filled with grout per CMS 601.

SIDE INLETS: Inlets shall be provided on both sides of the No. 2-3 and 2-4 catch basin in sags and on upstream side only where the ditch has a continuous down grade past the catch basin. Catch basins with side inlets shall not be used within the Clear Zone.

PAYMENT: All materials and labor, including excavation and backfill, shall be paid for under Item 604 - Catch Basin, No. 2-3 or Item 604 - Catch Basin No. 2-4.

CATCH BASIN	OUTLET PIPE SIZE
2-3	12" to 33" [300 to 825]
2-4	36" to 42" [900 to 1050]

OHIO DEPARTMENT OF TRANSPORTATION — ENGINEER OF BRIDGES
DATE 7-20-01 7-19-02
HYDRAULIC ENGINEER D. Gruver
All metric dimensions (in brackets [ ]) are in millimeters unless otherwise noted.
OFFICE OF STRUCTURAL ENGINEERING
STANDARD HYDRAULIC CONSTRUCTION DRAWING CATCH BASINS No's 2-3 & 2-4
NUMBER CB-1.2
1/1

MISCELLANEOUS DETAILS AND GENERAL NOTES

BAKER, BEDNAR & ASSOCIATES, INC.
Architects & Planners

MECHANICAL / ELECTRICAL & PLUMBING CONSULTANT
Phoenix Design & Engineering

CIVIL CONSULTANT
LYNN, KITTINGER & NOBLE

STATE OF OHIO — ROBERT J. KUSZMAUL E-52846 — REGISTERED PROFESSIONAL ENGINEER

BRISTOL TOWNSHIP
VOLUNTEER FIRE DEPARTMENT
STATION NO.17

REVISIONS:
⚠ INCREASED ORIFICE DIAMETER

DRAWN BY: RJK

DATE: January 5, 2010

PROJECT NUMBER
09062

SHEET NUMBER
C4
Miscellaneous Details & General Notes