# E. FEMA Hurricane Katrina Recovery Advisories

FEMA has prepared a series of Recovery Advisories that present guidance for design, construction, and restoration of buildings in areas subject to coastal flooding and high winds from Hurricane Katrina. To date, eight advisories have been prepared and are included in this appendix:

- Reconstruction Guidance Using Hurricane Katrina Surge Inundation and Advisory Base Flood Elevation Maps
- Initial Restoration for Flooded Buildings
- Design and Construction in Coastal A Zones
- The ABCs of Returning to Flooded Buildings
- Attachment of Brick Veneer in High-Wind Regions
- Attachment of Rooftop Equipment in High-Wind Regions
- Rooftop Attachment of Lightning Protection Systems in High-Wind Regions
- Designing for Flood Levels Above the BFE

These Advisories are also available online at http://www.fema.gov/rebuild/mat/mat_katrina.shtm where future Advisories will also be posted.

# Reconstruction Guidance Using Hurricane Katrina Surge Inundation and Advisory Base Flood Elevations

FEMA

## HURRICANE KATRINA RECOVERY ADVISORY

**Purpose:** To discuss available flood hazard information and to recommend reconstruction practices using Advisory Base Flood Elevations (ABFEs).

## Key Issues

- Following Hurricane Katrina, FEMA updated its flood frequency analyses to include more recent storm surge data (including storm surge stillwater levels measured after Katrina). The results of the analysis show that the updated 1 percent annual chance stillwater levels (also known as the 100-year stillwater levels) are 3 to 8 feet above the stillwater levels previously used to produce the pre-Katrina Flood Insurance Rate Maps (FIRMs).
- For post-Katrina recovery purposes, FEMA devised a method to approximate 1 percent annual chance wave crest elevations. The results of this effort are known as Advisory Base Flood Elevations (ABFEs, sometimes referred to as Advisory Flood Elevations [AFEs]), which are shown on a series of 228 maps for Hancock, Harrison, and Jackson Counties, Mississippi. These maps are also known as "Katrina Recovery Maps" (see Figure 1).
- The ABFEs are updated estimates of the 1 percent annual chance flood elevations, and are generally 5 to 12 feet higher than the base flood elevations (BFEs) shown on the pre-Katrina FIRMs. ABFEs also extend farther inland than the Special Flood Hazard Areas (SFHAs) shown on the pre-Katrina FIRMs.
- The Katrina Recovery Maps also show the approximate inland extent of storm surge inundation experienced during Hurricane Katrina. Since Katrina exceeded the BFE in most locations (based on the updated flood frequency analysis), the inland extent of Katrina storm surge penetration generally lies inland of the ABFE limit. However, where the Katrina impact was less extreme (very near the eye where the hurricane winds are small, to the left of the eye where the peak winds blow offshore rather than onshore, and far to the right of the eye where the winds weaken), the Katrina surge penetration properly lies seaward of the ABFE limit.
- FEMA and the State of Mississippi will conduct detailed studies during 2005 and 2006 to produce revised FIRMs. The revised FIRMs will result from more detailed storm surge stillwater analyses and more detailed wave analysis methods than those used to produce the Katrina Recovery (ABFE) Maps. As a result, BFEs on the revised FIRMs may differ from the ABFEs. In the interim, the ABFEs should be treated as the best available 1 percent annual chance elevation information.

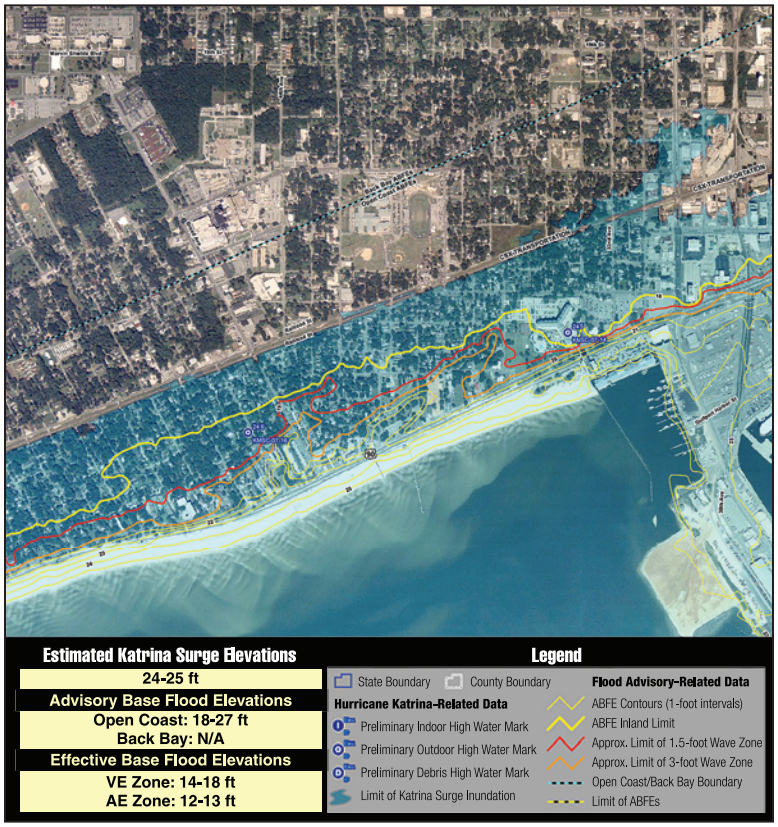


***Figure 1. Sample Hurricane Katrina Surge Inundation and Advisory Base Flood Elevations. The shaded region in blue indicates the approximate inland extent of storm surge inundation experienced during Katrina; the ABFE contours are shown in yellow and the predicted inland limit of damaging wave effects during the advisory base flood is shown by the red line. Blue points indicate surveyed Katrina high water mark elevations.***

- Although the information contained on the Katrina Recovery Maps is advisory in nature, communities are encouraged to use ABFEs to regulate reconstruction and new construction until the revised FIRMs are produced by FEMA.
- Until such time as the revised FIRMs are published by FEMA and adopted by communities, those communities may use the pre-Katrina FIRMs, or Katrina Recovery Maps, or other flood elevations to regulate reconstruction and new construction (as long as the other flood elevations are not lower than those shown on the pre-Katrina FIRMs).

## Advisory Base Flood Elevations (ABFEs)

The pre-Katrina FIRMs for communities in Hancock, Harrison, and Jackson Counties were published between the early 1980s and 2002; the current maps underestimate today's risk. Following Hurricane Katrina, FEMA updated the stillwater flood frequency analysis for coastal Mississippi to include tide and storm surge stillwater data for the past 25 plus years. These revised stillwater elevations formed the basis for FEMA's calculation of ABFEs.

The revised 1 percent annual chance storm surge stillwater levels were published by FEMA on October 3, 2005, for Hancock, Harrison, and Jackson Counties in Mississippi (see Table 1). The procedure which makes use of these elevations to compute ABFEs is illustrated in Figure 2 and the example below.

**Table 1. Updated 1 Percent Annual Chance (100-Year) Stillwater Elevations for Use in Calculating ABFEs**

| County (Mississippi) | Updated 1 Percent Annual Chance Stillwater Elevations (SWEL), (ft NAVD*) | |
|---|---|---|
| | Gulf of Mexico Shoreline | Back Bay Shorelines |
| Jackson | 14 | 12 |
| Harrison | 18 | 16 |
| Hancock | 20 | 18 |

*North American Vertical Datum of 1988
Storm Surge Stillwater Elevation (SWEL)

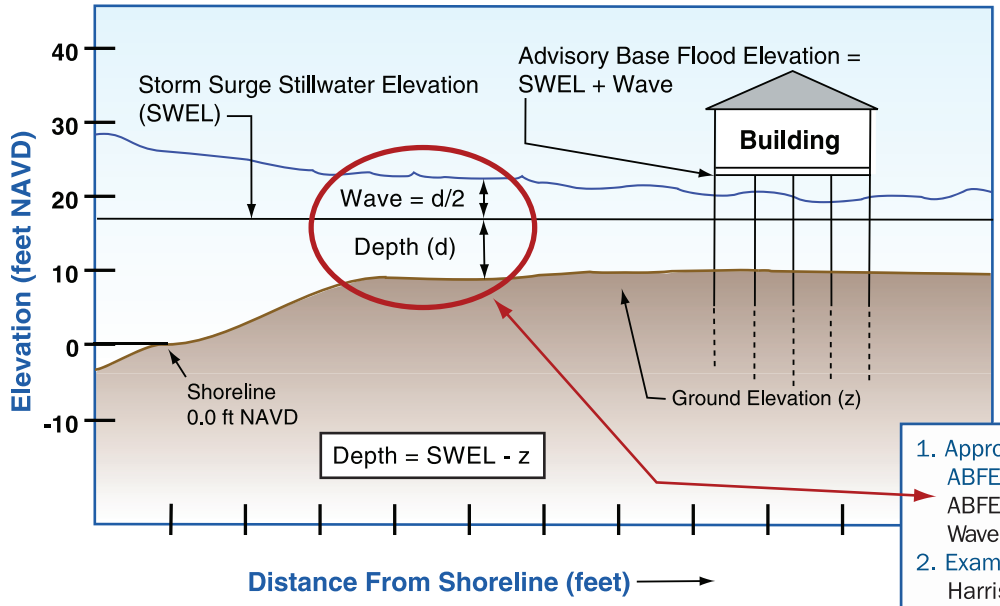


1. Approximate Method for Calculating ABFE:
   ABFE = SWEL + Wave
   Wave = ½ depth = d/2
2. Example:
   Harrison Co Gulf SWEL = 18 ft
   Ground Elevation (z) = 10 ft
   Depth = SWEL – z = 18 ft – 10 ft = 8 ft
   Wave = ½ (8) = 4 ft

   ABFE = 18 + 4 = 22 feet NAVD

***Figure 2. How to determine the Advisory Base Flood Elevation based on the site's ground elevation, applicable advisory elevation, and estimated wave height.***

Communities and designers may note that the ABFE procedure is a simplified version of FEMA's Wave Height Analysis for Flood Insurance Studies (WHAFIS) program used to map base flood conditions on coastal FIRMs. The ABFE procedure does not account for wave attenuation due to dense stands of vegetation, buildings, or other obstructions. Nor does it account for wave growth and regeneration across flooded upland areas. Thus, BFEs on the revised FIRMs (anticipated in 2007) may differ from the ABFEs computed during this interim period. The ABFEs can be considered the best available data at this time.

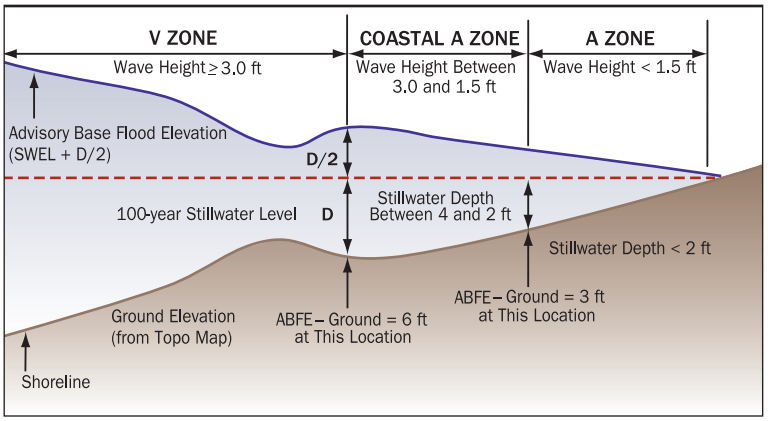


***Figure 3. Cross-section showing 1 percent annual chance stillwater elevation, stillwater depth and ABFE, and inland limits of V Zone and Coastal A Zone.***

Figure 3 illustrates the relationships between the stillwater flood elevation, ground elevations, associated 1 percent annual chance stillwater flood depths, ABFEs, and associated flood hazard zones.

### Advisory Base Flood Elevations

The Katrina Recovery Maps (see Figure 1) include the following information:

- Pre-Katrina aerial photographs (as a base map)
- Approximate Katrina surge inundation limit (shaded area)
- ABFE contours (ft NAVD)
- Predicted inland limit of damaging wave effects during the advisory base flood (red line)
- Surveyed Katrina high water mark elevations

More background information on ABFEs and their use can be found in Flood Recovery Guidance-Frequently Asked Questions, dated October 3, 2005, and available at:

www.fema.gov/hazards/floods/recoverydata/katrina_ms_resources.shtm

Communities are encouraged to use the Katrina Recovery Maps. They may continue to enforce their adopted FIRMs and associated design and construction requirements. However, by using the ABFEs any reconstruction or new construction (following Katrina and before issuance of revised FIRMs, expected in 2007) will be at much less risk from future flood damage, and will be eligible for reduced flood insurance premiums (new and reconstructed buildings can be rated using BFEs and flood hazard zones on the effective FIRM, until revised FIRMs are adopted by the community).

## Flood Protection Levels for Post-Katrina Reconstruction and New Construction

Until revised FIRMs are published by FEMA and adopted by communities, those communities are free to regulate reconstruction and new construction using several methods:

- Continue to use pre-Katrina FIRMs (understanding that this would knowingly put people and buildings at risk)
- Modify the use of pre-Katrina FIRMs (e.g., add freeboard to the pre-Katrina BFEs)
- Use the Katrina Recovery (Advisory Base Flood Elevation) Maps
- Modify the Katrina Recovery Maps (e.g., conduct a more detailed wave analysis and add to the 1 percent annual chance stillwater elevation, replacing ABFE contours shown on the maps)
- Develop other maps and methods (as long as the resulting BFEs and flood hazard zones are no less restrictive than the pre-Katrina FIRMs)

Each of these methods has advantages and disadvantages, both for implementation and for the long-term protection of buildings constructed after Hurricane Katrina. These are summarized in Table 2.

**Table 2. Comparison of Various Methods for Providing Post-Katrina Flood Protection to Reconstructed Buildings and New Construction**

| Advantages | Disadvantages |
|---|---|
| **Continue Use of Pre-Katrina FIRMs** | |
| No change from pre-Katrina flood hazard maps | • Underestimates inland extent of flooding during base flood<br>• Underestimates flood depths<br>• Underestimates inland extent of the V Zone and damaging wave effects<br>• Does not protect buildings outside the pre-Katrina SFHA against damage during the base flood<br>• Limits eligibility for post-Katrina hazard mitigation grants and other reconstruction funds |
| **Add Freeboard to Pre-Katrina FIRMs (where freeboard is less than that indicated by updated 1 percent annual chance flood analysis)** | |
| • Provides increased flood protection for buildings within the pre-Katrina V Zone<br>• Provides increased flood protection for buildings near the inland limit of the pre-Katrina A Zone<br>• Buildings elevated to the new (freeboard) elevation will be eligible for flood insurance premium discounts (they can be rated using the pre-Katrina FIRM) | • Underestimates inland extent of flooding during base flood<br>• Does not protect buildings outside the pre-Katrina SFHA against damage during the base flood<br>• Does not expand the V Zone inland, and does not protect buildings in the seaward portion of the pre-Katrina A Zone against wave damage<br>• Does not fully protect any buildings subject to the updated 1 percent annual chance flood<br>• Limits eligibility for post-Katrina hazard mitigation grants and other reconstruction funds |
| **Use Katrina Recovery (ABFE) Maps** | |
| • Uses the latest 1 percent annual chance flood elevation and mapping guidance to characterize the extent, depth and severity of updated base flood hazards<br>• ABFEs near the coast may be comparable to revised BFEs expected in 2007<br>• Provides flood protection consistent with the latest estimate of the updated base flood<br>• Reduces potential floor elevation and foundation differences between buildings reconstructed/constructed to ABFEs and those constructed after adoption of revised BFEs.<br>• Buildings elevated to the ABFE will be eligible for flood insurance premium discounts (they can be rated using the pre-Katrina FIRM) | • Large differences between pre-Katrina building floor elevations and post-Katrina building floor elevations<br>• ABFEs near the inland limit of flooding and in areas sheltered from wave effects may overstate wave hazards and wave crest elevations |
| **Modify the Katrina Recovery (ABFE) Maps (via improved wave height analysis)** | |
| • Same as ABFE entries above<br>• Reduce wave height overestimates introduced by the ABFE approach | Large differences between pre-Katrina building floor elevations and post-Katrina building floor elevations |
| **Other Methods** | |
| Vary with method selected | Vary with method selected |

## Using the Advisory Base Flood Elevations

Communities can make use of the Advisory Base Flood Elevations by those methods summarized in Table 2. In addition, communities can take several steps that will help to protect reconstruction and new construction:

- Define the revised inland extent of the SFHA using ground contours equal to the stillwater elevations contained in Table 1.
- Define the revised inland extent of the coastal high hazard area (V Zone) based on a 4-foot stillwater depth (the depth required to support a 3-foot wave), using whatever new 1 percent stillwater elevation the community adopts. If the community adopts the stillwater elevations in Table 1, ground elevations corresponding to the new inland V Zone limit are shown in Table 3. In most cases, the first encounter with that ground elevation (starting at the shoreline and moving inland) will be the inland V Zone limit.
- Define the inland extent of a Coastal A Zone (see Hurricane Katrina Recovery Advisory, Design and Construction in Coastal A Zones ) based on a 2-foot stillwater depth (the depth required to support a 1.5-foot wave), using whatever new 1 percent stillwater elevation the community adopts. If the community adopts the stillwater elevations in Table 1, ground elevations corresponding to the inland limit of the Coastal A Zone are shown in Table 3. In most cases, the first encounter with that ground elevation (starting at the shoreline and moving inland) will be the inland limit of the Coastal A Zone.
- Implement a local ABFE revision process, to allow for special circumstances where property owners can supply better topographic data or information which will result in a more accurate delineation of flood hazards. Note: such a revision process should not allow reduction of the stillwater elevations in Table 1.
- If a community has adopted the International Building Code or the International Residential Code, define the "Design Flood Elevation" as the ABFE. Define the "Flood Hazard Area" as the inland extent of flooding using the ABFE procedure.

**Table 3. Ground Elevations Corresponding to Inland Limits of V Zones and Coastal A Zones** (based on 1 percent annual chance stillwater elevations published by FEMA, October 3, 2005)

| County, Flood Source | 1 Percent Annual Chance Stillwater Elevation (ft NAVD) | Ground Elevation Corresponding to Inland Limit of V Zone (ft NAVD) | Ground Elevation Corresponding to Inland Limit of Coastal A Zone (ft NAVD*) |
|---|---|---|---|
| Jackson, Gulf of Mexico | 14 | 10 | 12 |
| Jackson, Back Bay | 12 | 8 | 10 |
| Harrison, Gulf of Mexico | 18 | 14 | 16 |
| Harrison, Back Bay | 16 | 12 | 4 |
| Hancock, Gulf of Mexico | 20 | 16 | 18 |
| Hancock, Back Bay | 18 | 14 | 16 |

* North American Vertical Datum of 1988

## Design and Construction Practices Using ABFEs

FEMA recommends that all reconstruction and new construction within the revised flood hazard area employ a "best practices" approach, incorporating those methods known to eliminate or reduce flood damage. This will mean:

- Elevating buildings higher than before Katrina, on stronger foundations, with continuous load paths and stronger connections, and with wind- and water-resistant walls, windows, doors, and roofs.
- Elevating buildings with the bottom of the lowest horizontal structural member supporting the lowest floor above the ABFE (or whatever regulatory flood elevation a community adopts). *In A Zones, do not elevate the building only such that the lowest floor walking surface is at the ABFE (or whatever regulatory flood elevation a community adopts).*
- Using flood-damage resistant building materials above the lowest floor elevation of the building (remember, floods more severe than the base flood can, and do, occur).
- Designing and constructing buildings using methods and materials described in:
    - The latest model building codes and standards
    - FEMA 55, *Coastal Construction Manual* (revised 2000)
    - FEMA 499, *Home Builder's Guide to Coastal Construction,* Technical Fact Sheet Series (2005) (http://www.fema.gov/fima/mat/fema499.shtm)

# Initial Restoration for Flooded Buildings

FEMA

**HURRICANE KATRINA RECOVERY ADVISORY**

**NOTE:** This advisory is specifically intended for buildings subject to the effects of long-term flooding and widespread mold growth following Hurricane Katrina. For additional information on more common water leakage and mold situations, refer to the FEMA website (http://www.fema.gov) and related links to the Environmental Protection Agency (EPA) and the Centers for Disease Control and Prevention (CDC) sites listed at the end of this advisory.

During the initial visit to a flood-damaged building, the situation often appears overwhelming (Figure 1). However, despite the shock that often accompanies an individual's first look at the damage, there are a number of straightforward principles can be applied to assist with the flood restoration effort. In addition to following the steps outlined below, individuals should review the Hurricane Katrina Recovery Advisory, *The ABC's of Returning to Flooded Buildings*.

***Figure 1. Typical flood damage to furniture and interior walls (Hurricane Katrina).***

## 1. Air Out

- To promote drying, open all doors and windows whenever you are present and leave as many open when you are not present as security concerns allow. Some styles of windows (double-hung) and patio doors may be able to be left partially open and secured from external opening by inserting a nail in the window frame or using a wooden dowel or stick. Upper floor windows can usually be left open all the time and will also assist in drying the whole house. Try to take advantage of cross-ventilation by opening windows on multiple levels and opposite sides of the building.
- Open interior doors, especially closets and interior rooms, to allow air movement to reach all areas of the building. Take doors off their hinges if necessary to promote air flow.
- Open kitchen cabinet and bathroom vanity doors; remove drawers and stack them to dry.
- Open the attic access, if available, to increase ventilation. Consider the benefits (improved drying) and risks (falling dust, insulation, or other debris) of adding an attic access where none exists.
- When electricity is available, use fans to push moist air outside. However, avoid use of fans if the house is contaminated with sewage as the air movement may spread bacterial contamination.

## 2. Move Out

- Remove salvageable contents that were not impacted by the water. If the upper floors are dry, it may be possible to move such items to those areas. When moving items from impacted areas of the building to other locations, consider using protective mats or non-slip drop cloths (e.g., fabric painter cloths) to avoid contamination of unimpacted surfaces.
- Remove saturated porous materials such as mattresses or upholstery, especially those with visible fungal growth. These items should be moved out of the building as soon as possible. Cover contaminated items with plastic drop cloths prior to moving to prevent spread of contaminants. Appropriate personal protective equipment should be utilized to avoid injury from possible exposure to mold and bacteria.

## 3. Tear Out

- Prior to beginning tear out, install plastic barriers between affected and unaffected areas of the premises (typically between the first and second floors). This will reduce the potential for secondary damage occurring in the unaffected areas.
- Remove wet carpet and padding. Tack strips should also be removed completely when the carpet is taken out to minimize injury during subsequent activities. Since carpet tack strips have protruding nails, wear leather gloves to protect hands from puncture wounds while removing and handling tack strips. Removing wooden baseboards prior to carpet tear out may allow for their later reinstallation.
- Remove any curled vinyl tiles or linoleum over concrete floors, and remove all vinyl tiles or linoleum over wooden sub-floors to allow the wood to dry. Respiratory protection should be worn as many older (pre-1970s) flooring products, such as 9-inch square tiles and adhesives, often contain asbestos.
- Although punching holes in walls for drainage is commonly recommended, this practice does not drain water nor does it cause the wall to dry faster. If holes are not punched in the walls, the drywall (gypsum board) may be able to be easily repaired and restored.
- If drywall or plaster has been saturated by contaminated floodwater, it should be removed. Respiratory protection should be worn when removing drywall as some older drywall joint compound contains asbestos. If the water level was less than 2½ feet, the wall material should be removed to a height of 4 feet to facilitate reinstallation of full sheets of drywall. If the water level was greater than 2½ feet, the wall material should be removed to a height of 8 feet or the ceiling junction, whichever is higher. Electrical outlet and wall switch plates and door and window moldings must be removed prior to the tear out of the wall material.
- Fibrous wall insulation (fiberglass, mineral wool, cellulose, wood fiberboard, etc.) saturated by floodwater should be removed completely. Foam plastic insulation may be left in place and allowed to dry.
- Flooded electrical receptacles should be removed completely after the appropriate circuit breakers or fuses are deactivated.
- Wall paneling should be removed if it is swollen or if saturated drywall is behind the paneling.

## 4. Clean Out

- Following any necessary tear out, clean up any remaining debris and muck. Squeegees, shovels, and brooms are effective for such cleaning. Personal protective equipment should be utilized. Detailed cleaning and sanitizing of the remaining materials should be conducted. A shop vacuum with dry filters in place and with a solution of clean water and disinfectant in the tank (2-inch depth) to minimize the spread of dust can be used.
- **Mold removal**. Treatment with commercial mold removers does eliminate visible evidence of mold growth on exposed surfaces and is recommended for restoring flood-damaged homes. Tests have found very little or no evidence of mold growth in the non-exposed (hidden) portions of the walls. Treating the non-exposed portions of the walls for mold control does not appear warranted in most cases. Spraying vertical surfaces using a compression (pump-up) garden sprayer with a commercial mildew remover is recommended.
- **Understand the limitations of bleach**. While this material is convenient and appropriate as a sanitizer for hard, non-porous items after they have been cleaned, it has distinct drawbacks when cleaning flood-impacted buildings. Application of bleach water can cause corrosion of electrical components and other metal parts of mechanical systems, and can compromise the effectiveness of termite treatments in the soil surrounding the building. Its effectiveness at killing bacteria and mold is significantly reduced when it comes in contact with residual dirt. Moldy surfaces should be cleaned first and then disinfected. Residual mold spores should then be removed, since killing them does not reduce their toxicity.
- Remove mud and gross contamination from floors by shoveling into suitable containers. Reduce soil and

*Figure 2. Using a pressure washer to clean contaminated surfaces.*

contaminant levels on surfaces by flushing off with clear water. The fastest and most efficient method to clean and decontaminate materials and surfaces is by using a residential-type pressure washer to apply a cleaner-disinfectant solution to the affected areas (Figure 2). Brushes improve decontamination of floors and some walls by scrubbing solution into affected surfaces. Avoid scrubbing drywall and plaster walls at this time because they have become softened by the flooding and moisture and may have their surface damaged by scrubbing. Following the first cleaning, floors and walls should be rinsed with water and the cleaning process redone a second time. Squeegees can be used to control or direct spent solution, and wet vacuums can be used to collect spent solution.

**Warning:** Failure to allow for adequate drying prior to reconstruction can trap moisture in the building, which can cause structural damage and potential health problems in the future.

## 5. Dry Out

- Once the clean process is completed, the building and any remaining contents need to dry. Drying is a naturally occurring process. Over time, all wetted building materials will dry. Drying of structural materials will take an extended period of time to dry to pre-flood conditions. Exterior rooms with excellent ventilation can take 2 to 4 weeks to dry, depending on the temperature and humidity outside. Interior rooms, or those with minimal ventilation, can take 4 to 6 weeks or more to dry and are candidates for the use of mechanical drying equipment. The use of fans, dehumidifiers, air conditioners, and/or auxiliary electric heaters will speed drying. Allowing materials to dry naturally will take considerably longer.
- **Wood framing**. The moisture content of wood framing must be checked professionally or with a commercially available moisture meter before refinishing or recovering so that excessive moisture does not become trapped in the materials and cause future problems (Figures 3a and 3b). Dryness of wood framing materials can be determined quantitatively using the table on the right above. Wetted materials are presumed dry when their moisture content readings are less than or equal to 15 percent when taken with an intrusive/penetrating moisture meter (Figure 3a). If an intrusive/penetrating moisture meter is not available, a non-intrusive/penetrating moisture meter (Figure 3b) may be used; however, keep in mind that the material moisture results measured from non-intrusive meters may be less accurate than intrusive meters.
- **Walls, floors, and other building materials**. The moisture content of drywall (gypsum board), plywood floors, and other building materials must also be checked professionally or with a commercially available moisture meter before refinishing or recovering so that excessive moisture does not become trapped in the materials and cause future problems (Figures 3a and 3b). Unlike wood framing, the dryness of other building materials must be confirmed qualitatively by comparing readings between like materials in affected areas of the building (at or below flood level) and unaffected areas of the building (a room or upper floor above the flood

**Summary of Moisture Reading Results for Wood Framing Materials**

| Moisture Reading | Results |
|---|---|
| > 20% | Wet - no good |
| 15 - 20% | Partially dry - caution |
| < 15% | Dry - OK |

*Figure 3a. An intrusive/penetrating moisture meter–recommended for final moisture readings.*

*Figure 3b. A non-intrusive/non-penetrating moisture meter–recommended for initial and interim moisture readings.*

level, or inside a nearby building that was not flooded). Wetted materials are presumed dry when their moisture content readings are within 5 percent of those of like materials in unaffected areas of the building when taken with an intrusive/penetrating moisture meter (Figure 3a). If an intrusive/penetrating moisture meter is not available, a non-intrusive/penetrating moisture meter (Figure 3b) may be used; however, keep in mind that the material moisture results measured from non-intrusive meters may be less accurate than intrusive meters.

- Kitchen cabinets, bathroom vanities, and other "built-in" furnishings that were subjected to flood water should be removed from their location to permit drying of the material behind them. Once these "hidden" areas are dried, the furnishings can be reinstalled if they are salvageable.
- When saturated wood, drywall, and/or other structural materials vulnerable to fungal growth are naturally air dried over an extended period (weeks), the application of a disinfectant prior to drying can prevent mold growth. Materials should be closely observed and disinfectant reapplied at the first sight of mold.

## General Notes for Drying Foundation Floors

- **Crawlspaces**. Access to crawlspaces is necessary for decontamination purposes. For crawlspaces that do not have an existing access opening, the simplest method to access the crawlspace is by strategically removing sections of overlying flooring to permit access. When the flooring is not salvageable, removal of the flooring provides the necessary access openings. Once access is obtained, gross (solid) contamination should be removed from the ground underneath the building for health and sanitation purposes. Next, any remaining water should be removed. If there is an existing vapor retarder on the ground, it can be left in place to collect spent water and cleaning solutions. Following remediation and any necessary final cleaning, the vapor retarder can be left in place to facilitate drying. If there is exposed ground within the crawlspace after cleaning, it should be covered with a plastic vapor retarder to minimize potential mold growth and future moisture migration into the house. Plastic vapor retarders can be made watertight by overlapping and sealing them together using either glue or heavy-duty adhesive. Suitable adhesives can be obtained from hardware stores or home improvement centers. After the vapor retarder is placed, the underlying support structure of salvageable wooden floor joists, wood sub-floors, and foundation walls should be cleaned and sanitized. Following cleaning, application of a wood preservative will provide protection against fungi and wood destroying insects.
- **Grade slabs**. Concrete grade slabs provide a dense barrier between the ground and the interior of the home. Remove mud and gross contamination from slabs by shoveling into suitable containers. Reduce soil and contaminant levels on surfaces by flushing off with clear water. The fastest and most efficient method to clean and decontaminate contaminated grade slabs and adjacent building materials and surfaces is by using a residential type of pressure washer to apply a cleaner-disinfectant solution to affected areas. Brushes improve decontamination of floors and base of walls by scrubbing solution into affected surfaces. Following the first cleaning, floors and base of walls should be rinsed with water and the cleaning process redone a second time. Squeegees can be used to control or direct spent solution, and wet vacuums can be used to collect spent solutions. Following cleaning, the slab should be visually examined for signs of heaving or cracking due to hydrostatic pressure. When in doubt, contact the local building inspector, structural engineer or other appropriate professional.

## Additional Resources

- Repairing Your Flooded Home (ARC #4477/FEMA 23)
  http://www.redcross.org/services/disaster/0,1082,0_570_,00.html
- Cleaning Flood-Damaged Homes (LSU AgCenter)
  http://www.louisianafloods.org/en/family_home/hazards_and_threats/recovery_assistance/cleaning_up/structural_damage/Cleaning+FloodDamaged+Homes.htm
- Mold Fact Sheet (LSU AgCenter)
  http://www.louisianafloods.org/en/family_home/home/health_safety/indoor_air_quality_mold/Mold+Fact+Sheet.htm

For additional information on more common water leakage and mold situations:

- Environmental Protection Agency (EPA), http://www.epa.gov/mold
- Centers for Disease Control and Prevention (CDC), http://www.cdc.gov/mold

# Design and Construction in Coastal A Zones

FEMA

## HURRICANE KATRINA RECOVERY ADVISORY

**Purpose:** To recommend design and construction practices in coastal areas where wave and flood conditions during the base flood will be less severe than in V Zones, but still cause significant damage to typical light-frame construction

## Key Issues

- Recent post-storm investigations have shown that typical A Zone construction techniques (e.g., wood-frame, light gauge steel or masonry walls on shallow footings or slabs, etc.) are subject to damage when exposed to less than 3-foot breaking waves, which is the current threshold for V Zone conditions.
- Coastal A zone buildings that employ typical residential and light commercial walls to elevate and support habitable space above the flood level will be susceptible to flood damage (see Figure 1). Laboratory tests and recent field investigations confirm that breaking wave heights as small as 1.5 feet will cause failure of these types of walls (see Figures 2 and 3).
- Other flood hazards associated with coastal waves (e.g., floating debris, high velocity flow, erosion and scour) also damage A Zone type construction in coastal areas (see Figures 4 and 5).
- NFIP flood hazard mapping is generally divided into two categories, V Zone and A Zone. In coastal areas, the A Zone category could be subdivided into "Coastal A Zone" and "A Zone." Base flood conditions in the Coastal A Zone will be similar to, but less severe than, those in the V Zone; base flood conditions in the A Zone will be similar to those in riverine or lake floodplains.
- The Coastal A Zone is not shown on the FIRM at present; therefore, communities, designers, and owners will have to determine whether a site lies within a Coastal A Zone.
- **V Zone design and construction standards are recommended in Coastal A Zones subject to erosion, high velocity flow, and/or wave heights greater than 1.5 feet.**

*Figure 1. Failure of wood-frame walls used to support a coastal building, which was subjected to shallow flooding, small waves, and floating debris (Hurricane Opal).*

*Figure 2. Masonry walls destroyed by 3 feet of stillwater flooding and small waves (Hurricane Dennis).*

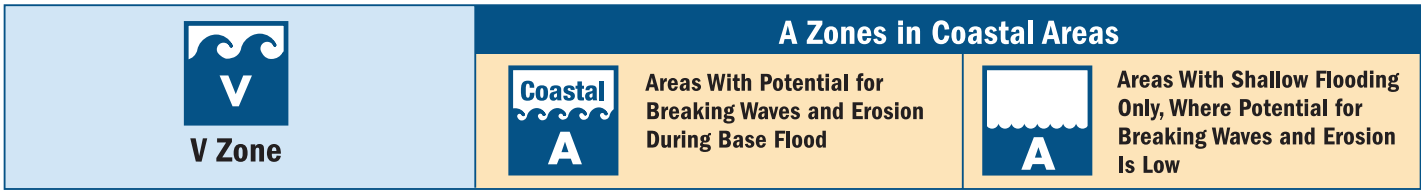

*Figure 3. Failure of wood-frame wall, brick veneer, and windows as a result of 4 feet of stillwater flooding and small waves (Hurricane Katrina).*

*Figure 4. Failure of A Zone type foundation in coastal area, not subject to V Zone conditions (Hurricane Fran).*

*Figure 5. Damage to light frame walls due to floating debris and small waves. The damaged home was in the third row back from a bay shoreline (Hurricane Ivan).*

## Coastal A Zone, Defined

**Coastal A Zone:** area landward of a V Zone, or landward of an open coast without mapped V Zones. In a Coastal A Zone, the principal source of flooding will be astronomical tides, storm surges, seiches or tsunamis, not riverine flooding. During base flood conditions, the potential for breaking wave heights between 1.5 feet and 3.0 feet will exist (see Figure 6).

Coastal A Zone design and construction practices described herein are not mandated by the NFIP, but are recommended for communities that wish to adopt higher floodplain management standards. Community Rating System (CRS) credits are available for doing so. Note that some Coastal A Zone practices may be required by the International Building Code, through its reference to ASCE 24-98.

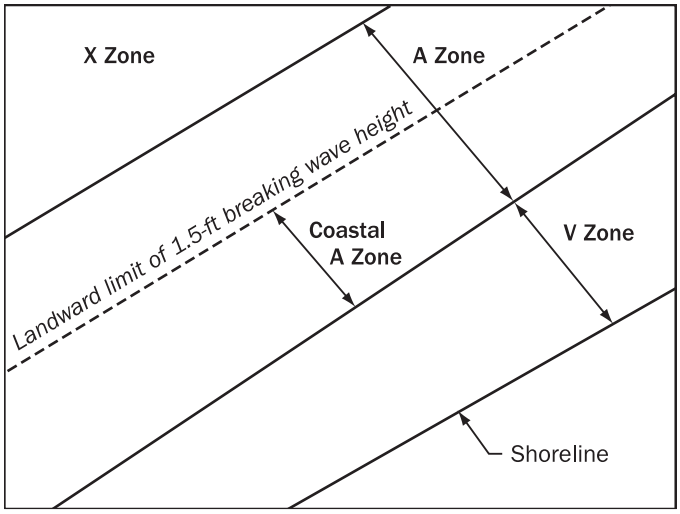


*Figure 6. Plan view showing Coastal A Zone landward of V Zone (source: ASCE 24-05).*

## Coastal A Zone Construction Guidance

Because of the presence of damaging waves, V Zone design, construction, and certification practices are recommended for Coastal A Zones.

Coastal A Zone construction should include:

- Use of open foundations (pile or pier) designed to resist all base flood conditions (waves, high velocity flow, erosion and scour, floodborne debris). Where high velocity flow, scour, and erosion will not be experienced under base flood conditions, a traditional stem wall foundation may be acceptable – see Table 1.
- Elevation of the bottom of the lowest horizontal structural member supporting the lowest floor above the base flood wave crest elevation (see Figure 7).Since waves and debris will be impacting on the floor joists and other foundation elements during the base flood, *do not follow current NFIP minimum requirements that allow the lowest floor's walking surface to be set at the wave crest elevation in Zone A.*
- Use of flood-resistant materials above the level of the walking surface of the lowest floor (in the event that future flooding exceeds the lowest floor level).
- Specification of connections between the foundation and the elevated building that are capable of withstanding simultaneous wind and flood forces. Post-Katrina investigations found many foundation-to-building connections to be deficient (see Figure 8).
- Use of space below the lowest horizontal structural member for parking, access, or storage only. Adding sufficient freeboard to allow parking beneath the building will not only reduce future flood damages, but will also lower flood insurance premiums.
- Use of screen, lattice, or breakaway walls if space below the elevated floor is enclosed. Note: until flood regulations are changed, breakaway walls in Coastal A Zones must be equipped with flood openings.

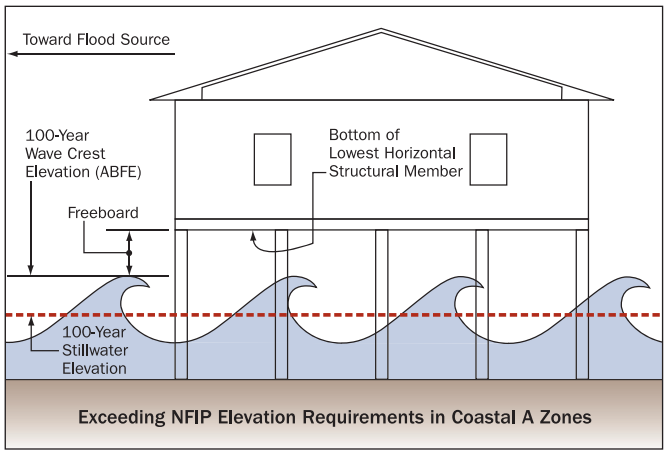


***Figure 7. Recommended post-Katrina building standards in Coastal A Zones.***

***Figure 8. Post-Katrina investigations showed that many buildings were attached to foundation piers with light gauge metal straps. These straps failed in many instances. A stronger (preferably bolted) connection is recommended when attaching Coastal A Zone buildings to their foundations.***

Additional guidance for design and construction in Coastal A Zones can be found in FEMA 499, *Home Builder's Guide to Coastal Construction* (http://www.fema.gov/fima/mat/fema499.shtm). The publication is a series of 31 fact sheets that provide recommended design and construction practices for foundations, connections, building envelope, etc. Fact Sheet 2 summarizes recommended practices for Coastal A Zones, and references other fact sheets that provide more details.

**Table 1. Foundation Recommendations for Coastal A Zones** (Users should read across from a foundation type to see under what soil and base flood conditions that foundation is acceptable. A foundation must be capable of resisting all base flood conditions likely to exist at the site, or it should not be used. For example, a properly constructed pier on a shallow footing will generally withstand 1.5- to 3.0-foot wave heights, but should not be used where soils are erodible, and where high velocity flow is possible, or where large floodborne debris may be present.)

| Foundation Type | Base Flood Condition Present | | |
|---|---|---|---|
| | Wave Heights Between 1.5 and 3.0 Feet* | Velocity Flow, Erodible Soils | Large Debris |
| Fill | no | no | no |
| Slab on grade | no | no | no |
| Crawlspace, shallow footing | no | no | no |
| Foundation walls, shallow footing | no | no | no |
| Stemwall, shallow footing | yes | no | yes |
| Stemwall, deep footing** | yes | yes | yes |
| Pier, shallow footing | yes | no | no |
| Pier, deep footing** | yes | yes | no |
| Post, shallow embedment | no | no | no |
| Pile/Column, deep embedment** | yes | yes | yes |

*Wave heights greater than 3.0 feet mapped as V Zone: fill, slab, crawlspace, wall foundations not permitted.

**Deep means sufficiently deep to withstand erosion and scour, including that induced by the presence of the foundation itself.

## Identifying Coastal A Zones

Coastal A zones are not shown on present day Flood Insurance Rate Maps (FIRMs) or mentioned in a community's Flood Insurance Study (FIS) Report. Those maps and studies show zones VE, AE, and X (or older designations V1-30, A1-30, B, and C). Therefore, until Coastal A Zone designations or wave height contours are incorporated into Flood Insurance Studies, the community official, designer, or owner will have to determine whether or not a site will be subject to Coastal A Zone conditions during the base flood.

In order for a Coastal A Zone to be designated, two conditions are required:

1) a water depth sufficient to support waves between 1.5 and 3.0 feet high, and

2) the actual presence of wave heights between 1.5 and 3.0 feet.

Condition 1 requires stillwater depths (vertical distance between the 100-year stillwater elevation and the ground elevation) of 2 to 4 feet at the site.

Condition 2 requires wave heights at the shoreline greater than 1.5 to 3.0 feet (under the 100-year flood conditions), sufficient water depth between the shoreline and the site and few, if any obstructions (buildings, dense tree stands, etc.) that may block or dampen the waves, between the shoreline and the site.

Figure 9 illustrates the relationships between the stillwater flood elevation, ground elevations, associated 1 percent annual chance (100-year) stillwater flood depths, ABFEs, and associated flood hazard zones (see Hurricane Katrina Recovery Advisory *Reconstruction Guidance Using Hurricane Katrina Surge Inundation and ABFE Maps*).

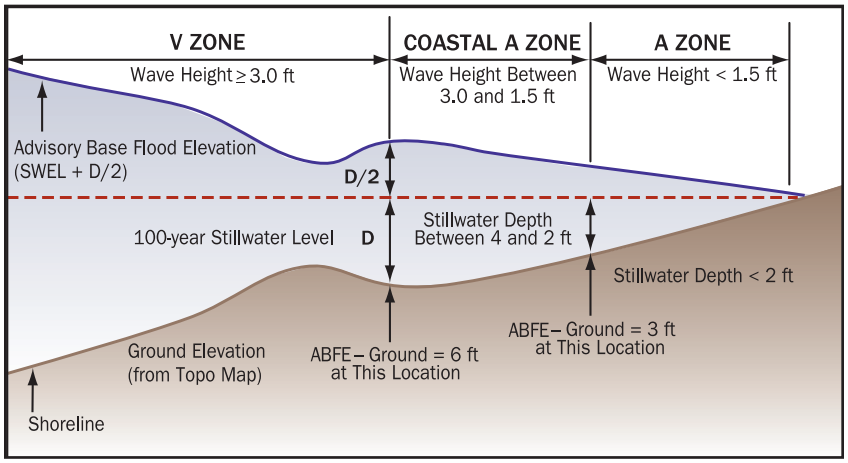


***Figure 9. Cross-section showing 1 percent annual chance stillwater elevation, stillwater depth and ABFE, and inland limits of V Zone and Coastal A Zone.***

Communities, designers, and owners can obtain the information necessary to make a post-Katrina Coastal A Zone determination by observing the site and its surroundings, knowing site ground elevations, and using 1 percent annual chance stillwater elevations from the Advisory Base Flood Elevation (ABFE) guidance (see Table 2). Figure 10 shows how site and surrounding conditions would influence a Coastal A Zone determination.

**Table 2. Updated 1 Percent Annual Chance (100-Year) Stillwater Elevations for Use in Calculating ABFEs (see Figure 9)**

| County | Updated 100-year Stillwater Elevations (SWEL), (ft NGVD*) | |
|---|---|---|
| | Gulf of Mexico Shoreline | Back Bay Shorelines |
| Jackson | 14 | 12 |
| Harrison | 18 | 16 |
| Hancock | 20 | 18 |

*National Geodetic Vertical Datum

***Figure 10. Although the site on the left is mapped Zone AE, proximity to the Gulf of Mexico shoreline and limited obstructions to waves indicate the site could be classified as a Coastal A Zone. The site on the right is over 4,000 feet from the Gulf shoreline and over 1,000 feet from the bayou, mapped as Zone AE, and has a base flood stillwater level sufficient to support >1.5-foot wave heights – but obstructions to waves (e.g., trees and other buildings between the site and the shoreline), and distance from the sources of flooding would indicate the area is not a Coastal A Zone.***

# The ABC's of Returning to Flooded Buildings

FEMA

## HURRICANE KATRINA RECOVERY ADVISORY

Hurricane Katrina produced widespread flooding from both storm surge and levee breaches. The combination of water intrusion and delayed re-entry due to evacuation requirements and power interruption has created a situation that demands careful planning by individuals returning to flood damaged buildings. The following tips are designed to assist impacted individuals when they are able to reach their flooded property. Additional information can be found in the Hurricane Katrina Recovery Advisory, *Initial Restoration for Flooded Buildings*.

## Anticipate what you will need

- Personal protective equipment including safety shoes or boots (rubber boots may be best if you are not sure if the water has been pumped out), work gloves, eye protection, rubber gloves for cleaning or when using sanitizing chemicals, a hard hat, and respiratory protection in case there is mold or bacteria contamination (respirators with HEPA cartridges or dust masks with a rating of N-95 or higher should be used). These can be obtained from hardware stores or home improvement stores. If materials containing asbestos are suspected, it will be necessary to use a respirator with a HEPA cartridge in accordance with Federal requirements.
- Tools for entry and cleaning such as a pry bar, shovel, and a flashlight with extra batteries (Figure 1)
- Camera or video recorder for recording conditions for use in insurance claims
- Hand and face cleaning supplies such as alcohol swabs or hand sanitizer gel
- Cleaning supplies for salvagable materials including potable water, chemical cleaners/sanitizers, sponges, buckets, and wiping rags
- Packing supplies to protect fragile salvaged items during transport
- First aid kit
- Pen and paper, tape, scissors, and small plastic storage bags for writing down serial numbers and saving samples of discarded materials to support insurance claims

***Figure 1. Tools for entry and cleaning***

## Be realistic about your limitations

- Even initial assessment and salvage can be hot, heavy work.
- If at all possible, work with another person while in the house. Unforeseen hazards can exist, so having help nearby is prudent.
- Avoid entry, even with personal protective equipment, if you have serious pre-existing health issues:
  - Asthma/allergies
  - Heart problems
  - Compromised immune system
  - Open cuts or wounds
- Get help moving large items such as furniture and appliances.
- Do not underestimate the impact of psychological shock and physical effort:
  - Identify someone in advance who you can talk to about your situation and feelings
  - See the resource section for some potential contacts

## Check the situation for hazards

- Downed power lines
- Gas leaks
- Evidence of structural damage such as sagging ceilings, large wall or floor cracks, walls out of plumb, etc.
- Unstable materials
    - Furniture and even vehicles can be stacked in hazardous positions (Figure 2)
- Chemical spills
    - Paints, solvents, lawn fertilizers, pesticides
- Vermin such as snakes, rats, fire ants, bee colonies, etc.
- Other hazards
    - Rotting food
    - Dead animals

***Figure 2. Furniture stacked by flood waters creates a safety hazard.***

## Document conditions

- Photos or videos are best
    - Shoot multiple pictures of each room from different corners
    - Make sure the photos will be clear before changing the conditions
    - Use a camera with a time/date stamp for photos if possible
- Make written notes of the dates that you were at the building
- Save samples of high-quality contents such as carpets to support insurance claims

## Extract the salvageable items

- Focus on high value items that were not water impacted and items that have special significance. If an entire item cannot be saved, consider parts that could be saved. For example, if a family heirloom such as an antique chest cannot be saved, consider saving the non-porous handles or hinges for use on a replacement piece.
- Porous items that were not water logged or moldy should be the second priority.
- Non-porous items such as glassware, silverware, and plastic furniture that need to be cleaned should be separated. (Note: Contaminated items should be cleaned on site if possible. Transporting wet/contaminated items presents the risk of cross contamination of the vehicle and location where the item is moved.)
- Be aware of termites. If a termite infestation is found, consult a professional exterminator. When discarding or salvaging wood, paper, and other cellulose, protect your property and keep Formosan subterranean termites from spreading. For additional information, refer to the Louisiana Ag Center. *(http://www.louisianafloods.org/en/family_home/hazards_and_threats/recovery_assistance/insect_pest_management/Keeping+Formosan+Termites+from+Spreading+after+Hurricanes.htm)*

## Facilitate restoration

- Do what you can to salvage the contents on the property.
- See American Red Cross, *Repairing Your Flooded Home*, *http://www.redcross.org/services/disaster/0,1082,0_570_,00.html*

## Get help

- The following resources may be useful in providing technical support during your recovery from a flooding event:
  - American Red Cross (*http://www.redcross.org*)
  - FEMA (*http://www.fema.gov*)
  - Association of Specialists in Cleaning & Restoration (*http://www.ascr.org*)
  - Louisiana State University AgCenter - Cooperative Extension Service (*http://www.LouisianaFloods.org*)
  - National Association of Home Builders (*http://www.nahb.org/category.aspx?sectionID=843*)
  - National Association of the Remodeling Industry (*http://www.nari.org*)
- The following resources may be useful in providing financial and/or psychological support during your recovery from a flooding event:
  - American Red Cross (*http://www.redcross.org*)
  - Salvation Army (*http://www.salvationarmyusa.org/usn/www_usn.nsf*)
  - FEMA (*http://www.fema.gov*)
  - Small Business Administration (*http://www.sba.gov*)
  - State/local health departments - such as the North Carolina Department of Health and Human Services (*http://www.dhhs.state.nc.us/docs/hurricaneoccupant.htm*)

# Attachment of Brick Veneer in High-Wind Regions

FEMA

## HURRICANE KATRINA RECOVERY ADVISORY

**Purpose:** To recommend practices for installing brick veneer that will enhance wind resistance in high-wind areas.

## Key Issues

- Brick veneer is frequently blown off walls of residential and commercial buildings (Figure 1). When brick veneer fails, wind-driven water can enter and damage buildings, and building occupants can be vulnerable to injury from windborne debris (particularly if walls are sheathed with plastic foam insulation or wood fiberboard in lieu of wood panels). Pedestrians in the vicinity of damaged walls can also be vulnerable to injury from falling veneer (Figure 2).
- Common failure modes include tie (anchor) fastener pull-out (Figure 3), failure of masons to embed ties into the mortar (Figure 4), poor bonding between ties and mortar and mortar of poor quality (Figure 5), and tie corrosion (Figure 6).
- Ties are often installed before brick laying begins. When this is done, ties are often improperly placed above or below the mortar joints. When misaligned, the ties must be angled up or down in order for the ties to be embedded into the mortar joints (Figure 7). Misalignment not only reduces embedment depth but also reduces the effectiveness of the ties because wind forces do not act parallel to the ties themselves.
- Corrugated ties typically used in residential veneer construction provide little resistance to compressive loads. Use of compression struts would likely be beneficial, but off-the-shelf devices do not currently exist. Two-piece adjustable ties (Figure 8) provide significantly greater compressive strength than corrugated ties.

***Figure 1. Failed brick veneer. Plastic foam wall sheathing was installed over the wood studs (plywood was temporarily installed after the brick failure).***

***Figure 2. The upper portion of the brick veneer at this apartment building collapsed. Pedestrian and vehicular traffic in the vicinity of the damaged wall were vulnerable to injury and damage if remaining portions of the wall were to collapse during subsequent storms.***

***Figure 3. This tie remained embedded in the mortar joint while the smooth-shank nail pulled from the stud.***

- Many buildings that exhibited damaged veneer were not in compliance with current building codes. Building code requirements for brick veneer have changed over the years. Model codes prior to 1995 permitted brick veneer in any location, with no wind speed restrictions. Wall area per tie in some model codes was greater than the current maximum. The current masonry code referenced in model building codes, Building Code Requirements for Masonry Structures, ACI 530/ASCE 5/TMS 402 (ACI 530) addresses brick veneer in two manners: rational design and prescriptive requirements. Essentially all brick veneer in residential and low-rise construction follows the prescriptive requirements. The first edition of American Concrete Institute's (ACI's) 530 limited the use of prescriptive design to areas with a basic wind speed of 110 mph or less. The 2005 edition of ACI 530 extended the prescriptive requirements to include a basic wind speed of 130 mph, with lower area per tie limits. In locations with a basic wind speed above 130 mph, the rational design approach must be used. Compliance with ACI 530-05 should reduce wind damage.
- The following Brick Industry Association (BIA) Technical Notes provide guidance on brick veneer: Technical Notes 28 – Anchored Brick Veneer, Wood Frame Construction, Technical Notes 28B – Brick Veneer/Steel Stud Walls, and Technical Notes 44B – Wall Ties (available online at www.bia.org). These Technical Notes provide attachment recommendations, but the recommendations are not specific for high-wind regions and are, therefore, inadequate.

***Figure 4. These four ties were never embedded into the mortar joint.***

***Figure 5. This tie was embedded in the mortar, but the bond was poor.***

***Figure 6. There were several ties in this portion of the wall, but they failed due to severe corrosion.***

## Construction Guidance

The brick veneer wall system is complex in its behavior. There are limited test data on which to draw. The following guidance is based on professional judgment, wind loads specified in ASCE 7-02 "Design Loads for Buildings and Other Structures," fastener strengths specified in the American Forest and Paper Association's (AF&PA's) National Design Specification for Wood Construction, and brick veneer standards contained in ACI 530-05. In addition to the general guidance given in BIA Technical Notes 28 and 28B, the following are recommended:

Note: In areas that are also susceptible to high seismic loads, brick veneer should be evaluated by an engineer to ensure it can resist seismic and wind design loads.

**Stud Spacing**: For new construction, space studs 16" on center, so that ties can be anchored at this spacing.

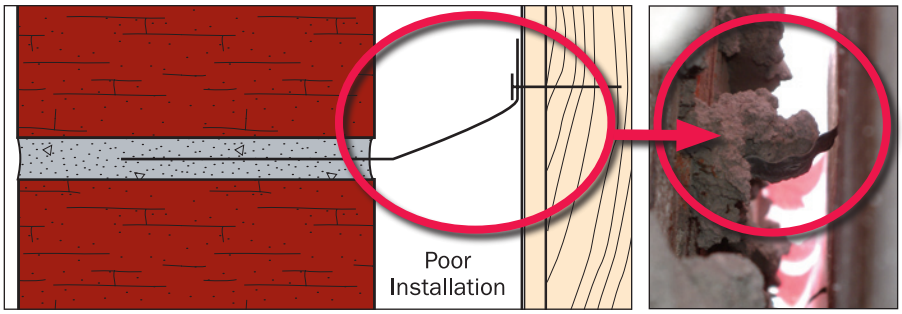


***Figure 7. Misalignment of the tie reduces the embedment and promotes veneer failure.***

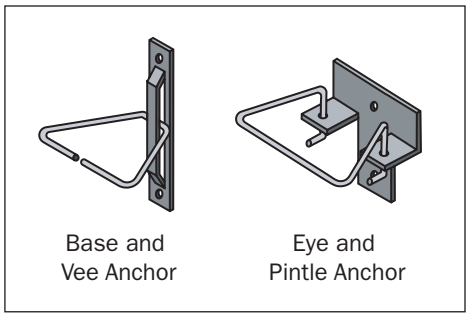


***Figure 8. Examples of two-piece adjustable ties***

**Tie Fasteners**: Ring-shank nails are recommended in lieu of smooth-shank nails. A minimum embedment of 2" is suggested.

**Ties**: For use with wood studs: two-piece adjustable ties are recommended. However, where corrugated steel ties are used, use 22-gauge minimum, 7/8" wide by 6" long, complying with ASTM A 366 with a zinc coating complying with ASTM A 153 Class B2. For ties for use with steel studs, see BIA "Technical Notes 28B – Brick Veneer/Steel Stud Walls." Stainless steel ties should be used in areas within 3,000 feet of the coast.

## Tie Installation

- Install ties as the brick is laid so that the ties are properly aligned with the mortar joints.
- Install brick ties spaced per Table 1. Studs should be installed at 16" spacing. Veneer tie locations for 24" stud spacing are included for repairing damaged veneer on existing buildings with the wider stud spacing.
- Locate ties within 8" of door and window openings and within 12" of the top of veneer sections.
- Bend the ties at a 90-degree angle at the nail head in order to minimize tie flexing when the ties are loaded in tension or compression (Figure 9).
- Embed ties in joints so that mortar completely encapsulates the ties. Embed a minimum of 1.5" into the bed joint, with a minimum mortar cover of 5/8" to the outside face of the wall (Figure 10).

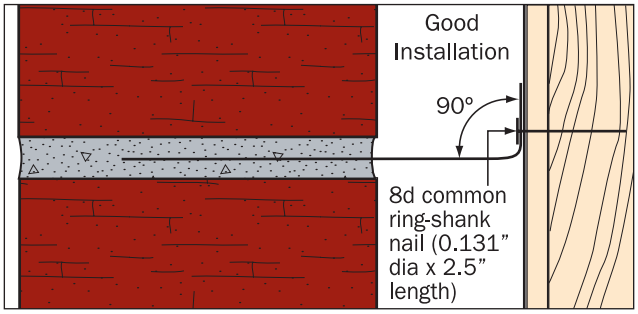


***Figure 9. Bend ties at nail heads***

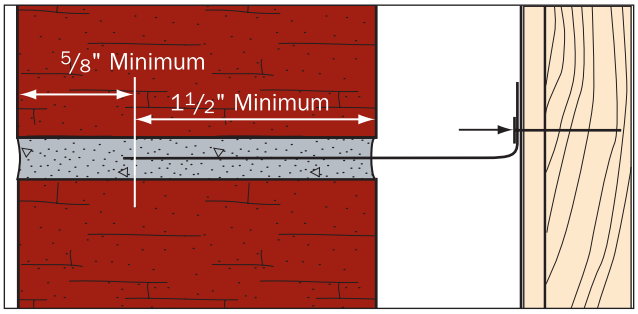


***Figure 10. Tie embedment***

**Table 1. Brick Veneer Tie Spacing**

| Wind Speed (mph) (3-Second Peak Gust) | Wind Pressure (psf) | Maximum Vertical Spacing for Ties | |
|---|---|---|---|
| | | 16" stud spacing | 24" stud spacing |
| 90 | 17.8 | 18.0[a] | 16.0[a] |
| 100 | 22.0 | 18.0[a] | 16.0[a] |
| 110 | 26.6 | 18.0[a] | 14.8 |
| 120 | 31.6 | 18.0[a] | NA[b] |
| 130 | 37.1 | 15.9 | NA[b] |
| 140 | 43.0 | 13.7 | NA[b] |
| 150 | 49.4 | 10.2 | NA[b] |

Notes:

1. The tie spacing is based on wind loads derived from Method 1 of ASCE 7-02, for the corner area of buildings up to 30' high, located in Exposure B with an importance factor (I) of 1.0 and no topographic influence. For other heights, exposure, or importance factor, an engineered design is recommended.
2. Fastener strength is for wall framing with a Specific Gravity G=0.55 with moisture contents less than 19% and the following adjustment factors, Ct=0.8; and CD, CM, Ceg, and Ctn=1.0.
3. Nail embedment depth of 2" for 2.5" long 8d common (0.131" diameter) ring-shank fasteners

[a] Maximum spacing allowed by ACI 530-05

[b] 24" stud spacing exceeds the maximum horizontal tie spacing of ACI 530-05 prescribed for wind speeds over 100 mph

# Attachment of Rooftop Equipment in High-Wind Regions

FEMA

## HURRICANE KATRINA RECOVERY ADVISORY

**Purpose:** To recommend practices for designing and installing rooftop equipment that will enhance wind resistance in high-wind regions.

**Note:** For attachment of lightning protection systems, see Hurricane Katrina Recovery Advisory on Rooftop Attachment of Lightning Protection Systems in High-Wind Regions.

## Key Issues

Rooftop equipment frequently becomes detached from rooftops during hurricanes. Water can enter the building at displaced equipment (see Figure 1); displaced equipment can puncture and tear roof coverings (thus allowing water to leak into the building). Equipment blown from a roof can damage buildings and injure people. Damaged equipment may no longer provide service to the building.

*Figure 1. This gooseneck was attached with only two small screws. A substantial amount of water was able to enter the building during the hurricane.*

## Construction Guidance

**Mechanical Penthouse:** By placing equipment in mechanical penthouses rather than being exposed on the roof, equipment within penthouses is shielded from high-wind loads and windborne debris (see Figure 2). Therefore, use of mechanical penthouses designed and constructed in accordance with a current building code are recommended, particularly for critical and essential facilities.

**Design Loads and Safety Factors:** Loads on rooftop equipment should be determined in accordance with the 2005 edition of ASCE 7.

Note: For guidance on load calculations, see "Calculating Wind Loads and Anchorage Requirements for Rooftop Equipment," ASHRAE Journal, volume 48, number 3, March 2006.

A minimum safety factor of 3 is recommended for critical and essential facilities, and a minimum safety factor of 2 is recommended for other buildings. Loads and resistance should also be calculated for heavy pieces of equipment (see Figure 2).

*Figure 2. This 30' x 10' x 8' 18,000-pound HVAC unit was attached to its curb with 16 straps (one screw per strap). Although the wind speeds were estimated to be only 85 to 95 miles per hour (3-second peak gust), it blew off the building.*

**Simplified Attachment Table:** To anchor fans, small HVAC units, and relief air hoods, the following minimum attachment schedule is recommended (see Table 1) (note: the attachment of the curb to the roof deck also needs to be designed to resist the design loads):

**Table 1. Number of #12 Screws for Base Case Attachment of Rooftop Equipment**

| Case No. | Curb Size and Equipment Type | Equipment Attachment | Fastener Factor for Each Side of Curb or Flange |
|---|---|---|---|
| 1 | 12”x 12” Curb with Gooseneck Relief Air Hood | Hood Screwed to Curb | 1.6 |
| 2 | 12”x 12” Gooseneck Relief Air Hood with Flange | Flange Screwed to 22 Gauge Steel Roof Deck | 2.8 |
| 3 | 12”x 12” Gooseneck Relief Air Hood with Flange | Flange Screwed to 15/32” OSB Roof Deck | 2.9 |
| 4 | 24”x 24” Curb with Gooseneck Relief Air Hood | Hood Screwed to Curb | 4.6 |
| 5 | 24”x 24” Gooseneck Relief Air Hood with Flange | Flange Screwed to 22 Gauge Steel Roof Deck | 8.1 |
| 6 | 24”x 24” Gooseneck Relief Air Hood with Flange | Flange Screwed to 15/32” OSB Roof Deck | 8.2 |
| 7 | 24”x 24” Curb with Exhaust Fan | Fan Screwed to Curb | 2.5 |
| 8 | 36”x 36” Curb with Exhaust Fan | Fan Screwed to Curb | 3.3 |
| 9 | 5’-9”x 3’- 8” Curb with 2’- 8” high HVAC Unit | HVAC Unit Screwed to Curb | 4.5* |
| 10 | 5’-9”x 3’- 8” Curb with 2’- 8” high Relief Air Hood | Hood Screwed to Curb | 35.6* |

**Notes to Table:**

1. The loads are based on the 2005 edition of ASCE 7. The resistance includes equipment weight.

2. The Base Case of the tabulated numbers of #12 screws (or ¼ pan-head screws for flange-attachment) is a 90-mph basic wind speed, 1.15 importance factor, 30’ building height, Exposure C, using a safety factor of 3.

3. For other basic wind speeds, or for an importance factor of 1, multiply the tabulated number of #12 screws by $\left(\frac{V_D^2 \times I}{90^2 \times 1.15}\right)$ to determine the required number of #12 screws or (¼ pan-head screws) required for the desired basic wind speed, $V_D$ (mph) and importance factor, I.

4. For other roof heights up to 200’, multiply the tabulated number of #12 screws by (1.00 + 0.003 [h - 30]) to determine the required number of #12 screws or ¼ pan-head screws for buildings between 30’ and 200’.

**Example A:** 24” x 24” exhaust fan screwed to curb (table row 7), Base Case conditions (see Note 1): 2.5 screws per side; therefore, round up and specify 3 screws per side.

**Example B:** 24” x 24” exhaust fan screwed to curb (table row 7), Base Case conditions, except 120 mph and importance factor of 1: $120^2$ x 1 ÷ $90^2$ x 1.15 = 1.55 x 2.5 screws per side = 3.86 screws per side; therefore, round up and specify 4 screws per side.

**Example C:** 24” x 24” exhaust fan screwed to curb (table row 7), Base Case conditions, except 150’ roof height: 1.00 + 0.003 (150’ - 30’) = 1.00 + 0.36 = 1.36 x 2.5 screws per side = 3.4 screws per side; therefore, round down and specify 3 screws per side.

* This factor only applies to the long sides. At the short sides, use the fastener spacing used at the long sides.

**Fan Cowling Attachment:** Fans are frequently blown off their curbs because they are poorly attached. When fans are well attached, the cowlings frequently blow off (see Figure 3). Unless the fan manufacturer specifically engineered the cowling attachment to resist the design wind load, cable tie-downs (see Figure 4) are recommended to avoid cowling blow-off. For fan cowlings less than 4 feet in diameter, 1/8-inch diameter stainless steel cables are recommended.

***Figure 3. Cowlings blew off two of the three fans shown in this photo. Cowlings can tear roof membranes and break glazing.***

***Figure 4. To overcome blow-off of the fan cowling, this cowling was attached to the curb with cables.***

For larger cowlings, use 3/16-inch diameter cables. When the basic wind speed is 120 mph or less, specify two cables. Where the basic wind speed is greater than 120 mph, specify four cables. To minimize leakage potential at the anchor point, it is recommended that the cables be adequately anchored to the equipment curb (rather than anchored to the roof deck). The attachment of the curb itself also needs to be designed and specified.

**Ductwork:** To avoid wind and windborne debris damage to rooftop ductwork, it is recommended that ductwork not be installed on the roof (see Figure 5). If ductwork is installed on the roof, it is recommended that the gauge of the ducts and their attachment be sufficient to resist the design wind loads.

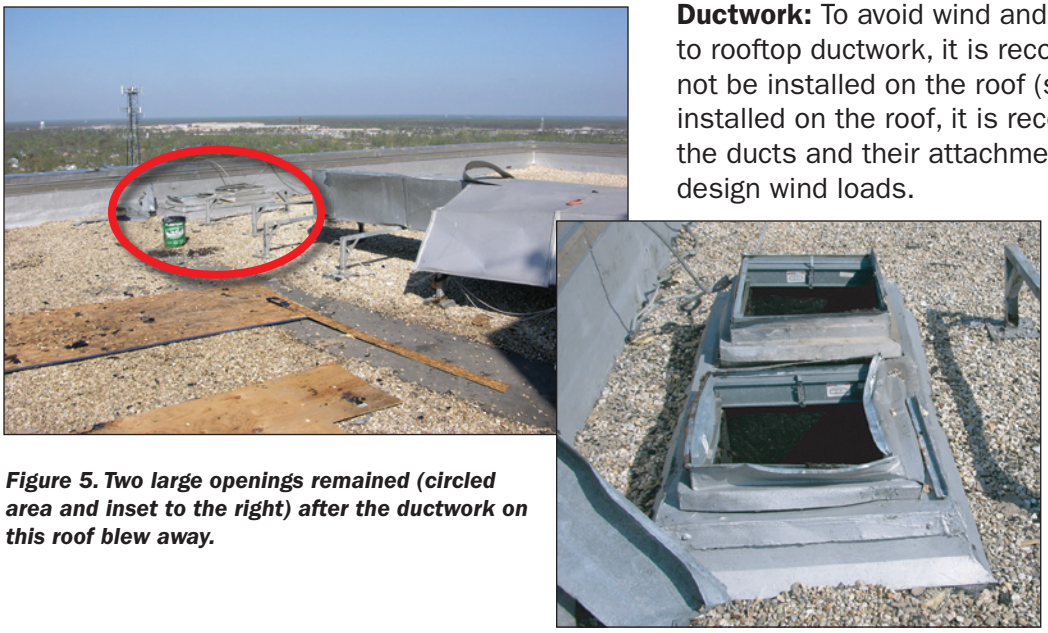

***Figure 5. Two large openings remained (circled area and inset to the right) after the ductwork on this roof blew away.***

**Condensers:** In lieu of placing rooftop-mounted condensers on wood sleepers resting on the roof (see Figure 6), it is recommended that condensers be anchored to equipment stands. (Note: the attachment of the stand to the roof deck also needs to be designed to resist the design loads.) In addition to anchoring the base of the condenser to the stand, two metal straps with two side-by-side #14 screws or bolts at each strap end are recommended (see Figure 7).

***Figure 6. Sleeper-mounted condensers displaced by high winds.***

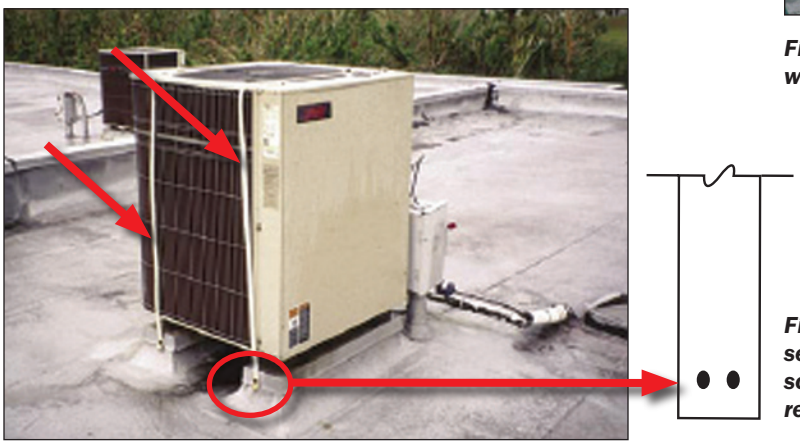

***Figure 7. This condenser had supplemental securement straps (see arrows). Two side-by-side screws with the proper edge and end distances are recommended at the end of the strap.***

**Vibration Isolators:** When equipment is mounted on vibration isolators, an isolator that has sufficient resistance to meet the design uplift loads should be specified and installed, or an alternative means to accommodate uplift resistance should be provided (see Figure 8).

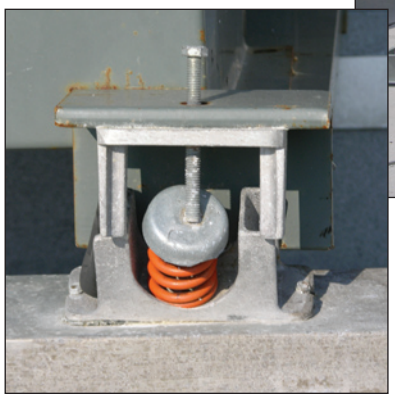

***Figure 8. The equipment on this stand was resting on vibration isolators that provided lateral resistance but no uplift resistance (above). A damaged vibration isolator is shown in the inset (left).***

**Access Panel Attachment:** Access panels frequently blow off. To minimize blow-off of access panels, job-site modification will typically be necessary (for example, the attachment of hasps and locking devices such as a carabiner). The modification details will need to be tailored for the equipment, which may necessitate detail design after the equipment has been delivered to the job site. Modification details should be approved by the equipment manufacturer.

***Figure 9. Several of the equipment screen panels were blown away. Loose panels can break glazing and puncture roof membranes.***

**Equipment Screens:** Equipment screens around rooftop equipment are frequently blown away (see Figure 9). Equipment screens should be designed to resist the wind loads derived from ASCE 7.

**Note:** The extent that screens may reduce or increase wind loads on equipment is unknown. Therefore, the equipment behind screens should be designed to resist the loads previously noted.

**Other resources:** Three publications pertaining to seismic restraint of equipment provide general information on fasteners and edge distances:

- Installing Seismic Restraints for Mechanical Equipment (FEMA 412)
- Installing Seismic Restraints for Electrical Equipment (FEMA 413)
- Installing Seismic Restraints for Duct and Pipe (FEMA 414)

# Rooftop Attachment of Lightning Protection Systems in High-Wind Regions

FEMA

**HURRICANE KATRINA RECOVERY ADVISORY**

**Purpose:** To recommend practices for installing lightning protection systems (LPS) that will enhance wind resistance in high-wind regions.

## Key Issues

- Lightning protection systems frequently become disconnected from rooftops during hurricanes. Displaced LPS components can puncture and tear roof coverings, thus allowing water to leak into buildings (see Figures 1 and 2). Also, when displaced, the LPS is no longer capable of providing lightning protection in the vicinity of the displaced conductors ("cables") and air terminals ("lightning rods").
- Lightning protection standards such as NFPA 780 and UL 96A currently provide inadequate guidance for attachment of LPS to rooftops in high-wind regions.
- Some LPS manufacturers provide guidance for attachment, while other manufacturers refer to the roofing material manufacturer for attachment guidance. Some roofing material manufacturers provide guidance for attachment, while other manufacturers refer to the LPS manufacturer for attachment guidance. In most cases, the attachment guidance provided by LPS and roofing material manufacturers is inadequate for hurricane-prone regions.
- LPS conductors are typically attached to the roof at 3 foot intervals. Because the conductors are flexible, when they are exposed to high winds, the conductors exert dynamic loads on the conductor connectors ("clips"). Guidance for calculating the dynamic loads does not exist. The attachment guidance that follows is therefore based on professional judgment.
- LPS conductor connectors typically have prongs to anchor the conductor. When the connector is well-attached to the roof surface, during high winds the conductor frequently bends back the malleable connector prongs (see Figure 3). Conductor connectors have also debonded from roof surfaces during high winds. Based on observations after Hurricane Katrina and other hurricanes, it is apparent that pronged conductor connectors do not provide reliable attachment.

***Figure 1. This displaced air terminal punctured the membrane in several locations.***

***Figure 2. View of an abraded end of a conductor that became disconnected.***

***Figure 3. During high winds, the conductor deformed the prongs and pulled away from this conductor connector.***

## Construction Guidance

**Parapet attachment:** When the parapet is 12-inch high or greater, it is recommended that the air terminal base plates and conductor connectors be mechanically attached with #12 screws that have 1.25 inch minimum embedment into the inside face of the parapet nailer and properly sealed for watertight protection. In lieu of conductor connectors that have prongs, it is recommended that mechanically attached looped connectors be installed (see Figure 4).

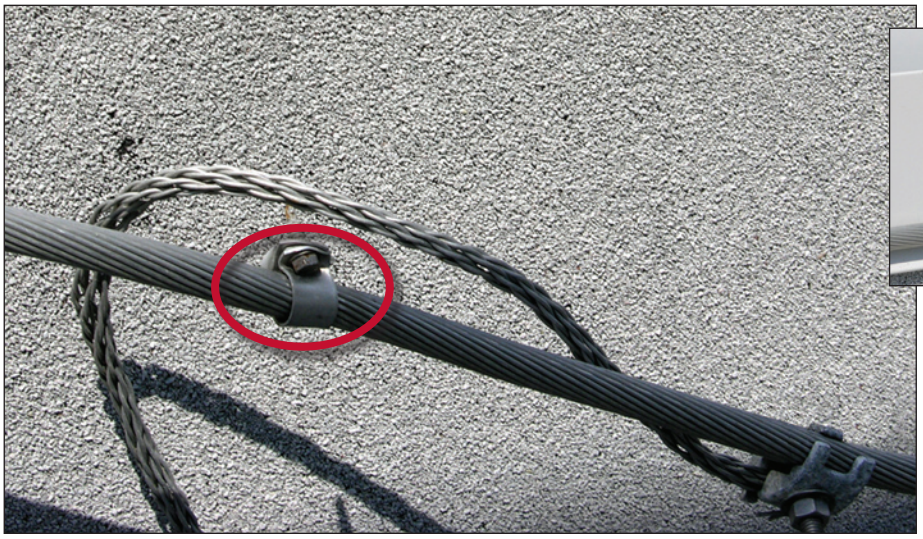

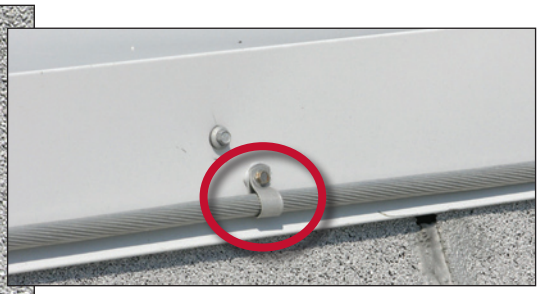

***Figure 4. This conductor was attached to the coping with a looped connector (above). However, a gasket was not installed between the connector and the coping. Also, because the connector screws were too short to engage the wood nailer, the screws pulled out and the conductor was displaced in some areas (figure at left).***

**Attachment to built-up, modified bitumen and single-ply membranes:** For built-up and modified bitumen membranes, attach air terminal base plates with asphalt roof cement. For single-ply membranes, attach air terminal base plates with pourable sealer (type recommended by the membrane manufacturer).

In lieu of attaching conductors with conductor connectors, it is recommended that conductors be attached with strips of membrane installed by the roofing contractor. For built-up and modified bitumen membranes, use strips of modified bitumen cap sheet, approximately 9-inch wide minimum. If strips are torch-applied, avoid overheating the conductors. For single-ply membranes, use self-adhering flashing strips, approximately 9” wide minimum. Start the strips approximately 3 inches from either side of the air terminal base plates. Place strips that are approximately 3’ long, followed by a gap of approximately 3 inches (see Figure 5).

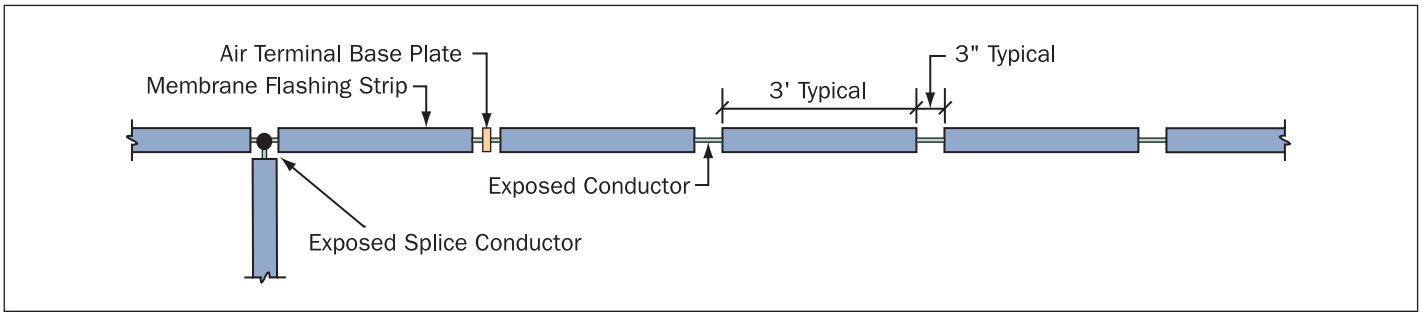


***Figure 5. Plan showing conductor attachment.***

Note: As an option to securing the conductors with stripping plies, conductor connectors that do not rely on prongs (such as the one shown in Figure 6) could be used. However, because the magnitude of the dynamic loads induced by the conductor are unknown and because of the lack of data on the resistance provided by adhesively-attached connectors, attachment with stripping plies is the preferred option because the stripping plies shield the conductor from the wind.

If adhesive-applied conductor connectors are used, it is recommended that they be spaced more closely than the 3 foot spacing required by NFPA 780 and UL 96A. Depending upon wind loads, spacings in the range of 6 to 12 inches on center may be needed in the corner regions of the roof, with spacings in the range of 12 to 18 inches on center at roof perimeters (see ASCE 7 for size of corner regions).

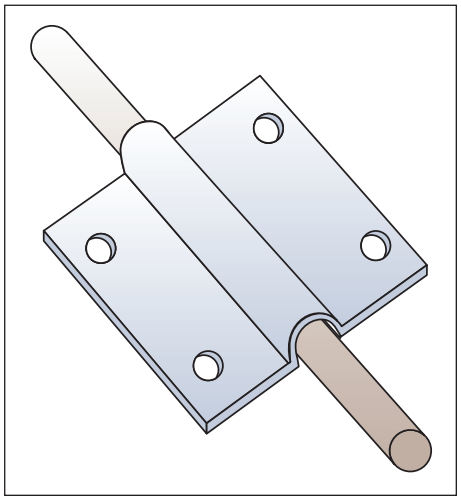

***Figure 6. Adhesively-attached conductor connector that does not use prongs.***

***Figure 7. A failed prong-type splice connector. If conductors become detached from the roof, they are likely to pull from pronged splice connectors.***

***Figure 8. To avoid free ends of connectors being whipped around by wind, bolted splice connectors are recommended because they provide a more reliable connection.***

**Mechanically Attached Single-Ply Membranes:** It is recommended that conductors be placed parallel and within 8 inches of membrane fastener rows. Where the conductor falls between or is perpendicular to membrane fastener rows, install an additional row of membrane fasteners where the conductor will be located and install a membrane cover-strip over the membrane fasteners. Place the conductor over the cover-strip and secure the conductor as recommended above.

Note: By following the above recommendations, additional rows of membrane fasteners beyond those needed to attach the membrane may be needed to accommodate layout of the conductors. The additional membrane fasteners and cover-strip should be coordinated with and installed by the roofing contractor.

**Standing Seam Metal Roofs:** It is recommended that pre-manufactured mechanically attached clips that are commonly used to attach various items to roof panels be used. After anchoring the clips to the panel ribs, the air terminal base plates and conductor connectors are anchored to the panel clips. In lieu of conductor connectors that have prongs, it is recommended that mechanically attached looped connectors be installed.

**Conductor Splice Connectors:** In lieu of pronged splice connectors (see Figure 7), bolted splice connectors are recommended (see Figure 8). It is recommended that strips of flashing membrane (as recommended above) be placed approximately 3 inches from either side of the splice connector to minimize conductor movement and avoid the possibility of the conductors from becoming disconnected. To allow for observation during maintenance inspections, do not cover the connectors.

**Periodic Inspection and Maintenance**: Each spring, it is recommended that the lightning protection system be inspected to verify that connectors are still attached to the roof surface and still engage the conductors. Also check to ensure that splice connectors are still secure. Inspections are also recommended after high wind events.

**Strengthening Attachment of Existing Systems**: On critically important buildings that use adhesively-attached connectors and pronged splice connectors, it is recommended that attachment modifications based on the Construction Guidance be made in order to provide more reliable securement.

# Designing for Flood Levels Above the BFE

FEMA

**HURRICANE KATRINA RECOVERY ADVISORY**

**Purpose:** To recommend design and construction practices that reduce the likelihood of flood damage in the event that flood levels exceed the Base Flood Elevation (BFE).

## Key Issues

- BFEs are established at a flood level, including wave effects, that has a 1-percent chance of being equaled or exceeded in any given year, also known as the 100-year flood or base flood. Floods more severe and less frequent than the 1-percent flood can occur in any year.
- Flood levels during some recent storms have exceeded BFEs depicted on the Flood Insurance Rate Maps (FIRMs), sometimes by several feet (see Figure 1). In many communities, flooding extended inland, well beyond the 100-year floodplain (Special Flood Hazard Area (SFHA)) shown on the FIRM (see Figure 2).
- Flood damage increases rapidly once the elevation of the flood extends above the lowest floor of a building, especially in areas subject to coastal waves. In a V Zone, a coastal flood with a wave crest 3 to 4 feet above the bottom of the floor beam (approximately 1 to 2 feet above the walking surface of the floor) will be sufficient to substantially damage or destroy most light-framed residential and commercial construction (see Figure 4).
- There are design and construction practices that can eliminate or minimize damage to buildings when flood levels exceed the BFE. The most common approach is to add freeboard to the design (i.e., to elevate the building higher than required by the FIRM).

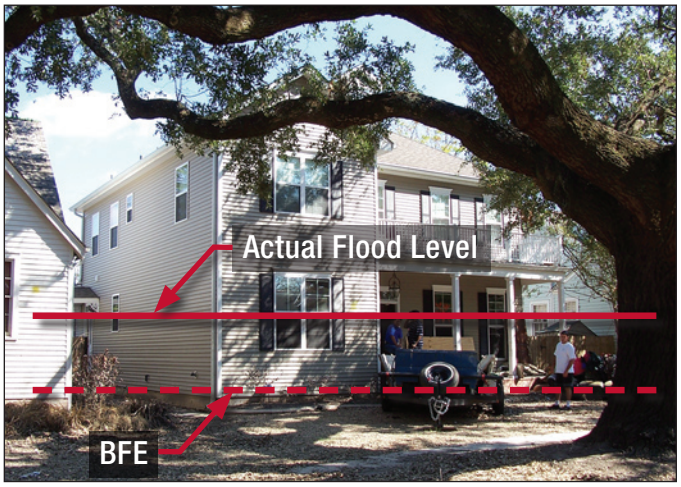


***Figure 1. Levee failures and overtopping during Hurricanes Katrina and Rita (2005) resulted in flood levels (solid red line) several feet above the BFE (dashed red line) over large portions of the greater New Orleans area.***

***Figure 2. Map showing storm surge inundation by Hurricane Katrina at Long Beach (blue shading). Katrina flooding extended beyond the limits of the mapped 100-year floodplain (SFHA) (photo source: NOAA).***

- There are other benefits of designing for flood levels above the BFE: reduced building damage and maintenance: longer building life; reduced flood insurance premiums; reduced displacement and dislocation of building occupants after floods (and need for temporary shelter and assistance); reduced job loss; and increased retention of tax base.

## Flood Insurance Rate Maps and Flood Risk

Hurricanes Ivan (2004) and Katrina (2005) have demonstrated that constructing a building to the minimum National Flood Insurance Program (NFIP) requirements – or constructing a building outside the SFHA shown on the FIRMs – is no guarantee that the building will not be damaged by flooding. This is due to two factors: 1) flooding more severe than the base flood occurs, and 2) some FIRMs, particularly older FIRMs, may no longer depict the true base flood level and SFHA boundary.

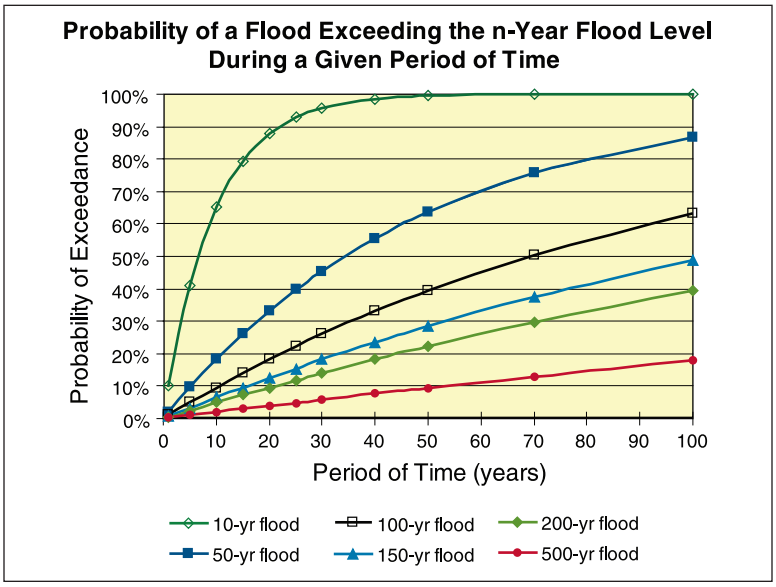


***Figure 3. Probability that a flood will exceed the n-year flood level over a given period of time (Note: this analysis assumes no shoreline erosion, and no increase in sea level or storm frequency/severity over time).***

The black line in Figure 3 shows the probability that the level of the flood will exceed the 100-year flood level during time periods between 1 year and 100 years; there is an 18-percent chance that the 100-year flood level will be exceeded in 20 years, a 39-percent chance it will be exceeded in 50 years, and a 51-percent chance it will be exceeded in 70 years. As the time period increases, the likelihood that the 100-year flood will be exceeded also increases.

Figure 3 also shows the probabilities that floods of other severities will be exceeded. For example, taking a 30-year time period where there is a 26-percent chance that the 100-year flood level will be exceeded, there is an 18-percent chance that the 150-year flood will be exceeded, a 14-percent chance that the 200-year flood will be exceeded, and a 6-percent chance that a flood more severe than the 500-year flood will occur.

FIRMs depict the limits of flooding, flood elevations, and flood hazard zones during the base flood. As seen in Figure 3, buildings elevated only to the BFEs shown on the FIRMs have a significant chance of being flooded over a period of decades. Users should also be aware that the flood limits, flood elevations, and flood hazard zones shown on the FIRM reflect ground elevations, development, and flood conditions at the time of the Flood Insurance Study (FIS).[1]

## Consequences of Flood Levels Exceeding the BFE

Buildings are designed to resist most environmental hazards (e.g., wind, seismic, snow, etc.), but are generally designed to avoid flooding by elevating the building above the anticipated flood elevation. The difference in design approach is a result of the sudden onset of damage when a flood exceeds the lowest floor elevation of a building. Unlike wind – where exposure to a wind speed slightly above the design speed does not generally lead to severe building damage – occurrence of a flood level even a few inches above the lowest floor elevation generally leads to significant flood damage, therefore, the recommendation to add freeboard.

This is especially true in cases where waves accompany coastal flooding. Figure 4 illustrates the expected flood damage (expressed as a percent of a building's pre-damage market value) versus flood depth above the bottom of the lowest

**FIRMs do not account for the following:**

- Shoreline erosion, wetland loss, subsidence, and relative sea level rise
- Upland development or topographic changes
- Degradation or settlement of levees and floodwalls
- Changes in storm climatology (frequency and severity)
- The effects of multiple storm events

Thus, what was once an accurate depiction of the 100-year floodplain and flood elevations may no longer be so.

[1] Sections 7.8.1.3 and 7.9 of FEMA's *Coastal Construction Manual* (FEMA 55, 2000 ed.) provide guidance on evaluating a FIRM to determine whether it still provides an accurate depiction of base flood conditions, or whether it is obsolete.

horizontal structural member supporting the lowest floor (e.g., bottom of the floor beam), for a V Zone building and for a riverine A Zone building.[2]

One striking difference between the two curves is that a V Zone flood depth (wave crest elevation) 3 to 4 feet above the bottom of the floor beam (or approximately 1 to 2 feet above the top of the floor) is sufficient to cause substantial (>50 percent) damage to a building. In contrast, A Zone riverine flooding (without waves and high velocity) can submerge a structure without causing substantial damage. This difference in building damage is a direct result of the energy contained in coastal waves striking buildings – something obvious to those who saw the wave damage that Hurricane Katrina caused in Mississippi and Louisiana (see Figure 5).

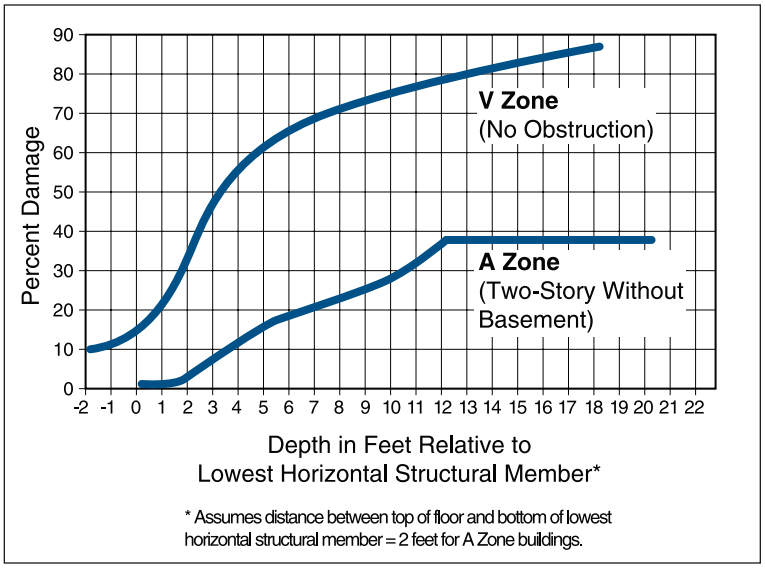


***Figure 4. Flood depth versus building damage curves for V Zones and riverine A Zones (Source: FEMA 55, Coastal Construction Manual).***

***Figure 5. Hurricane Katrina damage to buildings in coastal Mississippi. The upper left, upper right, and lower left photos are of buildings that were close to the Gulf shoreline and subjected to storm surge above the floor and large waves striking the building walls. The lower right photo is of a building almost 1 mile from the Gulf, and subjected to storm surge flooding only.***

[2] Since the normal floor reference for A Zone buildings is the top of the lowest floor, the A Zone curve was shifted for comparison with the V Zone curve.

In cases where buildings are situated behind levees, a levee failure can result in rapid flooding of the area. Buildings near a levee breach may be exposed to high velocity flows, and damages to those buildings will likely be characterized by the V Zone damage curve in Figure 4. Damages to buildings farther away from the breach will be a result of inundation by floodwaters, and will likely resemble the A Zone curve in Figure 4.

## General Recommendations

The goal of this Advisory is to provide methods to minimize damage to buildings in the event that coastal flood levels rise above the BFE. Achieving this goal will require adherence to one or more of the following general recommendations:

- **In all areas where flooding is a concern**, inside and outside the SFHA, **elevate the lowest floor so that the bottom of the lowest horizontal structural member is at or above the Design Flood Elevation (DFE).** Do not place the top of the lowest floor at the DFE, since this guarantees flood damage to wood floor systems, wood floors, floor coverings, and lower walls during the design flood, and may lead to mold/contamination damage (see Figure 6).
- **In flood Zones V and A,** use a DFE that results in **freeboard** (elevate the lowest floor above the BFE) (see Figure 7).
- In flood Zones V and A, **calculate design loads and conditions** (hydrostatic loads, hydrodynamic loads, wave loads, floating debris loads, and erosion and scour) under the assumption that the flood level will exceed the BFE.
- In an **A Zone subject to waves and erosion** (i.e., a Coastal A Zone), use a pile or column foundation (see Figure 7).
- Outside the SFHA (in **flood Zones B, C, and X**), **adopt flood-resistant design and construction practices** if historical evidence or a review of the available flood data shows the building could be damaged by a flood more severe than the base flood (see Figure 8).
- **Design and construct buildings using the latest model building code**, **ASCE 7-05** *Minimum Design Loads for Buildings and Other Structures* and **ASCE 24-05** *Standard for Flood Resistant Design and Construction*.
- **Follow the recommendations in FEMA 499**, *Home Builder's Guide to Coastal Construction Technical Fact Sheets* Series (available at http://www.fema.gov/rebuild/mat/mat_fema499.shtm).
- **Use the pre-engineered foundations shown in FEMA 550**, *Recommended Residential Construction for the Gulf Coast: Building on Strong and Safe Foundations*).

***Figure 6. Other concerns when flood levels rise above the lowest floor are mold and biological/chemical contamination. These may render an otherwise repairable building unrepairable, or will at least make the cleanup, restoration, and repairs much more expensive and time-consuming.***

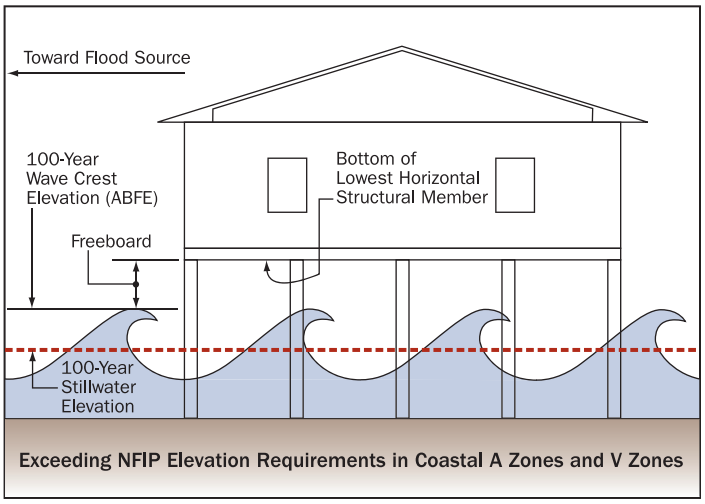


***Figure 7. Recommended construction in Coastal A Zones and V Zones.***

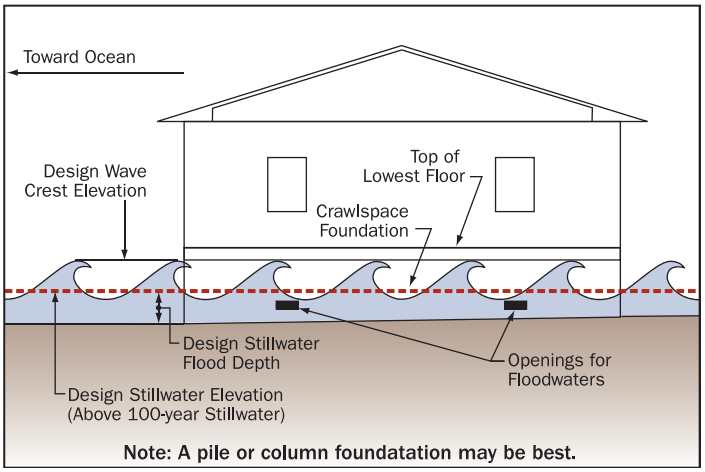


***Figure 8. Recommended construction in Zones B, C, and X.***

- Use **strong connections between the foundation and the elevated building** to prevent the building from floating or washing off the foundation, in the event that flood levels do rise above the lowest floor.
- Use **flood damage resistant building materials and methods** above the lowest floor. For example, consider using drainable, dryable interior wall assemblies (see Figure 9). This allows interior walls to be opened up and dried after a flood above the lowest floor, minimizing damage to the structure. For cavity and mass wall assemblies, the methods and materials in Figures 10 and 11 are recommended.

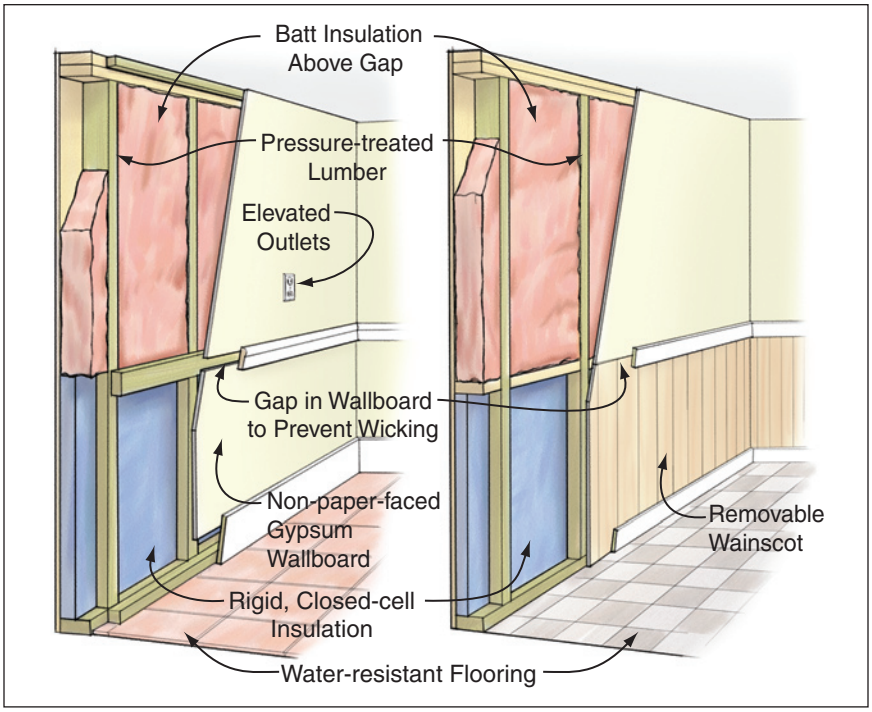


***Figure 9. Recommended wet floodproofing techniques for interior wall construction. The following flood damage resistant materials and methods will prevent wicking and limit flood damage: 1) construct walls with horizontal gaps in wallboard; 2) use non-paper-faced gypsum wallboard below gap, painted with latex paint; 3) use rigid, closed-cell insulation in lower portion of walls; 4) use water-resistant flooring with waterproof adhesive; and 5) use pressure treated wood framing (Source: LSU AgCenter and Coastal Contractor Magazine).***

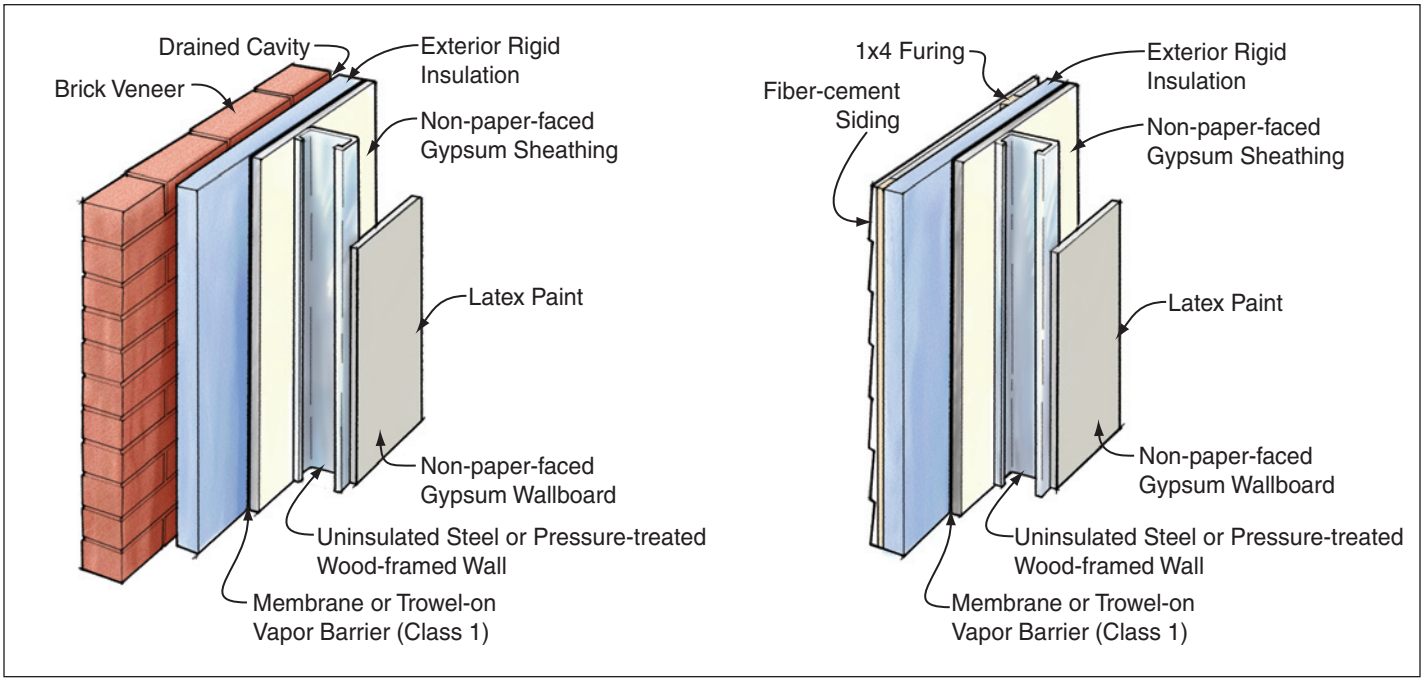


***Figure 10. Recommended flood-resistant exterior cavity wall construction. The following materials and methods will limit flood damage to exterior cavity walls: 1) use brick veneer or fiber-cement siding, with non-paper-faced gypsum sheathing (vinyl siding is also flood-resistant but is less resistant to wind damage); 2) provide cavity for drainage; 3) use rigid, closed-cell insulation; 4) use steel or pressure treated wood studs and framing; and 5) use non-paper-faced gypsum wallboard painted with latex paint (Source: Coastal Contractor Magazine and Building Science Corporation).***

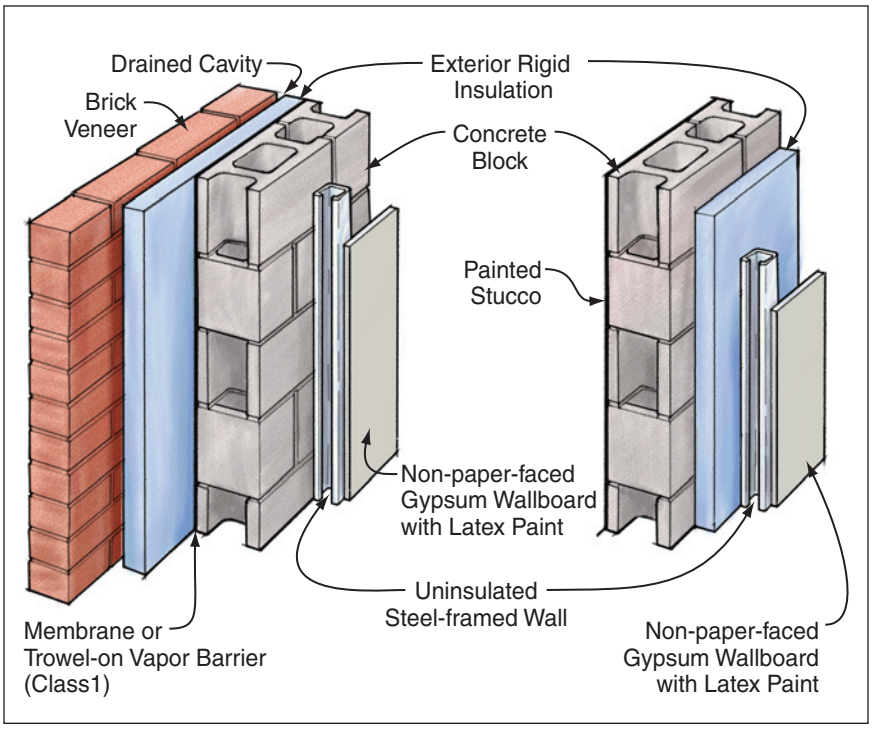


***Figure 11. Recommended flood-resistant exterior mass wall construction. The following materials and methods will limit flood damage to exterior mass walls: 1) use concrete masonry with stucco or brick veneer (provide drainage cavity if brick veneer is used); 2) use rigid, closed-cell insulation; 3) use steel framing; and 4) use non-paper-faced gypsum wallboard painted with latex paint (Source: Coastal Contractor Magazine and Building Science Corporation).***

- **New and replacement manufactured homes should be installed in accordance with the provisions of the 2005 edition of NEPA 225**, *Model Manufactured Home Installation Standard* (http://www.nfpa.org/aboutthecodes/AboutTheCodes.asp?DocNum=225&cookie%5Ftest=1). The standard provides flood, wind, and seismic resistant installation procedures. It also calls for elevating A Zone manufactured homes with the bottom of the main chassis frame beam at or above the BFE, not with the top of the floor at the BFE.

## How High Above the BFE Should a Building be Elevated?

Ultimately, the building elevation will depend on several factors, all of which must be considered before a final determination is made:

- **The accuracy of the BFE shown on the FIRM:** If the BFE is suspect, it is probably best to elevate several feet above the BFE; if the BFE is deemed accurate, it may only be necessary to elevate a couple of feet above the BFE.
- **Availability of Advisory Base Flood Elevations (ABFEs):** ABFEs have been produced for coastal areas following Hurricanes Ivan, Katrina, and Rita. These elevations are intended to be interim recommendations until new FISs can be completed. Some communities have adopted ABFEs, but not all (see the Hurricane Katrina Recovery Advisory posted at http://www.fema.gov/pdf/rebuild/mat/reconst_guidance.pdf).
- **Future conditions:** Since the FIRM reflects conditions at the time of the FIS, some owners or jurisdictions may wish to consider future conditions (such as sea level rise, wetland loss, shoreline erosion, increased storm frequency/intensity, and levee settlement/failure) when they decide how high to elevate.
- **State or local requirements:** The state or local jurisdiction may require a minimum freeboard through its floodplain management regulations.
- **Building code requirements:** The International Building Code (IBC) requires buildings be designed and constructed in accordance with ASCE 24 (*Standard for Flood Resistant Design and Construction*). ASCE 24 requires between 0 and 2 feet of freeboard, depending on the building importance and the edition of ASCE 24 referenced.[3]
- **Critical and essential facilities:** Given the importance of these facilities, some of which must remain operational during a hurricane, they should be elevated higher than most commercial and residential buildings.

[3] The 1998 edition of ASCE 24 is referenced by the 2003 edition of the IBC, and requires between 0 and 1 feet of freeboard. The 2005 edition of ASCE 24 is referenced by the 2006 edition of the IBC, and requires between 0 and 2 feet of freeboard.

- **Building owner tolerance for damage, displacement, and downtime:** Some building owners may wish to avoid building damage and disruption, and may choose to elevate far above the BFE (see Figures 12 and 13).

***Figure 12. Ocean Springs, Mississippi, home elevated approximately 14 feet above the BFE. Katrina flooding was 4 feet below the elevated floor (photo taken after the storm surge had dropped several feet. Courtesy of Ocean Springs, Mississippi, fire chief).***

***Figure 13. Pass Christian, Mississippi, home elevated on reinforced concrete columns in Zone A, with the bottom of the floor beam elevated approximately 9 feet above the BFE. Although Katrina flooding was approximately 4 feet above the top of the lowest elevated floor, the home sustained no structural damage. All other buildings in the vicinity were destroyed.***

The *Hurricane Katrina Summary Report on Building Performance* (FEMA 548) recommends that critical and essential facilities be elevated to the 500-year flood elevation or based on the requirements of ASCE 24-05, whichever is higher. This recommendation may also be appropriate for residential and commercial structures, as well.

The 500-year elevation can be approximated as 1.5 times the 500-year stillwater depth (500-year stillwater elevation minus the ground elevation) added to the ground elevation. This procedure is similar to the procedure used to calculate ABFEs, but with a different stillwater level.

> If the 500-year stillwater elevation (feet North American Vertical Datum of 1988 [NAVD] or feet National Geodetic Vertical Datum of 1929 [NGVD]) is not available, a rule of thumb can be used to approximate it as 1.25 times the 100-year stillwater elevation (feet NAVD or feet NGVD).

## Coastal A Zones

The Coastal A Zone is the area where wave heights between 1.5 and 3.0 feet are expected during the base flood. It is recommended that buildings in this area, with a few exceptions, be designed and constructed similar to V Zone buildings. See the Hurricane Katrina Recovery Advisory at http://www.fema.gov/pdf/rebuild/mat/coastal_a_zones.pdf for details.

## Other Considerations

As previously stated, in addition to reduced building damage, there are other reasons to design for flood levels above the BFE:

- Reduced building maintenance and longer building life
- Reduced flood insurance premiums
- Reduced displacement and dislocation of building occupants after floods (and need for temporary shelter and assistance)
- Reduced job loss
- Increased retention of tax base

Until flooded, many homeowners and communities don't think about these benefits. However, one of the most persuasive (to homeowners) arguments for elevating homes above the BFE is the reduction in annual flood insurance premiums. In most cases, flood premiums can be cut in half by elevating a home 2 feet above the BFE, saving several hundred dollars per year in A Zones, and $2,000 or more per year in V Zones. In V Zones, savings continue to increase with added freeboard.

### Flood Insurance Premium Reductions Can Be Significant

| **Example 1:** V Zone building, supported on piles or piers, no below-BFE enclosure or obstruction. $250,000 building coverage, $100,000 contents coverage. | | **Example 2:** A Zone building, slab or crawlspace foundation (no basement). $200,000 building coverage, $75,000 contents coverage. | |
|---|---|---|---|
| **Floor Elevation above BFE** | **Reduction in Annual Flood Premium*** | **Floor Elevation above BFE** | **Reduction in Annual Flood Premium*** |
| 1 foot | 25% | 1 foot | 39% |
| 2 feet | 50% | 2 feet | 48% |
| 3 feet | 62% | 3 feet | 48% |
| 4 feet | 67% | 4 feet | 48% |

* Compared to flood premium with lowest floor at BFE

## References


ASCE. 2005. *Minimum Design Loads for Buildings and Other Structures*. ASCE 7-05.

ASCE. 2005. *Standard for Flood Resistant Design and Construction*. ASCE 24-05.

Building Science Corporation. 2006. (relevant articles and publications are available at http://www.buildingscience.com).

Coastal Contractor. July 2006. *Low Country Rx: Wet Floodproofing. Drainable, dryable assemblies made with water-tolerant materials help speed recovery from deeper than-expected floods*, by Ted Cushman. (available at http://www.coastalcontractor.net/cgi-bin/issue.pl?issue=9).

FEMA. 2000. *Coastal Construction Manual*. FEMA-55 (ordering information at http://www.fema.gov/pdf/plan/prevent/nhp/nhp_fema55.pdf).

FEMA. 2005. *Home Builder's Guide to Coastal Construction Fact Sheets* Series. FEMA 499 (available at http://www.fema.gov/rebuild/mat/mat_fema499.shtm).

FEMA. 2006. *Hurricane Katrina Summary Report*. FEMA-548 (available at http://www.fema.gov/pdf/rebuild/mat/fema548/548_SumRprt0329fnl.pdf).

FEMA. 2006. *Recommended Residential Construction for the Gulf Coast, Building on Strong and Safe Foundations*. FEMA-550.

LSU AgCenter. 1999. *Wet Floodproofing. Reducing Damage from Floods*. Publication 2771. (available at http://www.louisianafloods.org/NR/rdonlyres/2AEAF3E7-F068-40E6-A4CD-C4B6901F4307/26120/pub2771Wet6.pdf).

NFPA. 2005. *Model Manufactured Home Installation Standard*. NFPA 225. (available at http://www.nfpa.org/aboutthecodes/AboutTheCodes.asp?DocNum=225&cookie%5Ftest=1).