Repair of Earthquake-Damaged Masonry Fireplace Chimneys

FEMA

SOUTH NAPA EARTHQUAKE RECOVERY ADVISORY *FEMA DR-4193-RA1*

Purpose and Intended Audience

The August 24, 2014 South Napa Earthquake has again served as a reminder that masonry chimneys in wood-frame dwellings are extremely vulnerable to earthquake shaking. FEMA assessment teams observed over 100 brick masonry chimneys damaged in the South Napa Earthquake (Figures 1 and 2). Older, unreinforced masonry chimneys with degraded mortar are most vulnerable, but even masonry chimneys constructed according to modern standards are susceptible to significant damage. Collapses of previously damaged and reconstructed chimneys were also observed.

Figure 1: Chimney damaged in the South Napa Earthquake. Photo Credit: Exponent.

This Recovery Advisory recommends best practices for reconstruction of earthquake-damaged masonry chimneys in one- and two-family dwellings to minimize risk of damage in future earthquakes. Owners of dwellings that might have a historic designation, and owners of multi-family dwellings, should consult with the building department regarding applicable requirements.

Information in this advisory is intended to be used by homeowners to compare and contrast options for reconstruction, and by contractors to understand details and applicable building code requirements associated with implementation of these options. ***Note that building permits are always required when performing the work described in this advisory.***

Key Issues:

1. Damaged chimneys reconstructed to match pre-earthquake conditions will remain vulnerable to damage in future earthquakes.
2. Repair of older, unreinforced masonry chimneys to meet modern seismic performance standards is generally considered to be infeasible, and such chimneys may remain vulnerable to collapse in future earthquakes.
3. Best practices for reducing future potential for damage involve partial or complete removal of the masonry and reconstruction with metal flues or fireplace inserts and light-frame construction.

Figure 2: Chimney damaged in the South Napa Earthquake. Photo Credit: Janiele Maffei, CEA

This Recovery Advisory Addresses:

- Capping of the chimney at the roof level (Alternative A)
- Reconstruction of the chimney from the top of the firebox up, either maintaining the use of the existing masonry fireplace (Alternative B), or installing a fireplace insert (Alternative C), or
- Full reconstruction of the firebox and chimney (Alternative D).

Best Practices for Minimizing Future Risk

Good – Capping of Chimney at Roof Level (Alternative A)

For a single story dwelling, if all damage occurred at or above the roof level, the chimney can be permanently removed down to the roof level. This is only possible when use of the fireplace will be discontinued. This is the least costly of the alternatives, but also provides a lesser level of hazard mitigation.

Exterior appearance: The firebox and chimney will remain unchanged up to the roof level. The upper portion of the chimney will be removed.

Interior appearance: Fireplace and mantel will remain, but the fireplace can no longer be used and will need to be closed off.

Environmental: Fireplace will no longer burn combustible materials.

Better – Reconstruction from Top of Firebox, Maintaining Existing Fireplace (Alternative B)

Allows continued use of an undamaged masonry firebox in combination with a new metal flue and light-weight chimney enclosure.

Exterior appearance: The firebox at the bottom of the chimney will remain exposed brick. The reconstructed portion of the chimney is often finished with siding or stucco, but can also be finished with adhered brick veneer to preserve the original appearance.

Interior appearance: Remains unchanged.

Environmental: Fireplace can remain fuel-burning (note that the owner could also choose to convert to a more environmentally friendly gas-burning fireplace).

Better – Reconstruction from Top of Firebox, Using Fireplace Insert (Alternative C)

Allows continued use of an undamaged masonry firebox in combination with a new chimney. In addition, a factory-built fireplace insert is installed inside of the fireplace.

Exterior appearance: The firebox at the bottom of the chimney will remain exposed brick. The reconstructed portion of the chimney is often finished with siding or stucco, but can also be finished with adhered brick veneer to preserve the original appearance.

Interior appearance: Fireplace and mantel will remain, but a fireplace insert will be visible inside of the original masonry fireplace.

Environmental: Fireplace can remain fuel-burning. Fireplace inserts can be more energy efficient at producing heat in the home, can reduce emissions through more complete combustion of solid fuels, or can be converted to more environmentally friendly gas-burning.

Best – Full Reconstruction of Firebox and Chimney (Alternative D)

Involves replacement of the entire firebox and chimney with light-frame construction above the top of the foundation. This is necessary if earthquake damage extends below the shoulder of the firebox. It is also appropriate where complete removal of fireplace masonry is preferred.

Exterior appearance: The entire height of the firebox and chimney is reconstructed and is often finished with siding or stucco, but can also be finished with adhered brick veneer to preserve the original appearance. None of the original brick masonry construction remains.

Interior appearance: Fireplace and mantel will be removed and replaced with factory-built fireplace unit. This can provide an opportunity to change or modernize the interior appearance or enhance the use of the fireplace.

Environmental: Fireplace can remain fuel-burning. Factory-built fireplace units can be more energy efficient at producing heat in the home, can reduce emissions through more complete combustion of solid fuels, or can be more environmentally friendly gas-burning.

Other Methods of Repair or Reconstruction

While the solutions detailed in this advisory are recommended as best practices, other code-conforming approaches for repair or reconstruction are possible:

- **Installation of concrete inside the flue.** In cases where the fireplace will not be used in the future, lightly damaged chimneys can sometimes be repaired and strengthened through the installation of rebar into the flue (over the full height) and by filling the flue with concrete. This approach reduces the potential for some types of damage, but the increased weight and difficulty in adequately anchoring the heavy chimney to the dwelling raises questions about the validity of this approach and the overall benefit for reducing future risk.
- **Engineered solutions.** Engineered solutions for reconstruction of damaged chimneys are possible. An engineered approach has the advantage that the solution can be customized for the specific situation, and can include a number of wide-ranging options for reinforcing or reconstructing the chimney and firebox. An engineered approach may be appropriate or necessary in some dwellings.
- **Reconstruction in-kind.** Although reconstruction of chimneys to their pre-earthquake configuration may be permitted by building codes in some jurisdictions, this approach does little to reduce the potential for future damage or risk to life-safety, and is not recommended.

Recommended Methods of Hazard Mitigation

Whether or not your chimney has been damaged, now is a good time to be thinking about mitigating the hazard associated with masonry chimneys before the next earthquake. Although they are presented as alternatives for repair and reconstruction after damage in an earthquake, the solutions detailed in this advisory are also recommended as best practices for pre-earthquake hazard mitigation (retrofit) of chimneys. As such they can be applied equally to undamaged chimneys.

Where it is not possible to implement these best practices outlined in this advisory, other steps can be taken before the next earthquake to partially reduce the risk posed by masonry chimneys, such as:

- Minimizing time spent next to the chimney, both inside and outside the dwelling. This will minimize the risk of serious injury should the chimney collapse. In particular, sleeping adjacent to a masonry chimney should be avoided.
- Installing plywood in the attic space, either attached to the underside of the roof rafters or the top of the ceiling joists. Plywood in the attic space is intended to slow or even prevent brick debris from coming through the ceiling into the living space in the event of chimney failure. This approach is easy and relatively inexpensive; however, the effectiveness is likely to vary widely from residence to residence. It is important that plywood installed for this purpose does not become used as an attic storage area, as this can overload the ceiling and roof systems and result in failure.

Several methods are NOT recommended for pre-earthquake mitigation. These include the following:

- Masonry chimneys should not be retrofitted using steel braces that extend down to the roof surface. Such bracing is thought to have promoted chimney failure in past earthquakes, and must be carefully engineered.
- Simply restoring the outside surface of deteriorated mortar joints (repointing) or patching of isolated masonry cracks is not sufficient. While such actions are encouraged as part of regular chimney maintenance, they will do little to reduce the potential for damage in future earthquakes.

General Information for Construction

Building Codes

Reconstruction of damaged chimneys must be in conformance with adopted building code provisions and local ordinances. Reconstruction must use manufactured parts (metal flues, anchor plates, flue caps, fireplace inserts, and factory-built fireplaces) meeting applicable Underwriters Laboratory (UL) Standards (commonly referred to as UL listed). For manufactured parts, installation in accordance with the manufacturer's installation instructions is mandatory. In addition, installation instructions impose some requirements on the surrounding construction, such as required dimensions and clearances.

Other parts of the reconstruction are required to be in accordance with applicable provisions of the adopted building or residential code. Most states and local jurisdictions base their residential code on a recent edition of the International Residential Code (IRC) (ICC, 2015). In California, this results in the California Residential Code (CRC) (CBSC, 2013), which can be further amended by the local building official.

This recovery advisory does not attempt to provide an exhaustive list of applicable building codes. Some limited sections of interest are summarized below. Persons designing or performing repair work are advised to become familiar with applicable requirements.

Scope of Work

For dwellings in California, repair of damage does not trigger requirements for seismic strengthening beyond the scope of repair (California Building Code Section 3405.1.2 (HCD 1)) (CBSC, 2013). The only exception is where conditions exist that are judged by the building official to result in substandard building conditions, in which case additional work to correct the substandard conditions would be required.

Building Permit

A building permit is required for work described in this advisory and must be obtained prior to the start of construction work.

California Residential Code Sections of Interest

For foundation extension:	Minimum concrete strength of 2500psi per Section R402.2
	Minimum depth of foundation, 12 inches below grade Section R403.1.4
For bolting to concrete beam:	Sections R403.1.6 and R603.3.1
For cold-formed steel stud walls:	Section R603
For fireplace and chimney construction:	Chapter 10
For roof flashing and crickets:	Section R905
For chimney enclosure wall covering:	Chapter 7

Dwellings with a Historic Designation

Older dwellings may have a historic designation, indicating that they are deemed to be historically significant. This designation can be given at the Federal (National Register of Historic Places), State (State Register of Historic Places) or local level, and local building departments generally have a list of buildings with such designation. For historic dwellings, further consideration of repair methods that preserve the existing historic construction and appearance are appropriate. Historic designation may come with additional requirements such as historic preservation guidelines, and review of planned repairs by the local planning department and historic preservation board. Historic designation may also permit flexibility regarding reconstruction methods and materials, including reconstruction of damaged masonry chimneys using matching masonry. Where such reconstruction is used, an engineered solution is recommended and a structural engineer should develop the best approach for mitigating future earthquake hazard. Owners of dwellings that may have a historic designation should consult with the building department regarding applicable requirements.

Alternative A: Capping of Chimney at Roof Level

Overview

For single story dwellings, where the chimney is damaged at or above the roof level and it is not intended that the fireplace be used in the future, it is possible to remove the chimney down to the roof line and install a sheet metal cap over the chimney for weather protection.

This alternative provides the greatest hazard reduction for chimneys that extend a considerable distance above the roof line, and less benefit for short chimneys.

It is recommended that the chimney be removed to a distance of three to six inches above the adjacent roof. This will permit a sheet metal cap that extends several inches down each side of the chimney to be installed, providing a flashing. The cap should be secured to the masonry.

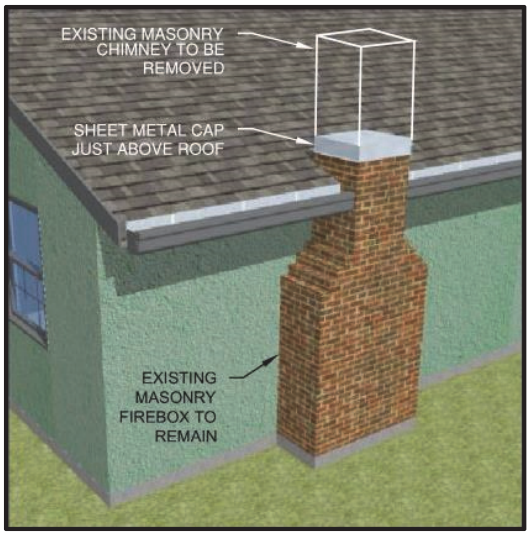

Figure 3: Dwelling with a chimney capped at the roof line.

The interior of the firebox will need to be closed off to prevent any possible use of the fireplace. For least impact on interior appearance, plywood can be installed across the fireplace opening, set back into the fireplace, and painted to match interior finishes.

Although capping eliminates the hazard associated with the most vulnerable portion of the chimney (above the roof), there is still risk of damage or collapse of the remaining masonry in future earthquakes.

Alternative B: Reconstruction from Top of Firebox Up, Maintaining Existing Fireplace

Overview

Alternative B permits continued use of an undamaged firebox in combination with a new chimney. Instead of using a conventional masonry chimney with a clay flue liner, the new chimney is constructed using a lightweight metal flue contained in a cold-formed steel stud chimney enclosure, as shown in Figure 4. This lightweight, flexible construction is much more resistant to damage in future earthquakes. Although the remaining masonry firebox could be damaged in a future earthquake, the firebox is much less vulnerable to damage than the original masonry chimney. As a result, the risk of collapse and the associated risk to life safety are greatly reduced when this reconstruction alternative is implemented.

Figure 4: Dwelling with chimney reconstructed from the firebox up.

Primary Components

The primary components of Alternative B construction are listed below, illustrated in Figure 5. Additional details of construction are provided in Figures 6 and 7.

1. **Masonry firebox.** *Inspect the firebox to verify that it is in good condition prior to start of repair work.*
2. **Existing framing.** *To remain as is except for roof blocking as detailed in Figure 7 and Item 7 below.*
3. **Masonry veneer.** *Verify support and anchorage of existing veneer where it occurs above and surrounding the fireplace.*

4. **Firebox to flue transition.** *The transition from the masonry firebox to the metal flue includes: anchorage to masonry, concrete bond beam, steel adapter cone, and anchor plate. This detail is critical to the safe performance of this reconstruction alternative. See Figure 6 for more information.*
5. **Cold-formed steel track.** *Anchor track to concrete beam per Figure 6.*
6. **Cold-formed steel stud wall.** *Provide full height studs.*
7. **Chimney connection to dwelling.** *Provide stud blocking and steel strap connection to existing dwelling framing at upper floor, ceiling, and roof framing.*
8. **Insulation.** *Provide insulation between studs at exterior walls of the chase, allowing for the proper clearances in accordance with the manufacturer's installation instructions.*
9. **Metal flue.** *Provide UL Standard 103 listed metal flue, installed in accordance with manufacturer's instructions. Provide as large a flue as can be installed in available space while still meeting minimum clear distances.*
10. **Flue cap.** *Install flue cap supplied by flue manufacturer as part of the flue assembly.*
11. **Fire blocking.** *Provide fire blocking between chimney chase and attic as required by the building code.*

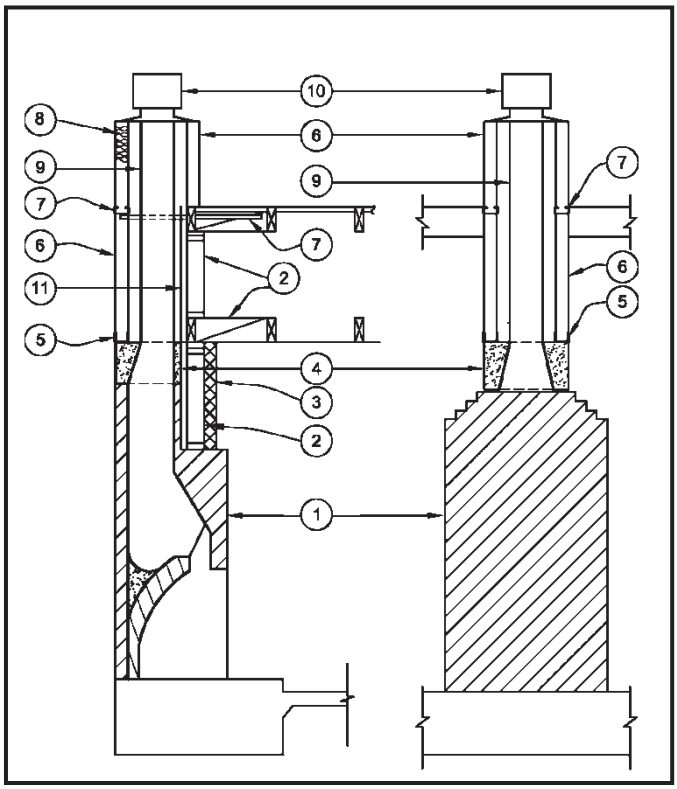

Figure 5: Components of a masonry firebox in combination with lightweight metal flue and chimney (Alternative B).

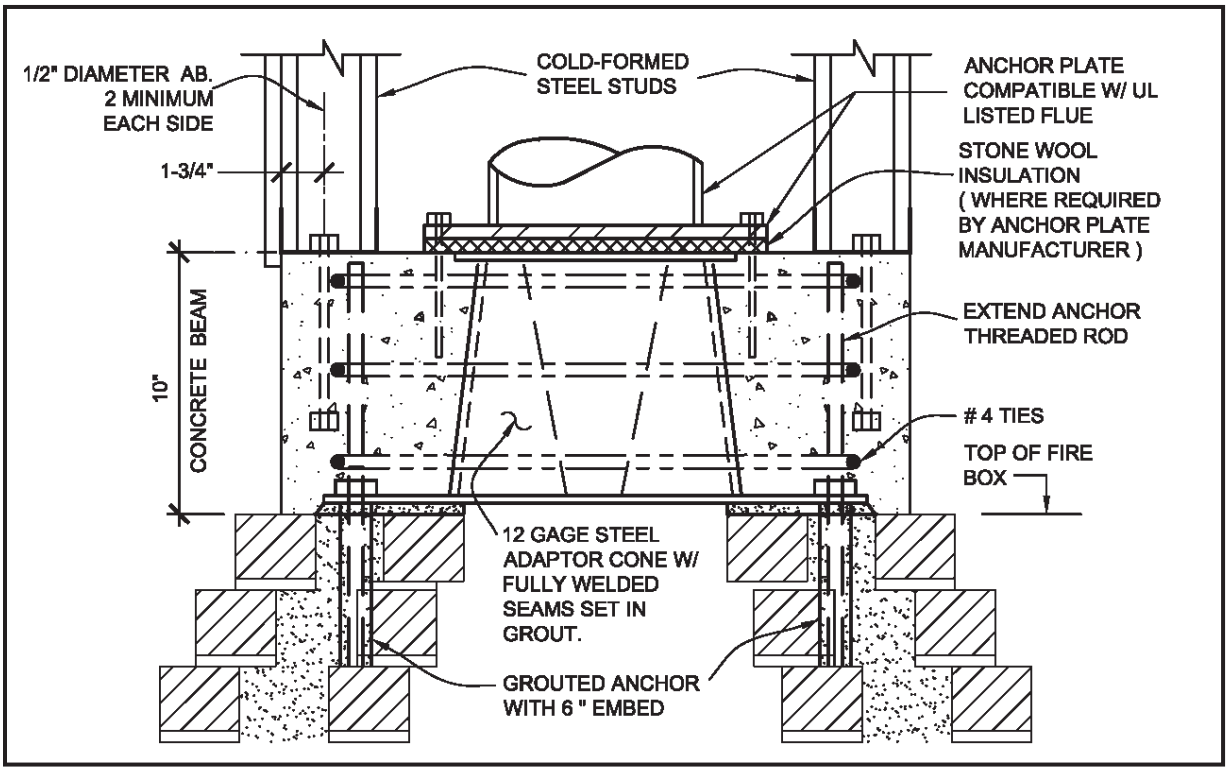

Figure 6: Example of detail at masonry firebox transition to metal flue and light-frame chimney (Alternative B, similar detail for Alternative C).

Requirements for Flue Transitions and Components

Figure 6 provides details for the transition from the masonry firebox to the metal flue and stud wall chimney chase. The components of this transition include the following:

- Fabricate a 12 gage (97 mil) minimum sheet steel adaptor cone as shown in Figure 6. The adaptor cone is to have minimum 12 gage (97 mil) sheet steel top and bottom plates as shown. This will likely need to be custom fabricated by a sheet metal shop for each chimney. All seams are to be fully welded. The adaptor cone is intended to provide a smooth-surfaced transition between the flue opening at the top of the firebox and the anchor plate and metal flue. The base plate geometry is to match the opening geometry at the top of the firebox, and the top plate geometry is to be coordinated with the anchor plate. The adaptor cone will also serve to minimize movement of heated gas through cracks that might form in the surrounding concrete beam. The adaptor cone is to be set in cementitious grout.
- Provide not less than four 1/2-inch diameter threaded rod anchors anchoring the adaptor cone base plate to the firebox masonry, as shown in Figure 6. Extend the threaded rods to one inch below the top of the concrete beam. Where the existing masonry is fully grouted at anchor locations, drill one-inch diameter holes six inches deep and set in high-strength grout. Where the existing masonry is not fully grouted, place threaded rods in cavity and grout the entire cavity.
- Place reinforcing steel (rebar) and construct a concrete beam around the adaptor cone, using the cone as the inside form. Maintain a minimum 1-1/2 inch clear distance between rebar and outside face of concrete.
- When required by anchor plate manufacturer, install stone wool (basalt) insulation board on top of the transition cone top plate as shown in Figure 6.
- Install fireplace anchor plate in accordance with the manufacturer's installation instructions. UL Standard 103a provides information on anchor plates; however, UL does not currently certify (list) these anchor plates. The provider of the metal chimney should provide an anchor plate that is intended for use with the chimney, and should verify that it has been tested per UL103a.
- Enclose the new flue in a light-frame chimney enclosure constructed of not less than 18 gage (43 mil) by 3-1/2 inch deep galvanized steel studs at not more than 12 inches on center. Install fire stops per code requirements. Fasten the steel studs to the existing residence exterior wall and tie the chimney framing into the existing roof framing with not less than 18 gage by 1-1/4 inch wide steel straps with not less than four #8 screws to the steel construction and four 8d common nails to existing wood construction.

Light-Frame Chimney Bracing to Roof

IRC and CRC requirements for the height of the chimney require that the top of the chimney extend three feet above the roof and not less than two feet above the elevation of the roof or other construction within a ten foot radius, as illustrated in Figure 7. This often requires that the chimney extend a significant distance above the roof line. Where this occurs, it is necessary to provide bracing of the chimney down to the roof. Such bracing should be provided in the upper third of the chimney clear height above the roof (H), as shown in Figure 7. Chimney bracing may also be required in Alternative C.

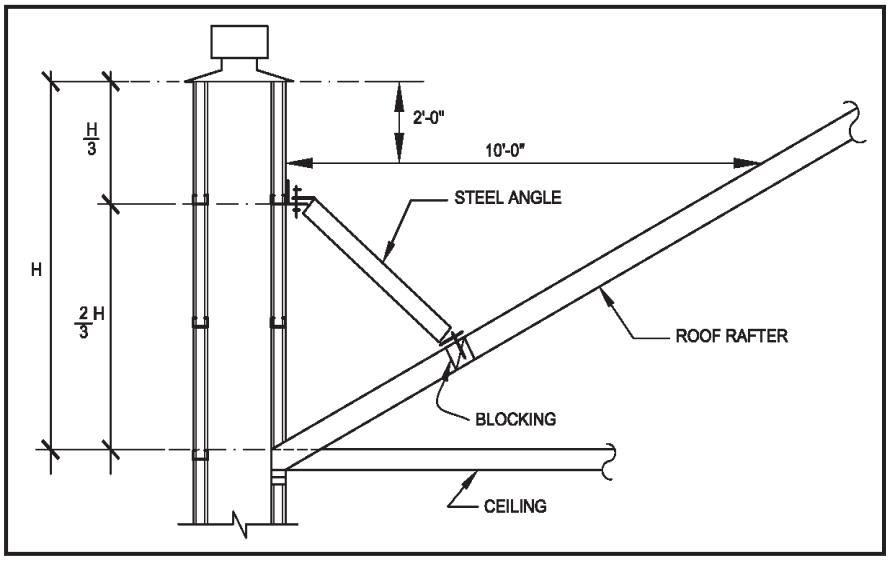

Figure 7: Bracing of light-frame chimney chase to roof (Alternatives B and C).

Alternative C: Reconstruction from the Top of Firebox, Using Fireplace Insert

Overview

Alternative C permits continued use of an undamaged masonry firebox in combination with a new chimney and fireplace insert. For decades wood-frame dwellings included a conventional masonry chimney and fireplace. However, many homes are now constructed with prefabricated fireplaces, or have had factory units inserted into the original masonry firebox (Figure 8). While a factory insert will not make a fireplace more earthquake-resistant, it can be more energy efficient and more ecologically friendly. Thus a factory-built fireplace insert may be a viable option at the time of the repair.

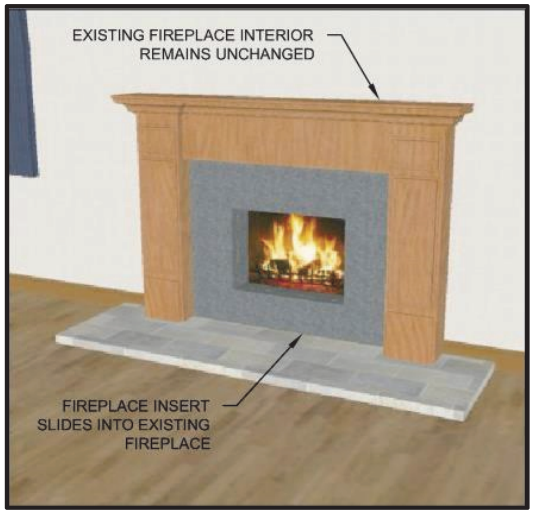

Figure 8: Fireplace insert

A factory-built fireplace insert provides a firebox within a steel or cast iron shell. The insert occupies the space of the original masonry firebox and utilizes the existing chimney chase. Building codes require that these systems be UL listed, and fireplace inserts often come packaged with a metal chimney as a certified system. (Homeowners are cautioned against using a chimney or connections not approved by the fireplace manufacturer. If your home already has a fireplace insert that utilizes the original masonry chimney liner, you will need to find a metal flue that is UL listed for use with your fireplace insert.)

Primary Components

The primary components of the installation of a fireplace insert into an existing masonry fireplace are listed below and illustrated in Figure 9. Items not noted are similar to information shown in Figure 5.

1. **Bottom connection.** *Secure bottom of fireplace insert.*
2. **Fireplace insert.** *Provide UL Standard 127 listed fireplace insert.*
3. **Damper and draft stop**. *Remove as required to install flue.*
4. **Flexible flue transition from insert to chimney.** *Install transition supplied as part of UL listed flue.*
5. **Metal flue connections**. *Install flue connections supplied as part of UL listed assembly.*
6. **Firebox to flue transition.** *Provide transition similar to that shown in Figure 6.*
7. **Metal chimney**. *Provide UL listed metal chimney.*
8. **Cold-formed steel stud wall.** *Provide chimney enclosure as described for Alternative B.*

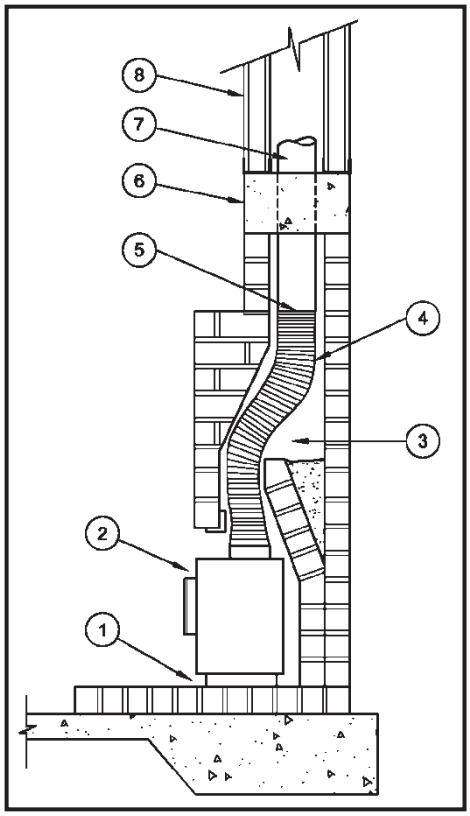

Figure 9: Components of a Factory-built Fireplace Insert (Alternative C).

Requirements for Fireplace Inserts

Installation of factory inserts must be done per the manufacturer's instructions and all applicable code requirements (consult your local building department). At a minimum, the following should be considered:

- Some homes have prefabricated chimneys that should not be equipped with an insert, or that greatly limit the inserts certified for such use. (It can be difficult to tell the difference between prefabricated and conventional masonry fireplaces without inspecting the inside of the firebox and flue connection.)

- Carefully check the dimensions to ensure the selected insert will fit properly. The size and location of the damper opening is particularly important. (If you are uncomfortable with this determination, enlist the help of a professional contractor.)
- The insert, chimney, and accessories must be certified per UL Standard 127 (listed and labeled as such). Your building official and contractor can assist with other local building code requirements.
- A hearth extension (UL 1618 listed) may be needed, particularly if the insert does not fit entirely within the firebox.
- The insert should be anchored to prevent shifting.
- Flue joints and connection to the fireplace must be per the manufacturer's instructions and UL standards.

Masonry Firebox Transition to Light-Frame Chimney

This method of reconstruction requires a transition from the firebox to the metal flue and stud wall chimney chase, similar to that shown in Figure 6 for Alternative B. Alternative C is different in that the metal flue runs continuous past the concrete bond beam. See installation instructions for required clear distance between bond beam and flue.

Light-Frame Chimney Bracing to Roof

This method of reconstruction is also subject to IRC and CRC chimney height requirements and chimney bracing may be required. See light-frame chimney bracing requirement in Figure 7 under Alternative B for more details.

Alternative D: Full Reconstruction of Firebox and Chimney

Overview

If earthquake damage extends below the shoulder of the firebox or if complete removal of all masonry is preferred, the entire firebox and chimney can be replaced from the top of foundation up. This involves installing a factory-built fireplace and metal flue inside a cold-formed steel stud chimney chase, as seen in Figure 10. This type of lighter and more flexible construction avoids many of the issues that have made masonry fireplaces and chimneys vulnerable to damage in past earthquakes. If preserving the architectural aesthetic of masonry is important, adhered masonry veneer can be used.

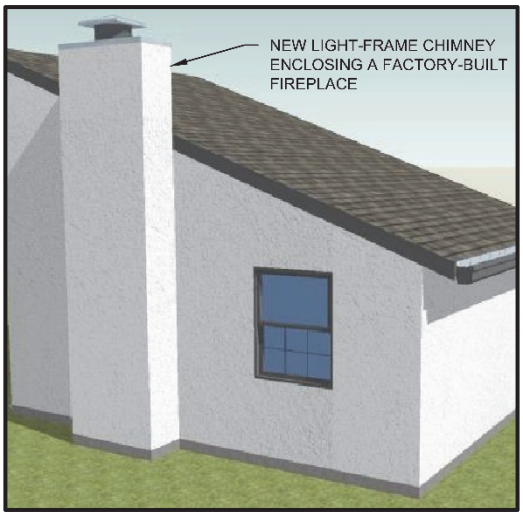

Figure 10: Replacement of entire firebox and chimney with light-frame construction.

Primary Components

The primary components of Alternative D construction are listed below and illustrated in Figure 11.

1. **Existing foundation.** *To remain.*
2. **Extension of existing foundation.** *Provide where required to meet dimensional requirements specified by the fireplace manufacturer. Where foundation extension is required, match the depth of the existing foundation, but not less than 12 inches below grade. Provide No. 4 rebar top and bottom of new concrete. Epoxy dowel to the existing footing at not more than 12 inches on center. See the applicable building code for additional requirements.*
3. **Non-combustible hearth extension.** *Provide hearth extension not less than 20 inches in depth.*
4. **Factory-built fireplace.** *Provide UL Standard 127 listed fireplace.*
5. **Cold-formed steel track.** *Anchor track to concrete foundation.*
6. **Cold-formed steel stud wall.** *Provide full height studs.*

7. **Existing framing.** *Framing may require modification to accommodate new fireplace opening. Use applicable building code provisions.*
8. **Metal flue.** *Provide UL listed metal flue supplied by fireplace manufacturer and to be installed in accordance with their installation instructions.*
9. **Stud blocking.** *Provide continuous blocking at 4'-0" maximum vertical spacing.*
10. **Insulation.** *Provide insulation between studs at exterior walls of the chase, allowing for the proper clearances in accordance with the manufacturer's installation instructions.*
11. **Chimney connection to dwelling.** *Provide stud blocking and steel strap connection to existing dwelling framing at upper floor, ceiling, and roof.*
12. **Existing framing.** *To remain.*
13. **Light-frame wall.** *From roof up.*
14. **Chimney cap.** *Provide framed chimney cap on chimney chase.*
15. **Flue cap.** *Install flue cap supplied by flue manufacturer.*
16. **Fire blocking.** *Provide fire blocking between chimney chase and attic.*

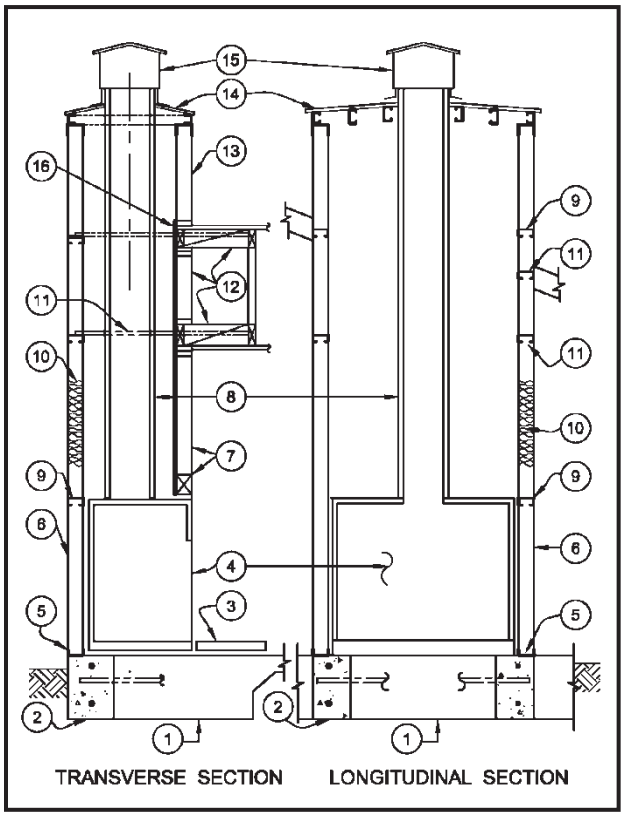

Figure 11: Components of a factory-built fireplace in light-frame chimney chase (Alternative D).

Requirements for Removal and Replacement of the Firebox

- Remove all existing masonry above the foundation.
- Fireboxes often extend a foot or more into the dwelling living space. Removal will need to include the interior portions of the masonry firebox. Mantels and shelves that are supported off of the firebox will likely need to be removed, but might be later reinstalled, supported off the dwelling wall.
- Masonry veneer is sometimes used as the interior finish for the wall around the fireplace. Where this is the case, this veneer will likely need to be removed to allow framing modifications and fireplace installation. If the veneer is to be reinstalled, details should conform to applicable provisions of IRC or CRC Chapter 7.
- Portions of the exterior wall, floor, ceiling, or roof of the dwelling could potentially be supported on the masonry firebox. Where this is the case, these elements of the dwelling will need to be re-supported. Modifications to dwelling framing should conform to applicable provisions of the IRC or CRC.
- Minimum dimensional requirements are provided in the manufacturer's installation instructions. These will determine the required depth and width of the chimney chase, as well as the size of the interior fireplace opening. It is possible that these dimensions will exceed current dimensions, requiring extension of the foundation and enlargement the framed wall opening. These modifications should be made in accordance with the IRC or CRC.
- Factory-built fireplace, flue and chimney cap should conform to UL Standard 127 and should be installed in accordance with the manufacturer's installation instructions.

Resources and other Useful Links

- Association of Bay Area Governments, **Training Materials for Seismic Retrofit of Wood-Frame Homes**. http://www.abag.ca.gov/bayarea/eqmaps/fixit/training.html

- California Governor's Office of Emergency Services and FEMA, **Guidelines to Strengthen and Retrofit your Home before the Next Earthquake**, Revised October, 2000. http://www.cupertino.org/Modules/ShowDocument.aspx?documentid=527
- California Seismic Safety Commission, **Homeowner's Guide to Earthquake Safety**, 2005. http://www.seismic.ca.gov/pub/CSSC_2005-01_HOG.pdf
- CBSC, **2013 California Building Code**, California Building Standards Commission, Sacramento, California. http://www.ecodes.biz/ecodes_support/Free_Resources/2013California/13Building/13Building_main.html
- CBSC, **2013 California Residential Code**, California Building Standards Commission, Sacramento, California. http://www.ecodes.biz/ecodes_support/Free_Resources/2013California/13Residential/13Residential_main.html
- City of Los Angeles, Department of Building and Safety, **P/BC 2008-070: Reconstruction and Replacement of Earthquake Damaged Masonry Chimneys**, 2008. http://ladbs.org/LADBSWeb/LADBS_Forms/InformationBulletins/IB-P-BC2008-070EQDamagedChimney.pdf
- City of Napa, Community Development Department, **Retrofitting Masonry Fireplace with Factory Built Metal Chimney**. http://www.cityofnapa.org/images/CDD/buildingdivdocs/handoutsanddetails/retro_fitting_masonry_fireplace_with_factory_built_metal_chimney.pdf
- City of San Luis Obispo, Building & Safety Division, **Reconstruction and Replacement of Earthquake Damaged Masonry Chimneys**, January 2004. http://www.slocity.org/communitydevelopment/build/infobull1.pdf
- City of Seattle, Department of Planning and Development, **Director's Rule 5-2004: Alteration and Repair of Unreinforced Masonry Chimneys**. http://www.seattle.gov/dpd/codes/dr/DR2004-5.pdf
- Consortium of Universities for Research in Earthquake Engineering, **EDA-02: General Guidelines for the Assessment and Repair of Earthquake Damage in Residential Woodframe Buildings**, February 2010. http://www.curee.org/projects/EDA/docs/CUREE-EDA02-2-public.pdf
- Federal Emergency Management Agency, **FEMA 232: Homebuilders' Guide to Earthquake-Resistant Design and Construction**, June 2006. https://www.fema.gov/media-library/assets/documents/6015
- Federal Emergency Management Agency, **FEMA 547: Techniques for the Seismic Rehabilitation of Existing Buildings, 2006 Edition**. http://www.fema.gov/media-library-data/20130726-1554-20490-7382/fema547.pdf
- Federal Emergency Management Agency, **FEMA E-74: Reducing the Risks of Nonstructural Earthquake Damage—A Practical Guide, Fourth Edition**, December 2012. https://www.fema.gov/earthquake-publications/fema-e-74-reducing-risks-nonstructural-earthquake-damage
- ICC, **2015 International Residential Code**, International Code Council, Country Club Hills, Illinois.

For more information, see the FEMA Building Science Frequently Asked Questions web site at http://www.fema.gov/frequently-asked-questions.

If you have any additional questions on FEMA Building Science Publications, contact the helpline at FEMA-Buildingsciencehelp@fema.dhs.gov or 1-866-927-2104.

You may also sign up for a FEMA Building Science e-mail subscription, which is updated with publication releases and FEMA Building Science activities. Subscribe at https://public. govdelivery.com/accounts/USDHSFEMA/subscriber/new?topic_id=USDHSFEMA_193.

Visit the Building Science Branch of the Risk Reduction Division at FEMA's Federal Insurance and Mitigation Administration at http://www.fema.gov/building-science.

To order publications, contact the FEMA Distribution Center:

Call: 1-800-480-2520 (Monday–Friday, 8 a.m.–5 p.m., EST) Fax: 240-699-0525

E-mail: FEMA-Publications-Warehouse@fema.dhs.gov

Additional FEMA documents can be found electronically in the FEMA Library at http://www.fema.gov/library.

Please scan this QR code to visit the FEMA Building Science Web page.