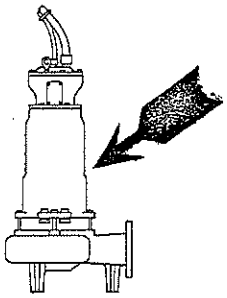

Performance Curve

S4M/S4MX

RPM: **1750** Discharge: **4"** Solids: **3"**

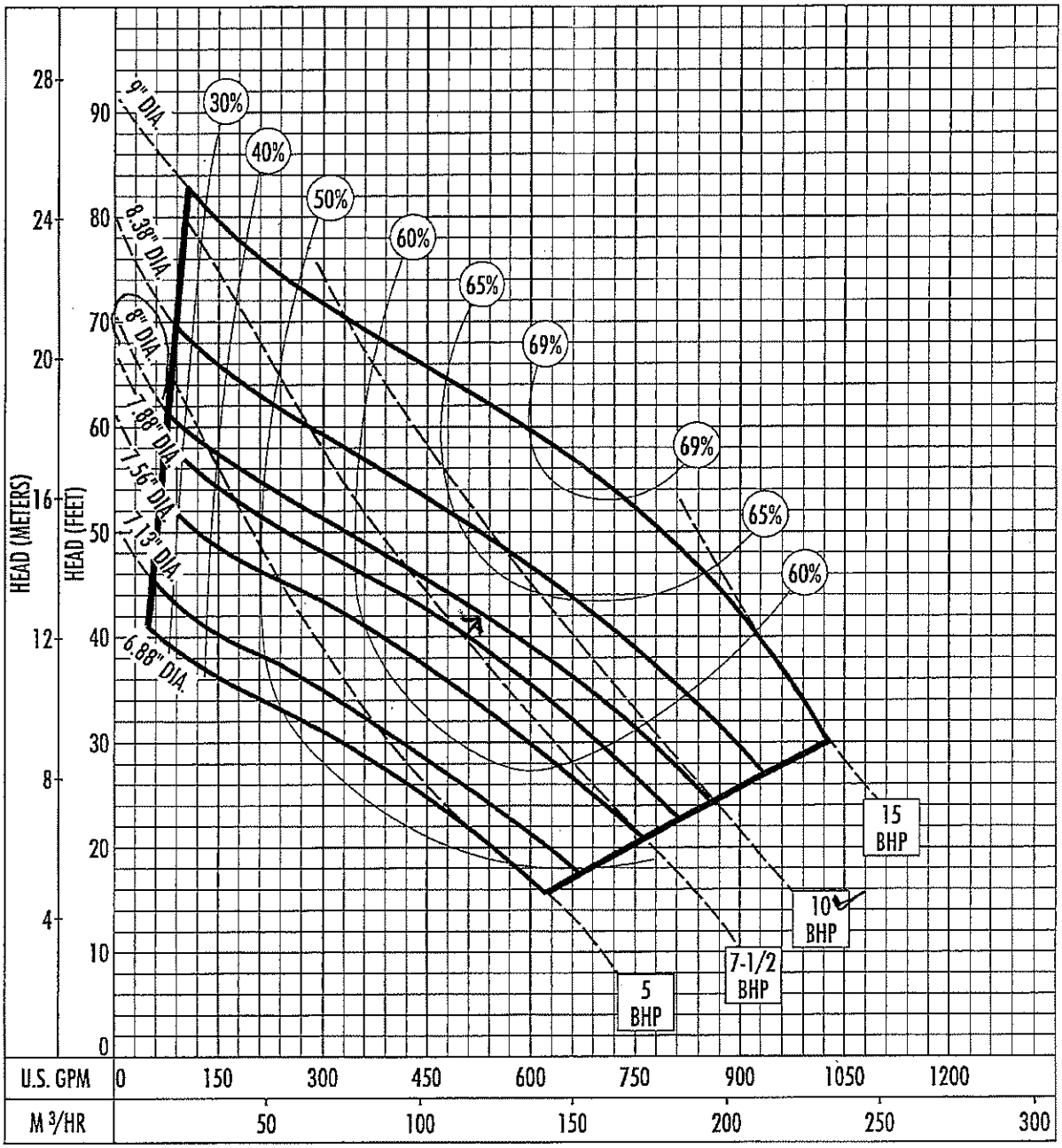

The curves reflect maximum performance characteristics without exceeding full load (Nameplate) horsepower. All pumps have a service factor of 1.2. Operation is recommended in the bounded area with operational point within the curve limit. Performance curves are based on actual tests with clear water at 70° F. and 1280 feet site elevation.

Conditions of Service:

GPM: 530 TDH: 42

HYDROMATIC®

PARSON & SANDERSON, INC.

405 COMMERCE POINT
HARAHAN, LA 70123

DATE: JULY 22, 2008

JOB V1-07 CLAIBORNE - LANDRY PUMP STATION

ST BERNARD PARISH, LOUISIANA

CONTRACTOR BLD SERVICES

ENGINEER ENVIRONMENTAL ENGINEERING SERVICES, INC.

SERVICE RAW DOMESTIC SEWERAGE

PUMP DATA: TYPE SUBMERSIBLE NON-CLOG SIZE 4" DISCHARGE

GPM 390 TDH 30 RPM 1750 CURVE PG. 109 IMPEL. DIA. 7.0"

CONSTRUCTION: HYDROMATIC S4NX500JC

- ☐ BRONZE FITTED
- ☐
- ☒ ALL IRON
- ☒ MECHANICAL SEAL
- ☐
- ☐ (DOUBLE) PACKED
- ☐

BASE:
- ☒ CAST IRON
- ☐ CHANNEL STEEL

DRIVE:
- ☐ DIRECT
- ☐ V-BELT
- ☒ CLOSE COUPLED
- ☒ SUBMERSIBLE

SPECIAL REQUIREMENTS: OIL COOLED MOTOR, 35' PUMP, POWER & SENSOR CORDS, S.S. FASTENERS, S.S. PUMP SHAFT, S.S. PUMP SHAFT SLEEVE, PERM. LUBRICATED BALL BEARINGS, MOTOR OVER-TEMP SENSOR, MOISTURE SENSOR, S.S.WEAR RING, EPOXY SEALED CORDS & NON-OVERLOADING EXPLOSION-PROOF MOTOR WITH CLASS "H" INSULATION.

MOTOR DATA

MFR HYDROMATIC HP 5 RPM 1750 FRAME N/A

PHASE 3 CYCLE 60 VOLTS 240 ENCLOSURE X-PROOF

AUXILIARY EQUIPMENT

(2) 4" PUMPS W/35' CORDS, (2) 4" BASE 90° PUMP ELBOWS, (2) 4" PUMP SEAL FLANGES, (4) 2" S.S. PUMP GUIDE RAILS & BRACKETS, (2) S.S. PUMP LIFT CABLES, (1) S .S. CORD/CABLE HANGER BRACKET.

EXISTING HATCH TO REMAIN

------- PLEASE VERIFY VOLTAGE, PHASE & POWER CORD LENGTH-------

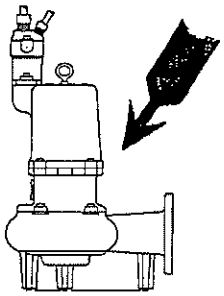

Performance Curve

S4N/S4NS/S4NX

RPM: **1750** Discharge: **4"** Solids: **3"**

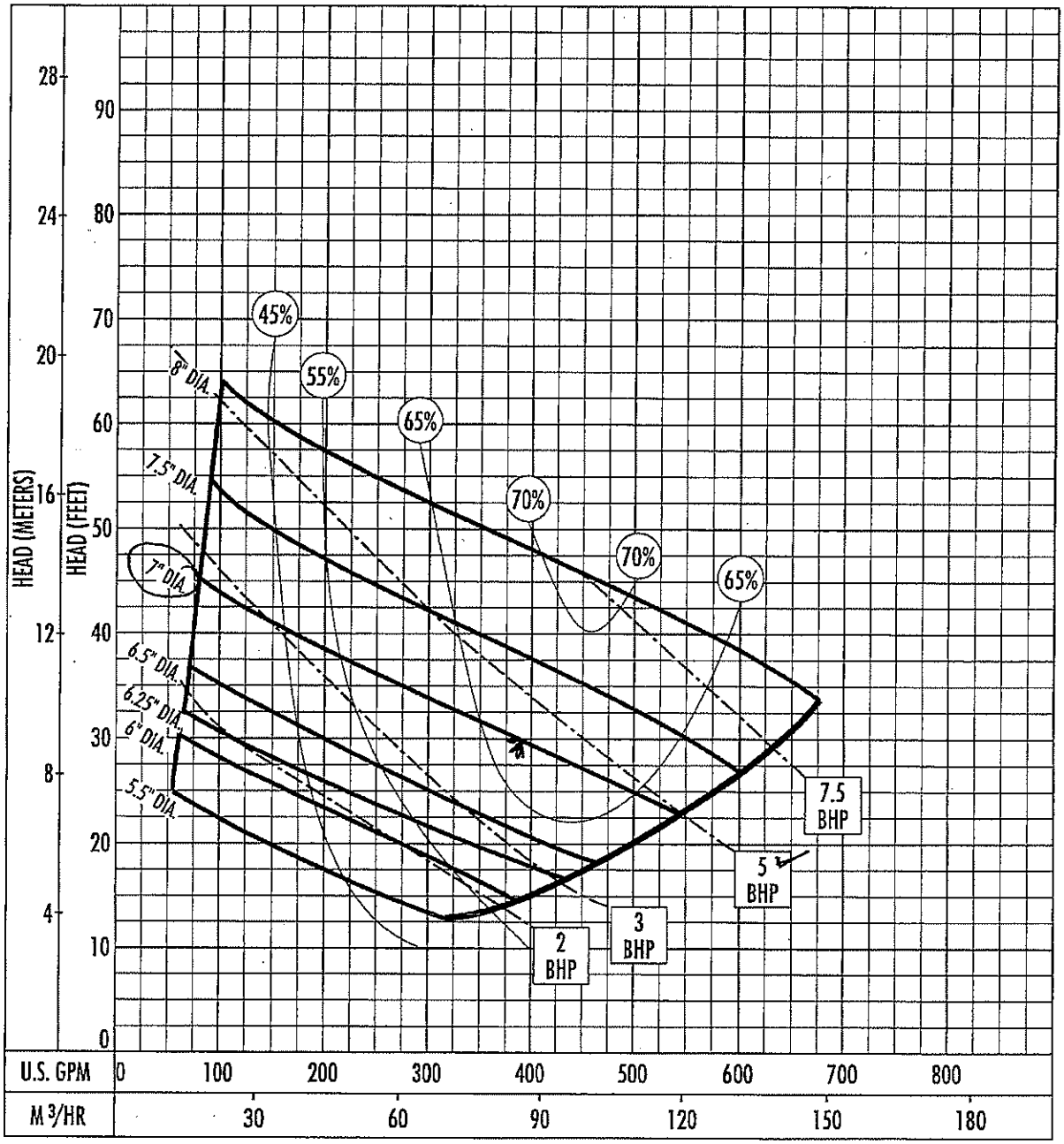

The curves reflect maximum performance characteristics without exceeding full load (Nameplate) horsepower. All pumps have a service factor of 1.2. Operation is recommended in the bounded area with operational point within the curve limit. Performance curves are based on actual tests with clear water at 70° F. and 1280 feet site elevation.

Conditions of Service:

GPM: 390 TDH: 30

HYDROMATIC®

PARSON & SANDERSON, INC.

405 COMMERCE POINT
HARAHAN, LA 70123

DATE: JULY 22, 2008

JOB V1-08 FABLE - LEGEND PUMP STATION

ST BERNARD PARISH, LOUISIANA

CONTRACTOR BLD SERVICES

ENGINEER ENVIRONMENTAL ENGINEERING SERVICES, INC.

SERVICE RAW DOMESTIC SEWERAGE

PUMP DATA: TYPE SUBMERSIBLE NON-CLOG SIZE 4" DISCHARGE

GPM 350 TDH 20 RPM 1750 CURVE PG. 109 IMPEL. DIA. 6.25"

CONSTRUCTION: HYDROMATIC S4NX300JC

- ☐ BRONZE FITTED
- ☐
- ☒ ALL IRON
- ☒ MECHANICAL SEAL
- ☐
- ☐ (DOUBLE) PACKED
- ☐

BASE:
- ☒ CAST IRON
- ☐ CHANNEL STEEL

DRIVE:
- ☐ DIRECT
- ☐ V-BELT
- ☒ CLOSE COUPLED
- ☒ SUBMERSIBLE

SPECIAL REQUIREMENTS: OIL COOLED MOTOR, 35' PUMP, POWER & SENSOR CORDS, S.S. FASTENERS, S.S. PUMP SHAFT, S.S. PUMP SHAFT SLEEVE, PERM. LUBRICATED BALL BEARINGS, MOTOR OVER-TEMP SENSOR, MOISTURE SENSOR, S.S.WEAR RING, EPOXY SEALED CORDS & NON-OVERLOADING EXPLOSION-PROOF MOTOR WITH CLASS "H" INSULATION.

MOTOR DATA

MFR HYDROMATIC HP 3 RPM 1750 FRAME N/A

PHASE 3 CYCLE 60 VOLTS 240 ENCLOSURE X-PROOF

AUXILIARY EQUIPMENT

(2) 4" PUMPS W/35' CORDS, (2) 4" BASE 90° PUMP ELBOWS, (2) 4" PUMP SEAL FLANGES, (4) 2" S.S. PUMP GUIDE RAILS & BRACKETS, (2) S.S. PUMP LIFT CABLES, (1) GALV STEEL H-20 PUMP ACCESS DOOR & FRAME WITH LIFTING SPRINGS, (1) S .S. CORD/CABLE HANGER

------- PLEASE VERIFY VOLTAGE, PHASE & POWER CORD LENGTH-------

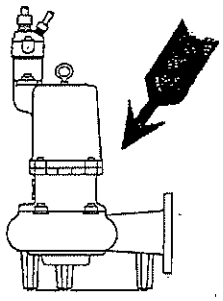

Performance Curve

S4N/S4NS/S4NX

RPM: **1750** Discharge: **4"** Solids: **3"**

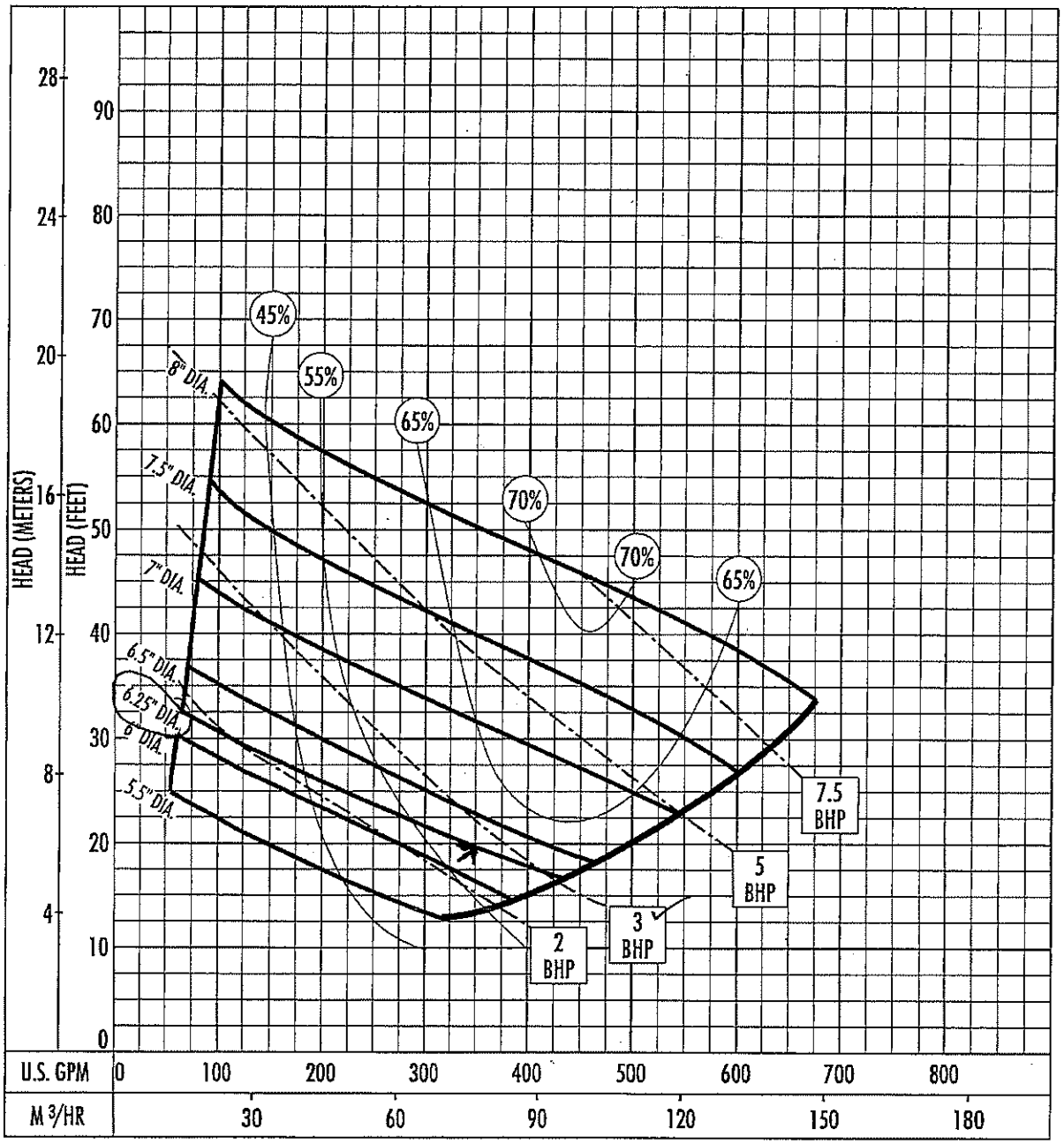

The curves reflect maximum performance characteristics without exceeding full load (Nameplate) horsepower. All pumps have a service factor of 1.2. Operation is recommended in the bounded area with operational point within the curve limit. Performance curves are based on actual tests with clear water at 70° F. and 1280 feet site elevation.

Conditions of Service:

GPM: 350 TDH: 20

HYDROMATIC®

PARSON & SANDERSON, INC.

405 COMMERCE POINT
HARAHAN, LA 70123

DATE: JULY 22, 2008

JOB V1-09 MAUREEN - CLAIBORNE PUMP STATION

ST BERNARD PARISH, LOUISIANA

CONTRACTOR BLD SERVICES

ENGINEER ENVIRONMENTAL ENGINEERING SERVICES, INC.

SERVICE RAW DOMESTIC SEWERAGE

PUMP DATA: TYPE SUBMERSIBLE NON-CLOG SIZE 4" DISCHARGE

GPM 400 TDH 30 RPM 1750 CURVE PG. 109 IMPEL. DIA. 7.0"

CONSTRUCTION: HYDROMATIC S4NX500JC

- ☐ BRONZE FITTED
- ☐
- ☒ ALL IRON
- ☒ MECHANICAL SEAL
- ☐
- ☐ (DOUBLE) PACKED
- ☐

BASE:
- ☒ CAST IRON
- ☐ CHANNEL STEEL

DRIVE:
- ☐ DIRECT
- ☐ V-BELT
- ☒ CLOSE COUPLED
- ☒ SUBMERSIBLE

SPECIAL REQUIREMENTS: OIL COOLED MOTOR, 35' PUMP, POWER & SENSOR CORDS, S.S. FASTENERS, S.S. PUMP SHAFT, S.S. PUMP SHAFT SLEEVE, PERM. LUBRICATED BALL BEARINGS, MOTOR OVER-TEMP SENSOR, MOISTURE SENSOR, S.S.WEAR RING, EPOXY SEALED CORDS & NON-OVERLOADING EXPLOSION-PROOF MOTOR WITH CLASS "H" INSULATION.

MOTOR DATA

MFR HYDROMATIC HP 5 RPM 1750 FRAME N/A

PHASE 3 CYCLE 60 VOLTS 240 ENCLOSURE X-PROOF

AUXILIARY EQUIPMENT

(2) 4" PUMPS W/ 35' CORDS, (2) S.S. PUMP LIFT CABLES,

(1) S .S. CORD/CABLE HANGER BRACKET.

NO GUIDE RAILS, EXISTING HATCH TO REMAIN

------- PLEASE VERIFY VOLTAGE, PHASE & POWER CORD LENGTH-------

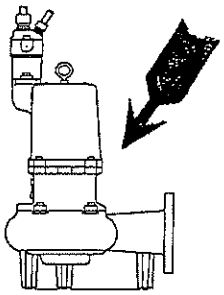

Performance Curve

S4N/S4NS/S4NX

RPM: **1750** Discharge: **4"** Solids: **3"**

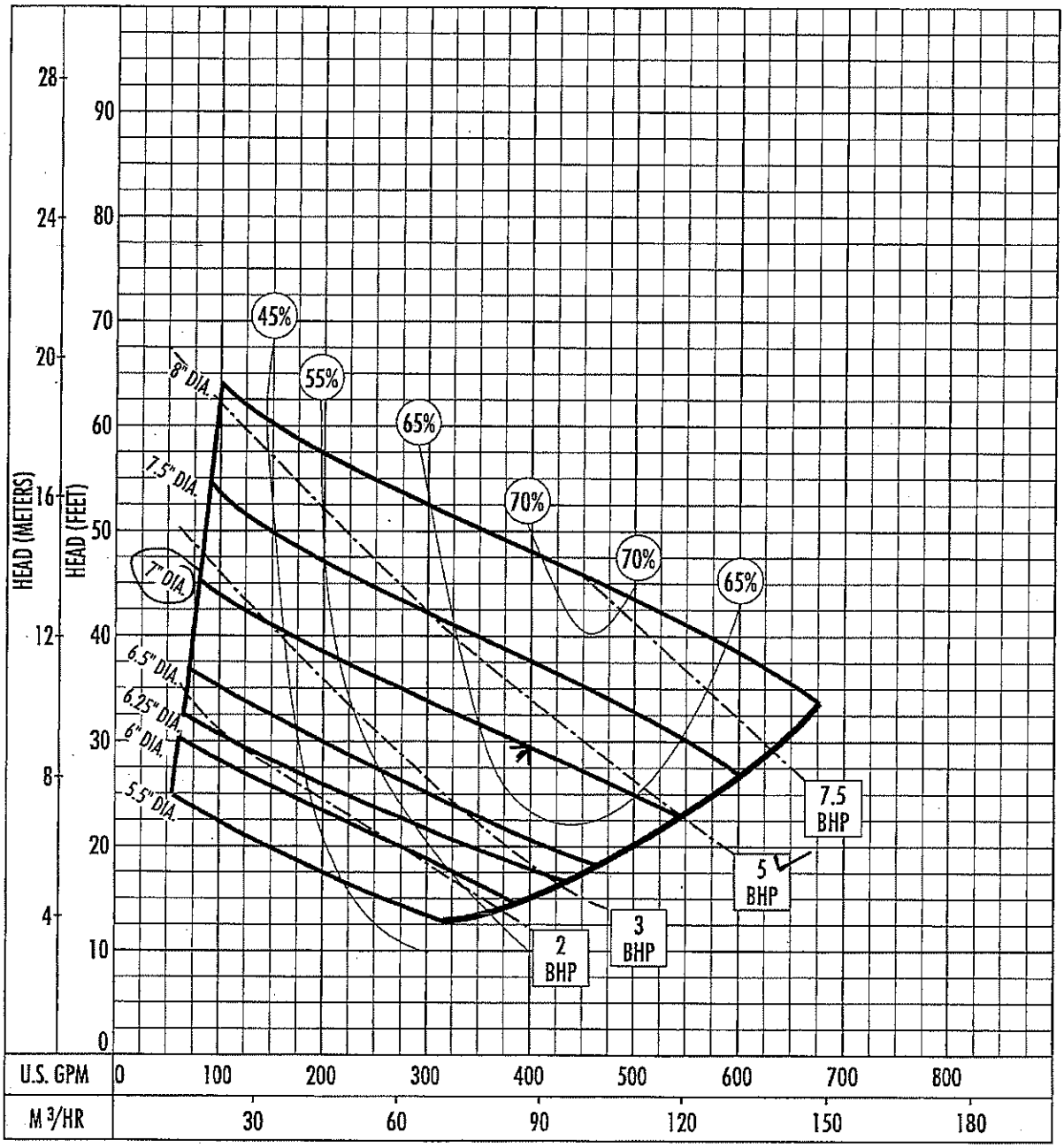

The curves reflect maximum performance characteristics without exceeding full load (Nameplate) horsepower. All pumps have a service factor of 1.2. Operation is recommended in the bounded area with operational point within the curve limit. Performance curves are based on actual tests with clear water at 70° F. and 1280 feet site elevation.

Conditions of Service:

GPM: 400 TDH: 30

HYDROMATIC®

PARSON & SANDERSON, INC.

405 COMMERCE POINT
HARAHAN, LA 70123

DATE: JULY 22, 2008

JOB V1-10 CLAIBORNE - FRANCES – LIVACCARI PUMP STATION

ST BERNARD PARISH, LOUISIANA

CONTRACTOR BLD SERVICES

ENGINEER ENVIRONMENTAL ENGINEERING SERVICES, INC.

SERVICE RAW DOMESTIC SEWERAGE

PUMP DATA: TYPE SUBMERSIBLE NON-CLOG SIZE 4" DISCHARGE

GPM 475 TDH 44 RPM 1750 CURVE PG. 111 IMPEL. DIA. 8.0"

CONSTRUCTION: HYDROMATIC S4MX1000JC

- ☐ BRONZE FITTED
- ☐
- ☒ ALL IRON
- ☒ MECHANICAL SEAL
- ☐
- ☐ (DOUBLE) PACKED
- ☐

BASE:
- ☒ CAST IRON
- ☐ CHANNEL STEEL

DRIVE:
- ☐ DIRECT
- ☐ V-BELT
- ☒ CLOSE COUPLED
- ☒ SUBMERSIBLE

SPECIAL REQUIREMENTS: OIL COOLED MOTOR, 35' PUMP, POWER & SENSOR CORDS, S.S. FASTENERS, S.S. PUMP SHAFT, S.S. PUMP SHAFT SLEEVE, PERM. LUBRICATED BALL BEARINGS, MOTOR OVER-TEMP SENSOR, MOISTURE SENSOR, S.S.WEAR RING, EPOXY SEALED CORDS & NON-OVERLOADING EXPLOSION-PROOF MOTOR WITH CLASS "H" INSULATION.

MOTOR DATA

MFR HYDROMATIC HP 10 RPM 1750 FRAME N/A

PHASE 3 CYCLE 60 VOLTS 240 ENCLOSURE X-PROOF

AUXILIARY EQUIPMENT

(2) 4" PUMPS W/35' CORDS, (2) S.S. PUMP LIFT CABLES, (1) GALV STEEL H-20 W.W. PUMP DOOR & (1) S.S. HANGER BRACKET

PUMPS USE HOSE AND NO RAIL SYSTEM

------ PLEASE VERIFY VOLTAGE, PHASE & POWER CORD LENGTH------

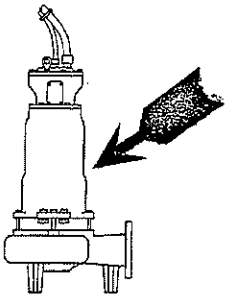

Performance Curve

S4M/S4MX

RPM: **1750** Discharge: **4"** Solids: **3"**

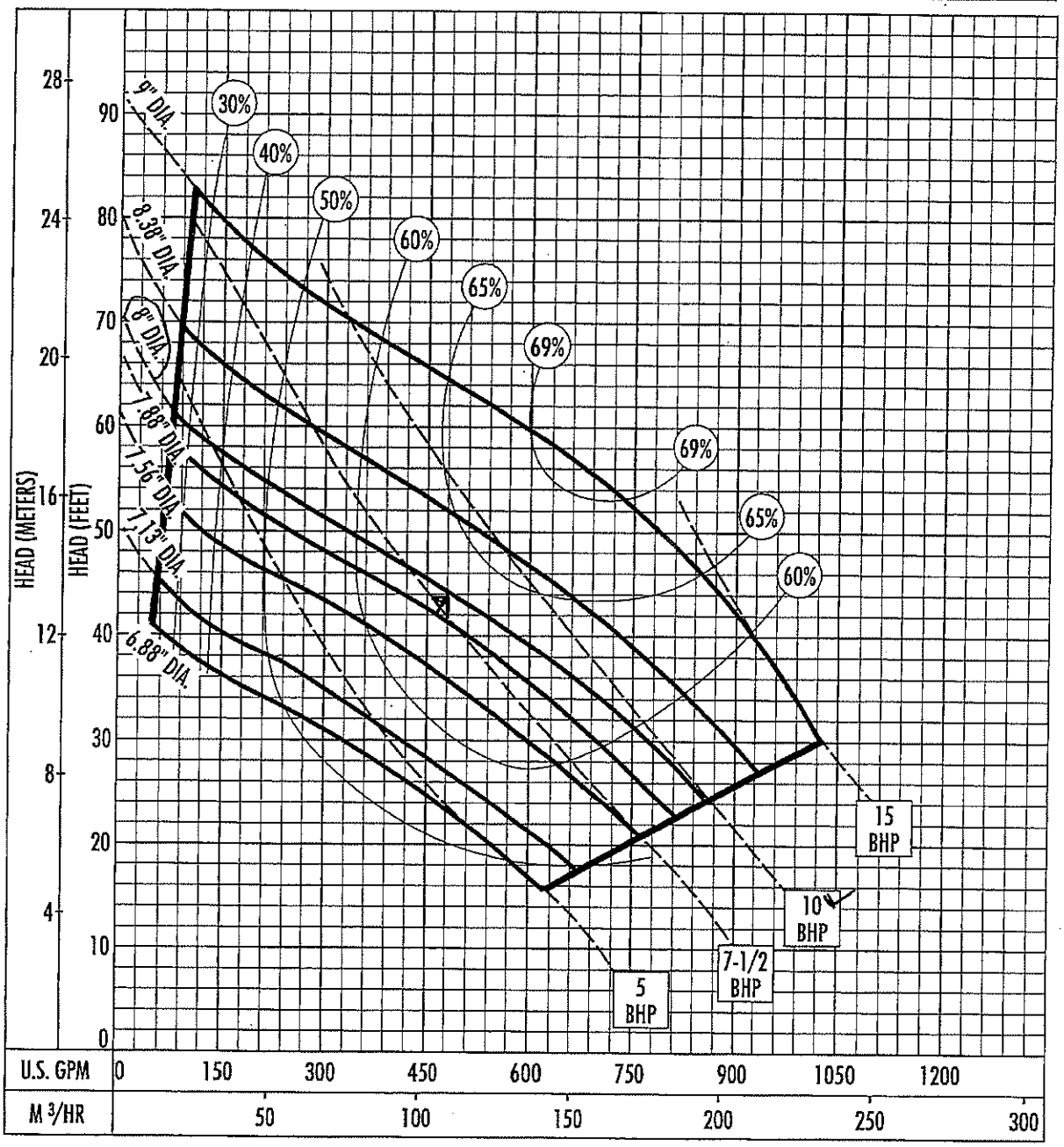

The curves reflect maximum performance characteristics without exceeding full load (Nameplate) horsepower. All pumps have a service factor of 1.2. Operation is recommended in the bounded area with operational point within the curve limit. Performance curves are based on actual tests with clear water at 70° F. and 1280 feet site elevation.

Conditions of Service:

GPM: 475 TDH: 44

HYDROMATIC®

PARSON & SANDERSON, INC.

405 COMMERCE POINT
HARAHAN, LA. 70123

DATE: JULY 22, 2008

JOB V1-11 CLAIBORNE – VALMAR PUMP STATION

ST BERNARD PARISH, LOUISIANA

CONTRACTOR BLD SERVICES

ENGINEER ENVIRONMENTAL ENGINEERING SERVICES, INC.

SERVICE RAW DOMESTIC SEWERAGE

PUMP DATA: TYPE SUBMERSIBLE NON-CLOG SIZE 4" DISCHARGE

GPM 125 TDH 27 RPM 1750 CURVE PG. 109 IMPEL. DIA. 6.25"

CONSTRUCTION: HYDROMATIC S4NX300JC

- ☐ BRONZE FITTED
- ☐
- ☒ ALL IRON
- ☒ MECHANICAL SEAL
- ☐
- ☐ (DOUBLE) PACKED
- ☐

BASE:
- ☒ CAST IRON
- ☐ CHANNEL STEEL

DRIVE:
- ☐ DIRECT
- ☐ V-BELT
- ☒ CLOSE COUPLED
- ☒ SUBMERSIBLE

SPECIAL REQUIREMENTS: OIL COOLED MOTOR, 35' PUMP, POWER & SENSOR CORDS, S.S. FASTENERS, S.S. PUMP SHAFT, S.S. PUMP SHAFT SLEEVE, PERM. LUBRICATED BALL BEARINGS, MOTOR OVER-TEMP SENSOR, MOISTURE SENSOR, S.S.WEAR RING, EPOXY SEALED CORDS & NON-OVERLOADING EXPLOSION-PROOF MOTOR WITH CLASS "H" INSULATION.

MOTOR DATA

MFR HYDROMATIC HP 3 RPM 1750 FRAME N/A

PHASE 3 CYCLE 60 VOLTS 240 ENCLOSURE X-PROOF

AUXILIARY EQUIPMENT

(2) 4" PUMPS W/35' CORDS, (2) 4" BASE 90° PUMP ELBOWS, (2) 4" PUMP SEAL FLANGES, (4) 2" S.S. PUMP GUIDE RAILS & BRACKETS, (2) S.S. PUMP LIFT CABLES, (2) ALUM H-20 PUMP W.W. & V.B. ACCESS DOOR & FRAME WITH LIFTING SPRINGS, (1) S .S. CORD/CABLE HANGER

------- PLEASE VERIFY VOLTAGE, PHASE & POWER CORD LENGTH-------

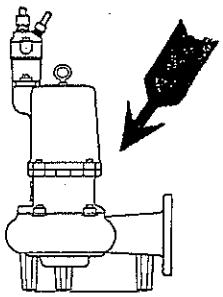

Performance Curve

S4N/S4NS/S4NX

RPM: **1750** Discharge: **4"** Solids: **3"**

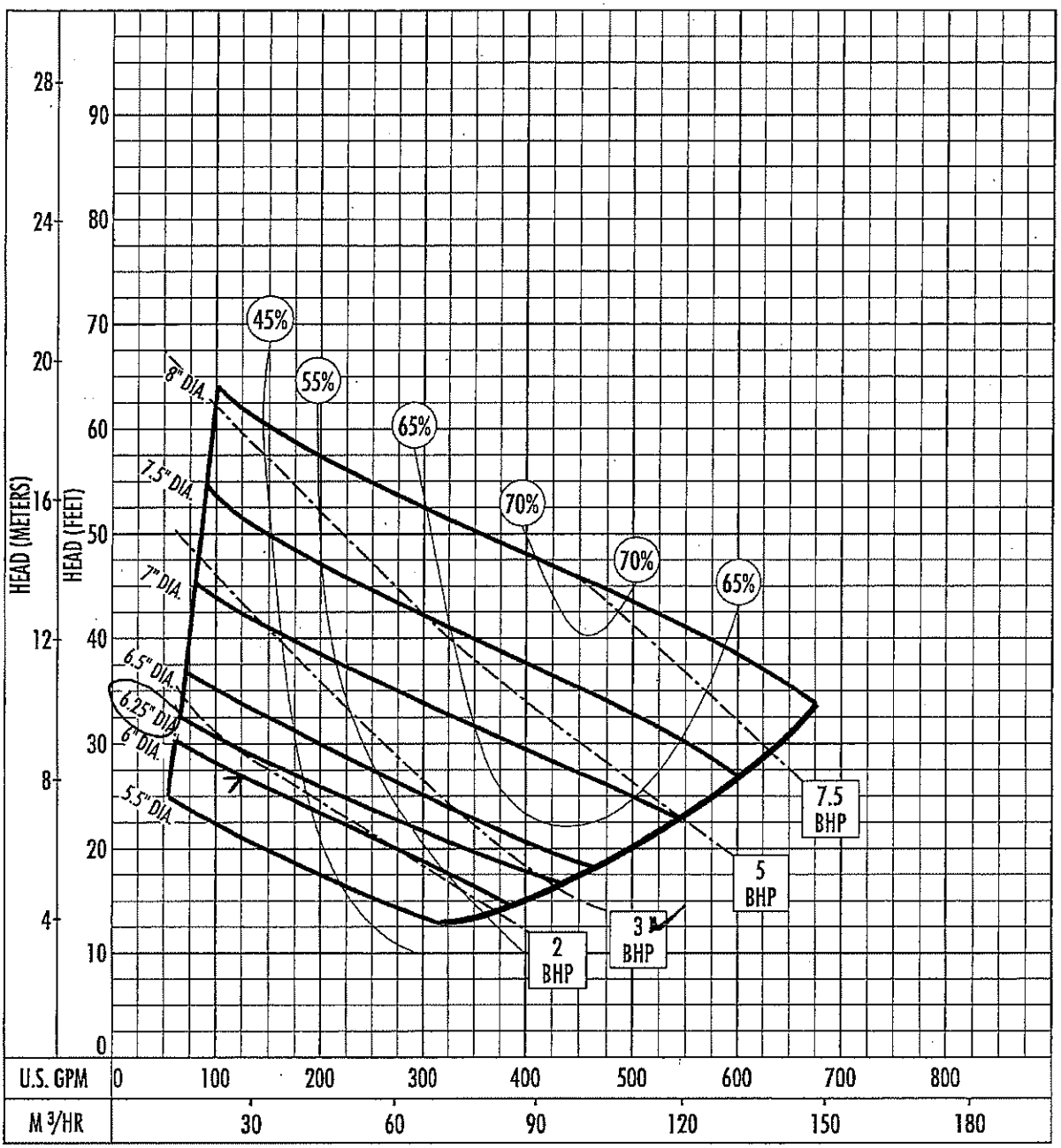

The curves reflect maximum performance characteristics without exceeding full load (Nameplate) horsepower. All pumps have a service factor of 1.2. Operation is recommended in the bounded area with operational point within the curve limit. Performance curves are based on actual tests with clear water at 70° F. and 1280 feet site elevation.

Conditions of Service:

GPM: 125 TDH: 27

HYDROMATIC®

PARSON & SANDERSON, INC.

405 COMMERCE POINT
HARAHAN, LA. 70123

DATE: OCT 16, 2008

JOB V1-12 PUMP STATION

ST BERNARD PARISH, LOUISIANA

CONTRACTOR BOH BROTHERS CONST LLC

ENGINEER ALL SOUTH CONSULTING ENGINEERS LLC

SERVICE RAW DOMESTIC SEWERAGE

PUMP DATA: TYPE SUBMERSIBLE NON-CLOG SIZE 4" DISCHARGE

GPM 250 TDH 13.5 RPM 1150 CURVE PG. 110 IMPEL. DIA. 7.0"

CONSTRUCTION: HYDROMATIC S4NX200EB

- ☐ BRONZE FITTED
- ☒ MECHANICAL SEAL
- ☐
- ☐
- ☒ ALL IRON
- ☐ (DOUBLE) PACKED
- ☐

BASE:

- ☒ CAST IRON
- ☐ CHANNEL STEEL

DRIVE:

- ☐ DIRECT
- ☐ V-BELT
- ☒ CLOSE COUPLED
- ☒ SUBMERSIBLE

SPECIAL REQUIREMENTS: OIL COOLED MOTOR, 35' PUMP, POWER & SENSOR CORDS, S.S. FASTENERS, S.S. PUMP SHAFT, S.S. PUMP SHAFT SLEEVE, PERM. LUBRICATED BALL BEARINGS, MOTOR OVER-TEMP SENSOR, MOISTURE SENSOR, S.S.WEAR RING, EPOXY SEALED CORDS & NON-OVERLOADING EXPLOSION-PROOF MOTOR WITH CLASS "H" INSULATION.

MOTOR DATA

MFR HYDROMATIC HP 2 RPM 1150 FRAME N/A

PHASE 3 CYCLE 60 VOLTS 240 ENCLOSURE X-PROOF

AUXILIARY EQUIPMENT

(2) 4" PUMPS W/35' CORDS, (2) 4" BASE 90° PUMP ELBOWS, (2) 4" PUMP SEAL FLANGES, (4) 2" S.S. PUMP GUIDE RAILS & BRACKETS, (2) S.S. PUMP LIFT CABLES, (1) GALV STEEL H-20 PUMP ACCESS DOOR & FRAME WITH LIFTING SPRINGS, (1) S .S. CORD/CABLE HANGER

------ PLEASE VERIFY VOLTAGE, PHASE & POWER CORD LENGTH------

Performance Curve S4N/S4NS/S4NX

RPM: **1150** Discharge: **4"** Solids: **3"**

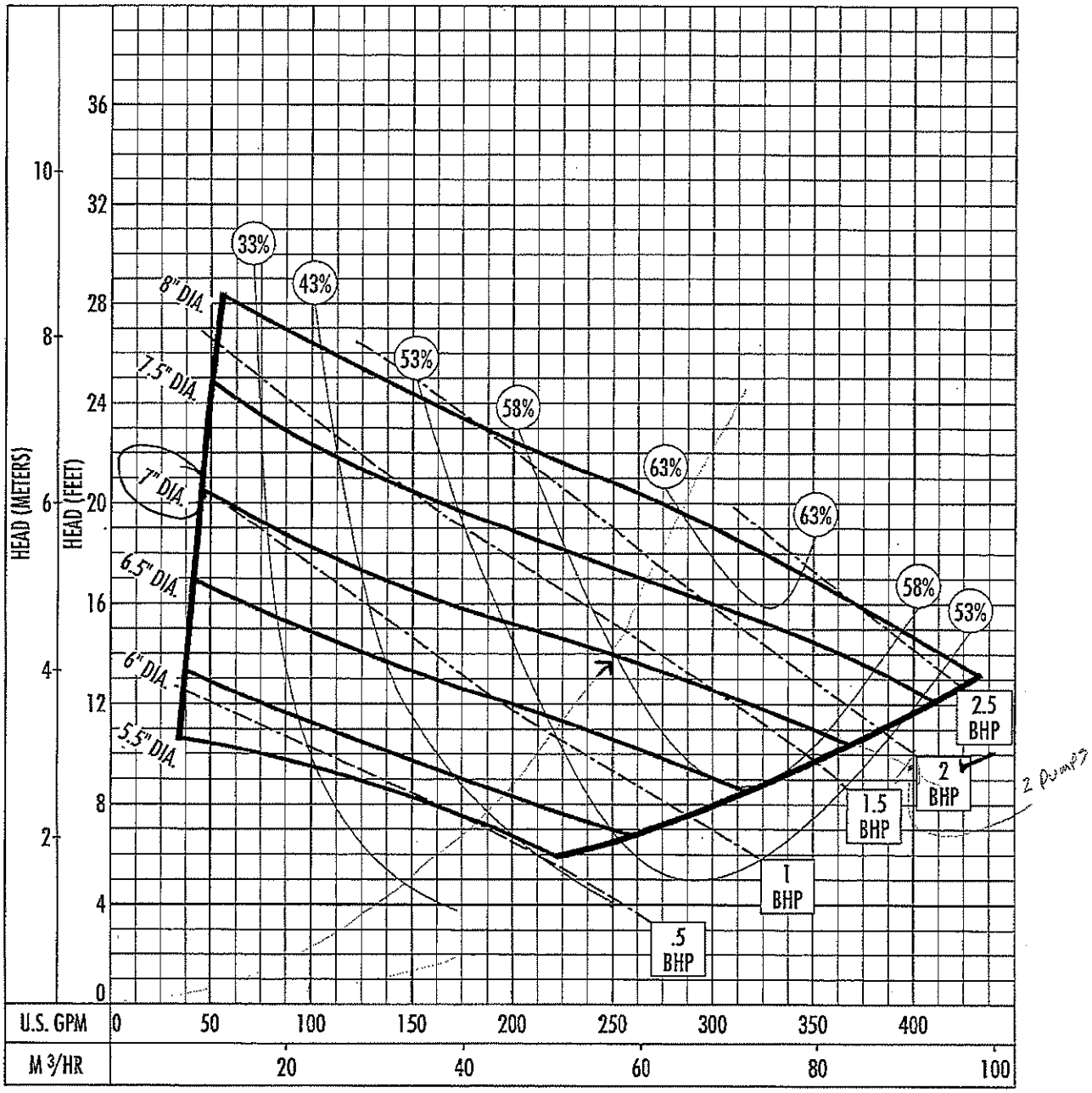

The curves reflect maximum performance characteristics without exceeding full load (Nameplate) horsepower. All pumps have a service factor of 1.2. Operation is recommended in the bounded area with operational point within the curve limit. Performance curves are based on actual tests with clear water at 70° F. and 1280 feet site elevation.

HYDROMATIC®

Conditions of Service:
GPM: 250 TDH: 13.5

Dimensional Data S4N/S4NS/S4NX

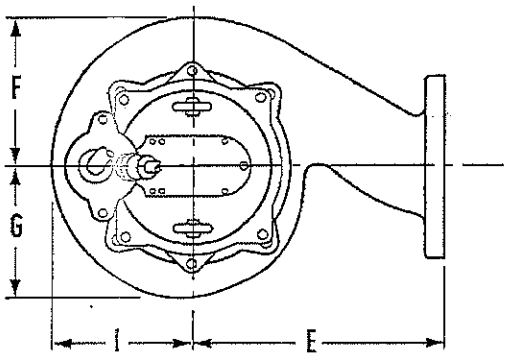

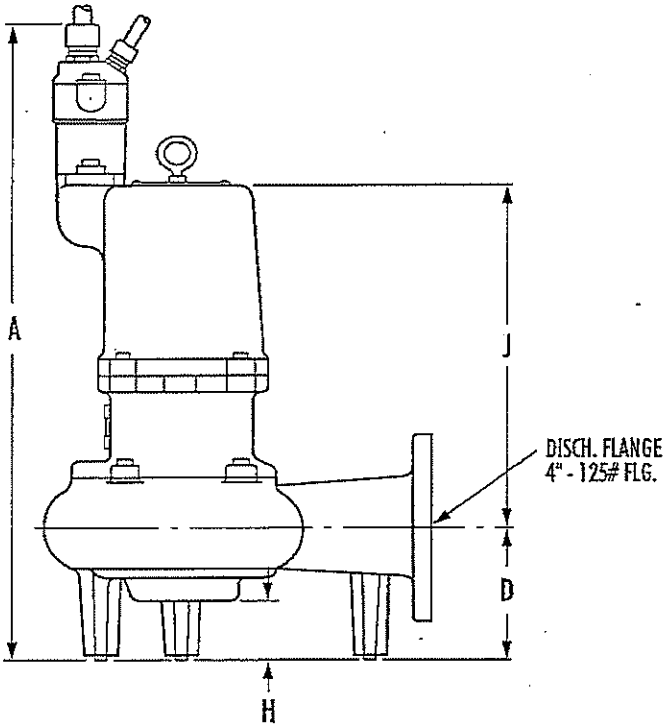

S4NX illustrated above

	A	D	E	F	G	H	I	J
S4N	28-9/16	6-1/2	12-1/2	7-9/16	6-3/8	3-1/8	6-15/16	15-7/16
S4NS	28-9/16	6-1/2	12-1/2	7-9/16	6-3/8	3-1/8	6-15/16	15-7/16
S4NX	31-1/2	6-1/2	12-1/2	7-9/16	6-3/8	3-1/8	6-15/16	16-3/4

ALL DIMENSIONS IN INCHES

NOTE: CASTING DIMENSIONS MAY VARY ± 1/8"

PARSON & SANDERSON, INC.

405 COMMERCE POINT
HARAHAN, LA 70123

DATE: OCT 16, 2008

JOB V1-13 PUMP STATION

ST BERNARD PARISH, LOUISIANA

CONTRACTOR BOH BROTHERS CONST LLC

ENGINEER ALL SOUTH CONSULTING ENGINEERS LLC

SERVICE RAW DOMESTIC SEWERAGE

PUMP DATA: TYPE SUBMERSIBLE NON-CLOG SIZE 4" DISCHARGE

GPM 200 TDH 22 RPM 1150 CURVE PG. 112 IMPEL. DIA. 8.0"

CONSTRUCTION: HYDROMATIC S4MX300EB

- ☐ BRONZE FITTED
- ☐
- ☒ ALL IRON
- ☒ MECHANICAL SEAL
- ☐
- ☐ (DOUBLE) PACKED
- ☐

BASE:

- ☒ CAST IRON
- ☐ CHANNEL STEEL

DRIVE:

- ☐ DIRECT
- ☐ V-BELT
- ☒ CLOSE COUPLED
- ☒ SUBMERSIBLE

SPECIAL REQUIREMENTS: OIL COOLED MOTOR, 35' PUMP, POWER & SENSOR CORDS, S.S. FASTENERS, S.S. PUMP SHAFT, S.S. PUMP SHAFT SLEEVE, PERM. LUBRICATED BALL BEARINGS, MOTOR OVER-TEMP SENSOR, MOISTURE SENSOR, S.S.WEAR RING, EPOXY SEALED CORDS & NON-OVERLOADING EXPLOSION-PROOF MOTOR WITH CLASS "H" INSULATION.

MOTOR DATA

MFR HYDROMATIC HP 3 RPM 1150 FRAME N/A

PHASE 3 CYCLE 60 VOLTS 240 ENCLOSURE X-PROOF

AUXILIARY EQUIPMENT

(2) 4" PUMPS W/35' CORDS, (2) 4" BASE 90° PUMP ELBOWS, (2) 4" PUMP SEAL FLANGES, (4) 2" S.S. PUMP GUIDE RAILS & BRACKETS, (2) S.S. PUMP LIFT CABLES, (1) GALV STEEL H-20 PUMP ACCESS DOOR & FRAME WITH LIFTING SPRINGS, (1) S .S. CORD/CABLE HANGER

------ PLEASE VERIFY VOLTAGE, PHASE & POWER CORD LENGTH------

Performance Curve

S4M/S4MX

RPM: **1150** Discharge: **4"** Solids: **3"**

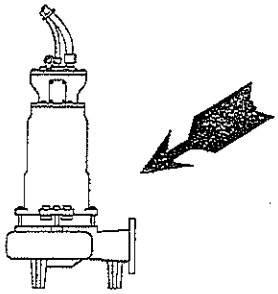

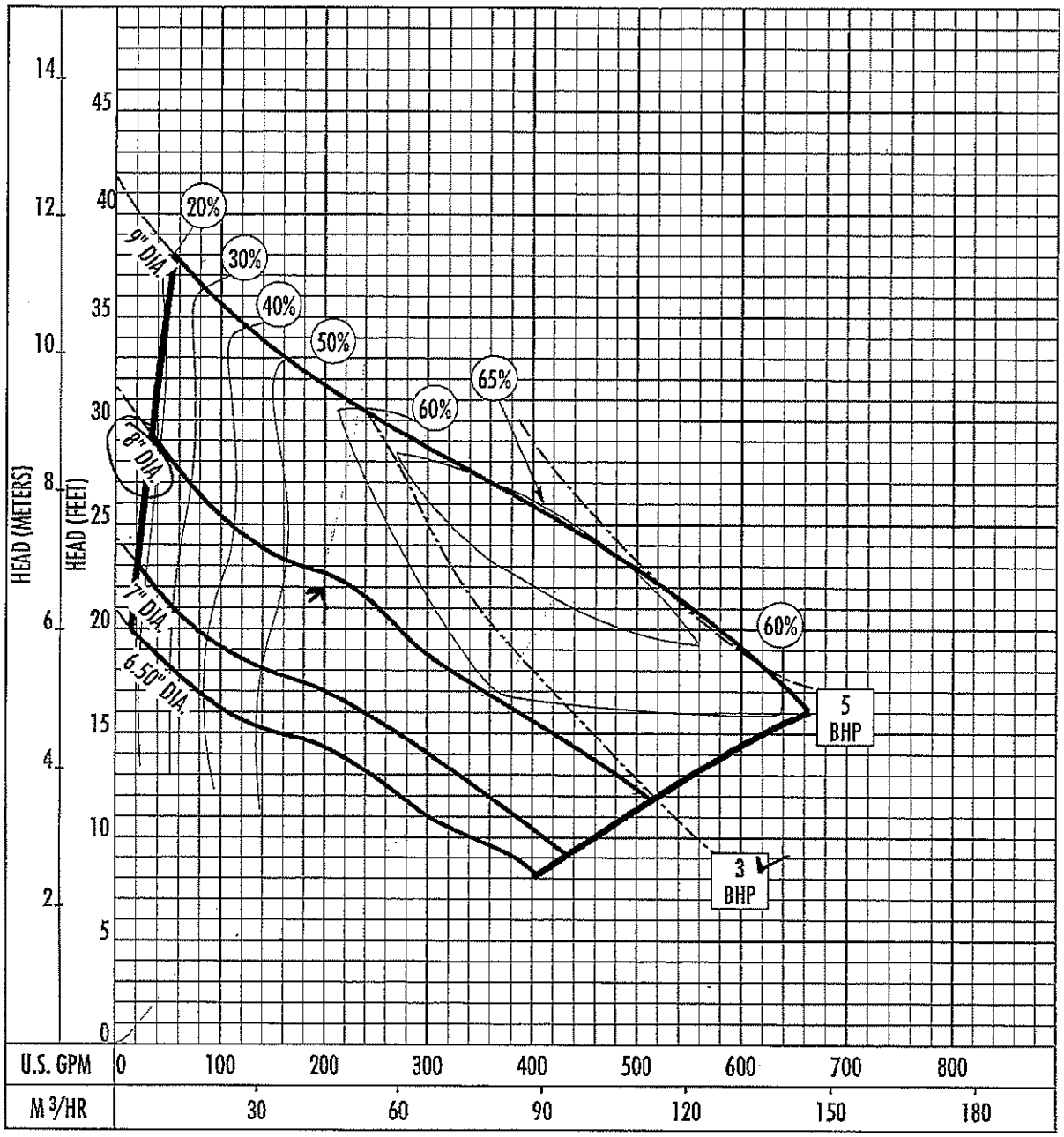

The curves reflect maximum performance characteristics without exceeding full load (Nameplate) horsepower. All pumps have a service factor of 1.2. Operation is recommended in the bounded area with operational point within the curve limit. Performance curves are based on actual tests with clear water at 70° F. and 1280 feet site elevation.

HYDROMATIC®

Conditions of Service:
GPM: 200 TDH: 22

Dimensional Data S4M/S4MX

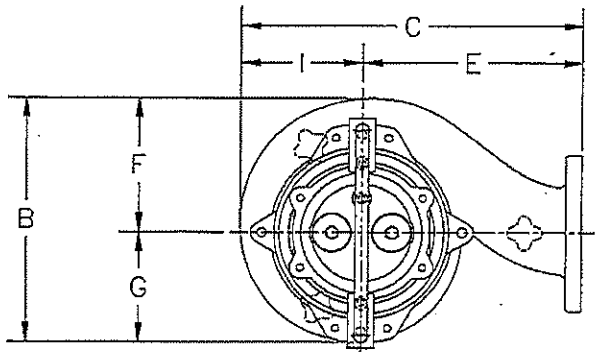

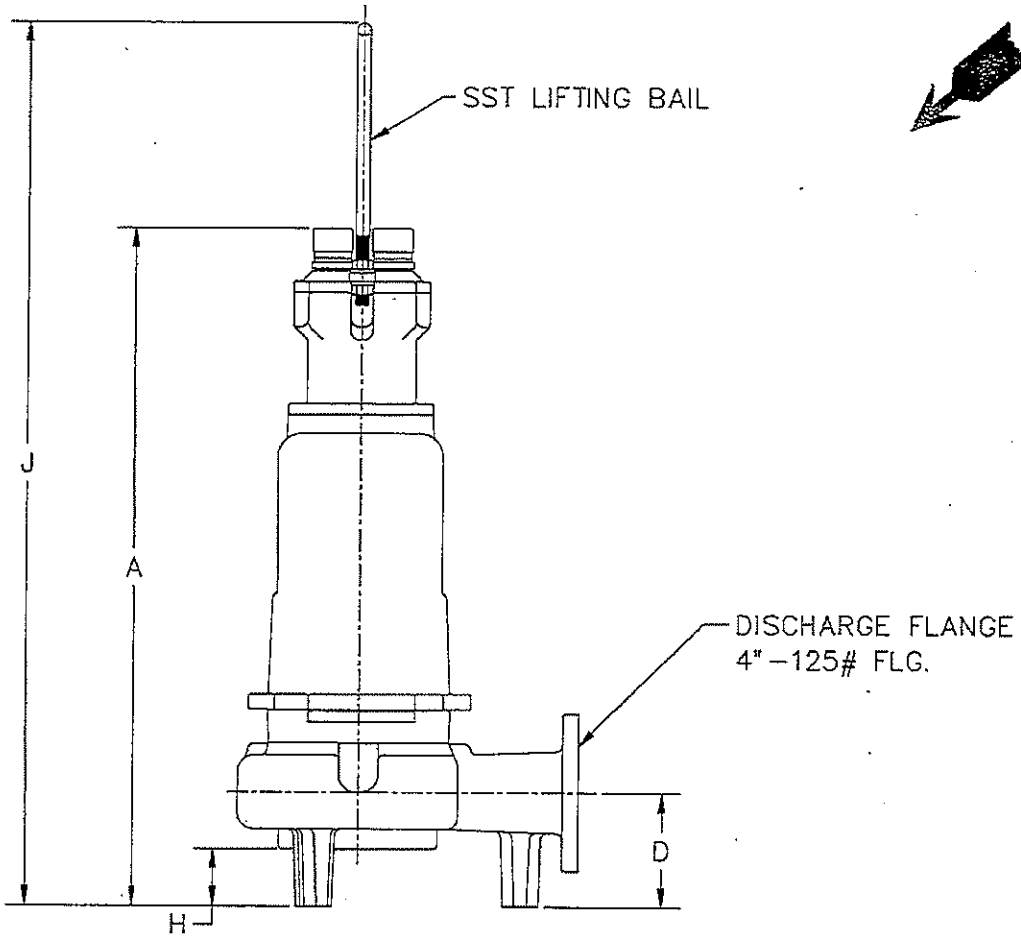

	A	B	C	D	E	F	G	H	I	J
S4M	32–7/8	14–3/16	19–1/2	6–1/2	12–1/2	7–7/8	6–5/16	3–5/16	7	39–1/16
S4MX	38–3/4	14–3/16	19–1/2	6–1/2	12–1/2	7–7/8	6–5/16	3–5/16	7	50–9/16

ALL DIMENSIONS IN INCHES
NOTE: CASTING DIMENSIONS MAY VARY ± 1/8"

PARSON & SANDERSON, INC.

405 COMMERCE POINT
HARAHAN, LA 70123

DATE: OCT 16, 2008

JOB V1-14 PUMP STATION

ST BERNARD PARISH, LOUISIANA

CONTRACTOR BOH BROTHERS CONST LLC

ENGINEER ALL SOUTH CONSULTING ENGINEERS LLC

SERVICE RAW DOMESTIC SEWERAGE

PUMP DATA: TYPE SUBMERSIBLE NON-CLOG SIZE 4" DISCHARGE

GPM 235 TDH 13 RPM 1150 CURVE PG. 110 IMPEL. DIA. 7.0"

CONSTRUCTION: HYDROMATIC S4NX200EB

- ☐ BRONZE FITTED
- ☐
- ☒ ALL IRON
- ☒ MECHANICAL SEAL
- ☐
- ☐ (DOUBLE) PACKED
- ☐

BASE:

- ☒ CAST IRON
- ☐ CHANNEL STEEL

DRIVE:

- ☐ DIRECT
- ☐ V-BELT
- ☒ CLOSE COUPLED
- ☒ SUBMERSIBLE

SPECIAL REQUIREMENTS: OIL COOLED MOTOR, 60' PUMP, POWER & SENSOR CORDS, S.S. FASTENERS, S.S. PUMP SHAFT, S.S. PUMP SHAFT SLEEVE, PERM. LUBRICATED BALL BEARINGS, MOTOR OVER-TEMP SENSOR, MOISTURE SENSOR, S.S.WEAR RING, EPOXY SEALED CORDS & NON-OVERLOADING EXPLOSION-PROOF MOTOR WITH CLASS "H" INSULATION.

MOTOR DATA

MFR HYDROMATIC HP 2 RPM 1150 FRAME N/A

PHASE 3 CYCLE 60 VOLTS 240 ENCLOSURE X-PROOF

AUXILIARY EQUIPMENT

(2) 4" PUMPS W/60' CORDS, (2) 4" BASE 90° PUMP ELBOWS, (2) 4" PUMP SEAL FLANGES, (4) 2" S.S. PUMP GUIDE RAILS & BRACKETS, (2) S.S. PUMP LIFT CABLES, (1) GALV STEEL H-20 PUMP ACCESS DOOR & FRAME WITH LIFTING SPRINGS, (1) S .S. CORD/CABLE HANGER

------ PLEASE VERIFY VOLTAGE, PHASE & POWER CORD LENGTH------

Performance Curve S4N/S4NS/S4NX

RPM: **1150** Discharge: **4"** Solids: **3"**

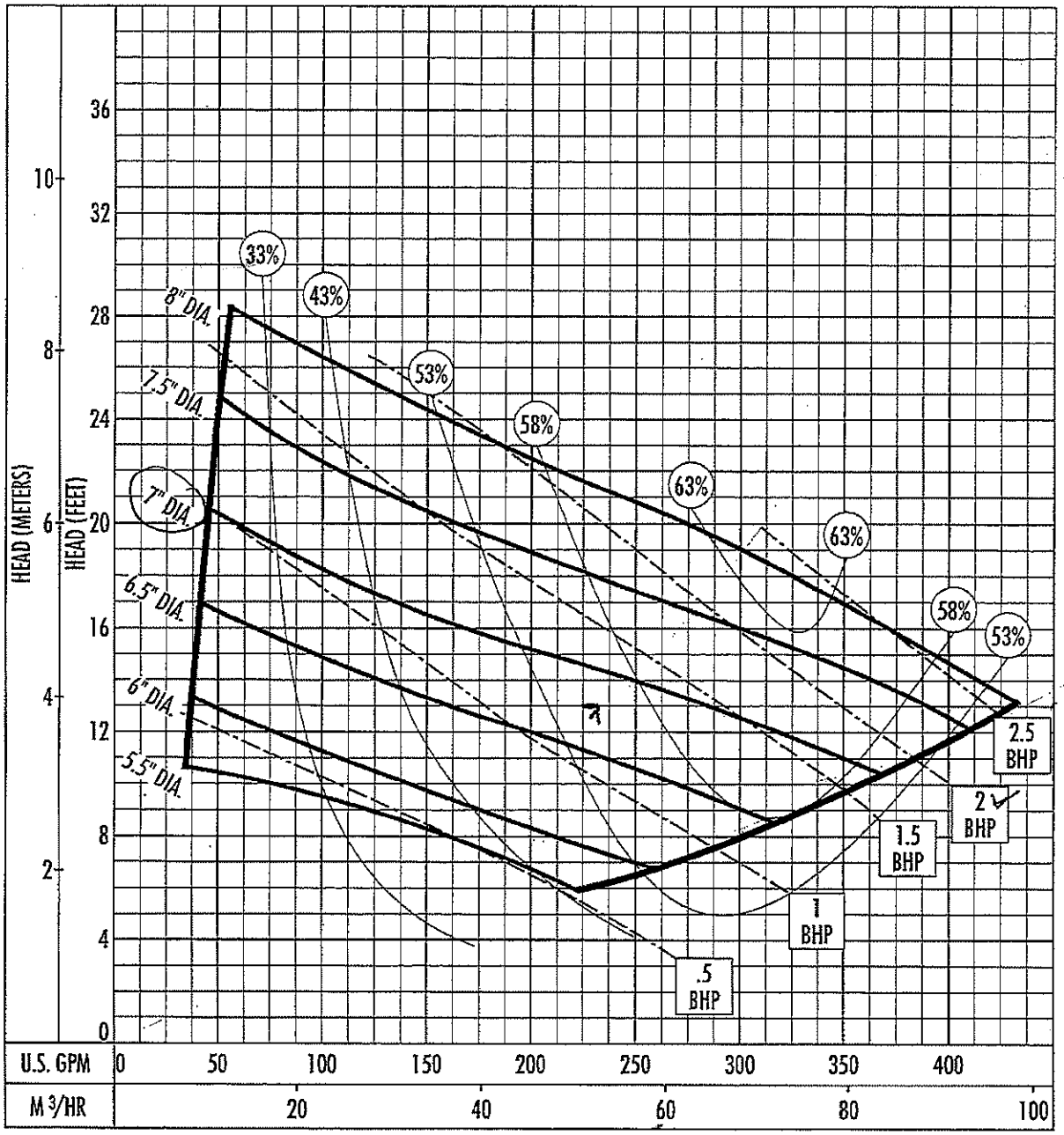

The curves reflect maximum performance characteristics without exceeding full load (Nameplate) horsepower. All pumps have a service factor of 1.2. Operation is recommended in the bounded area with operational point within the curve limit. Performance curves are based on actual tests with clear water at 70° F. and 1280 feet site elevation.

HYDROMATIC®

Conditions of Service:
GPM: 235 TDH: 13

Dimensional Data S4N/S4NS/S4NX

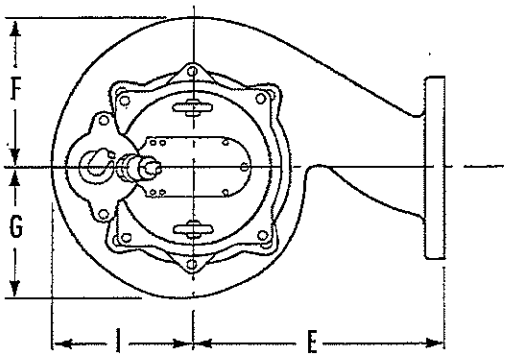

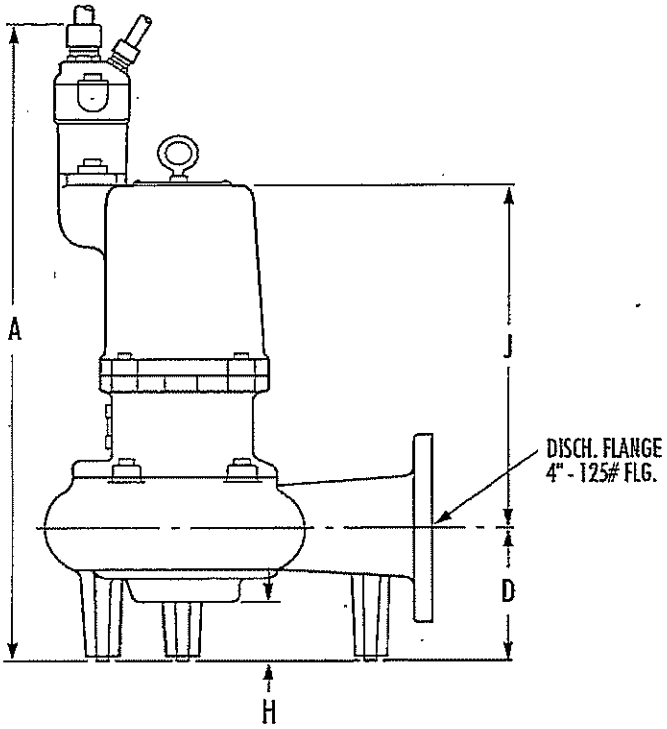

S4NX illustrated above

	A	D	E	F	G	H	I	J
S4N	28-9/16	6-1/2	12-1/2	7-9/16	6-3/8	3-1/8	6-15/16	15-7/16
S4NS	28-9/16	6-1/2	12-1/2	7-9/16	6-3/8	3-1/8	6-15/16	15-7/16
S4NX	31-1/2	6-1/2	12-1/2	7-9/16	6-3/8	3-1/8	6-15/16	16-3/4

ALL DIMENSIONS IN INCHES

NOTE: CASTING DIMENSIONS MAY VARY ± 1/8"

PARSON & SANDERSON, INC.

405 COMMERCE POINT
HARAHAN, LA. 70123

DATE: OCT 16, 2008

JOB V1-15 PUMP STATION

ST BERNARD PARISH, LOUISIANA

CONTRACTOR BOH BROTHERS CONST LLC

ENGINEER ALL SOUTH CONSULTING ENGINEERS LLC

SERVICE RAW DOMESTIC SEWERAGE

PUMP DATA: TYPE SUBMERSIBLE NON-CLOG SIZE 4" DISCHARGE

GPM 275 TDH 12.5 RPM 1150 CURVE PG. 110 IMPEL. DIA. 7.0"

CONSTRUCTION: HYDROMATIC S4NX200EB

- ☐ BRONZE FITTED
- ☐
- ☒ ALL IRON
- ☒ MECHANICAL SEAL
- ☐
- ☐ (DOUBLE) PACKED
- ☐

BASE:

- ☒ CAST IRON
- ☐ CHANNEL STEEL

DRIVE:

- ☐ DIRECT
- ☐ V-BELT
- ☒ CLOSE COUPLED
- ☒ SUBMERSIBLE

SPECIAL REQUIREMENTS: OIL COOLED MOTOR, 60' PUMP, POWER & SENSOR CORDS, S.S. FASTENERS, S.S. PUMP SHAFT, S.S. PUMP SHAFT SLEEVE, PERM. LUBRICATED BALL BEARINGS, MOTOR OVER-TEMP SENSOR, MOISTURE SENSOR, S.S.WEAR RING, EPOXY SEALED CORDS & NON-OVERLOADING EXPLOSION-PROOF MOTOR WITH CLASS "H" INSULATION.

MOTOR DATA

MFR HYDROMATIC HP 2 RPM 1150 FRAME N/A

PHASE 3 CYCLE 60 VOLTS 240 ENCLOSURE X-PROOF

AUXILIARY EQUIPMENT

(2) 4" PUMPS W/60' CORDS, (2) 4" BASE 90° PUMP ELBOWS, (2) 4" PUMP SEAL FLANGES, (4) 2" S.S. PUMP GUIDE RAILS & BRACKETS, (2) S.S. PUMP LIFT CABLES, (1) GALV STEEL H-20 PUMP ACCESS DOOR & FRAME WITH LIFTING SPRINGS, (1) S .S. CORD/CABLE HANGER

------ PLEASE VERIFY VOLTAGE, PHASE & POWER CORD LENGTH------

Performance Curve S4N/S4NS/S4NX

RPM: **1150** Discharge: **4"** Solids: **3"**

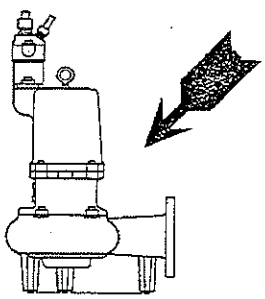

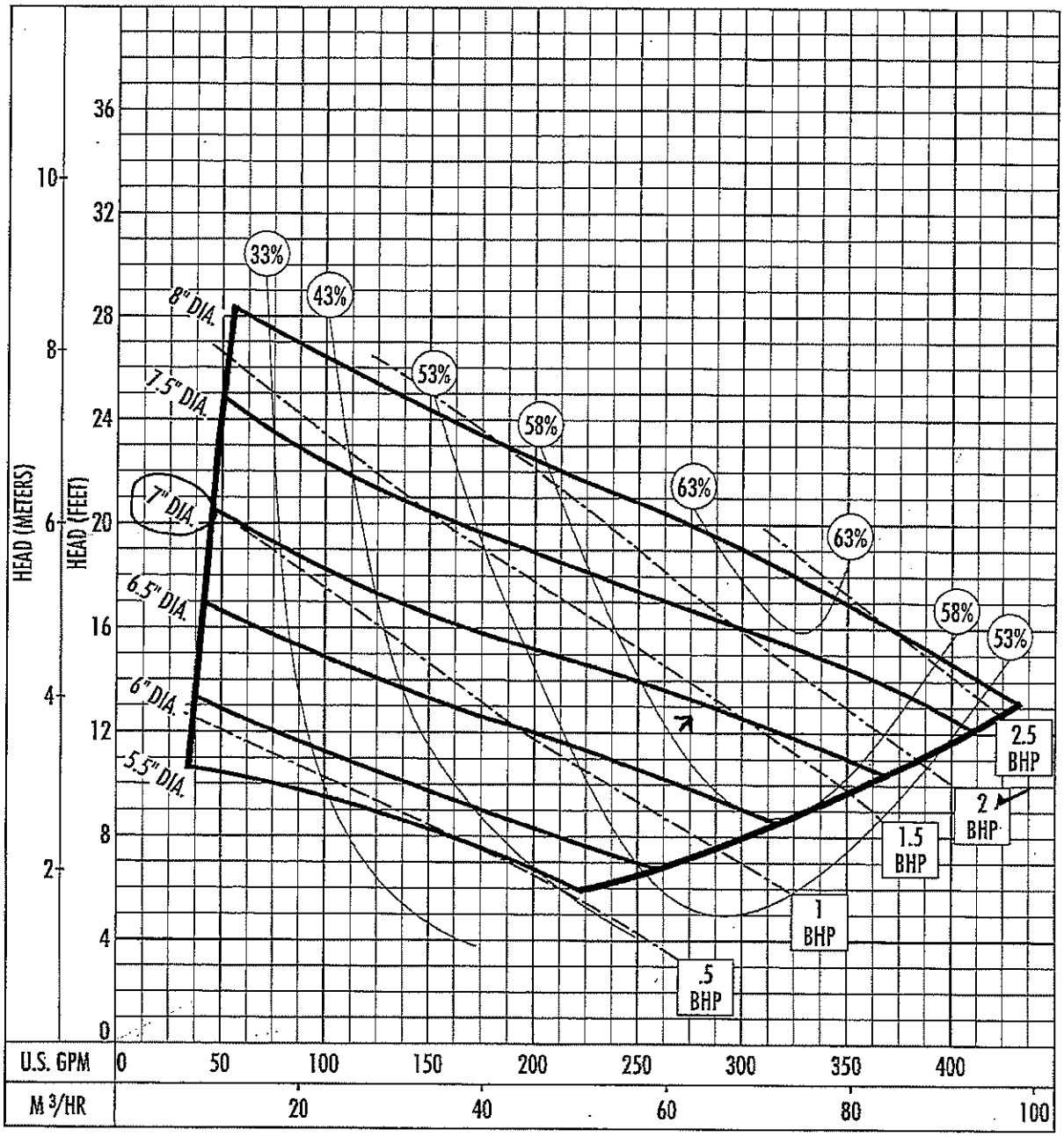

The curves reflect maximum performance characteristics without exceeding full load (Nameplate) horsepower. All pumps have a service factor of 1.2. Operation is recommended in the bounded area with operational point within the curve limit. Performance curves are based on actual tests with clear water at 70° F. and 1280 feet site elevation.

HYDROMATIC®

Conditions of Service:
GPM: 275 TDH: 12.5

Dimensional Data S4N/S4NS/S4NX

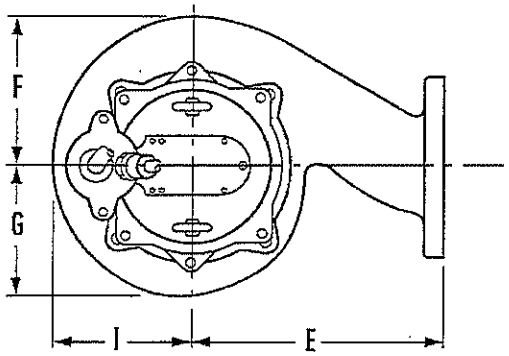

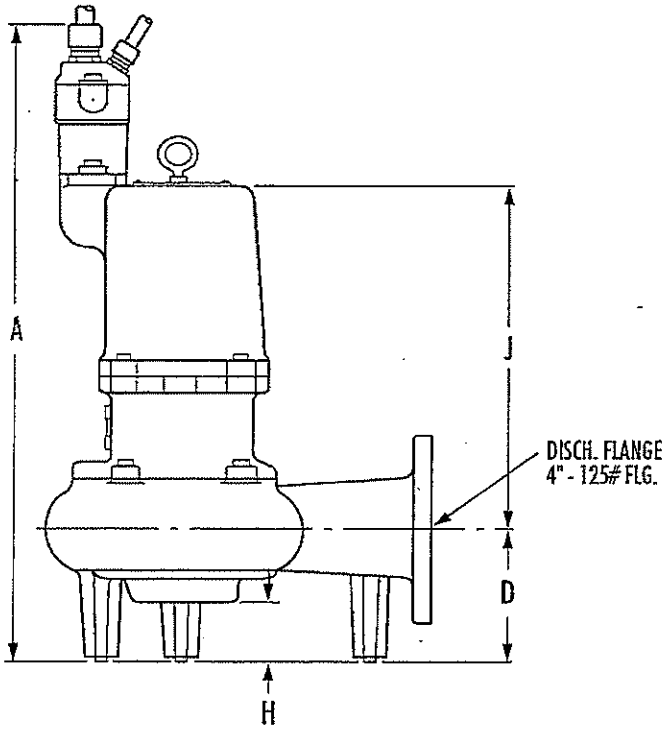

S4NX illustrated above

	A	D	E	F	G	H	I	J
S4N	28-9/16	6-1/2	12-1/2	7-9/16	6-3/8	3-1/8	6-15/16	15-7/16
S4NS	28-9/16	6-1/2	12-1/2	7-9/16	6-3/8	3-1/8	6-15/16	15-7/16
S4NX	31-1/2	6-1/2	12-1/2	7-9/16	6-3/8	3-1/8	6-15/16	16-3/4

ALL DIMENSIONS IN INCHES

NOTE: CASTING DIMENSIONS MAY VARY ± 1/8"

PARSON & SANDERSON, INC.

405 COMMERCE POINT
HARAHAN, LA 70123

DATE: OCT 16, 2008

JOB V1-16 PUMP STATION

ST BERNARD PARISH, LOUISIANA

CONTRACTOR BOH BROTHERS CONST LLC

ENGINEER ALL SOUTH CONSULTING ENGINEERS LLC

SERVICE RAW DOMESTIC SEWERAGE

PUMP DATA: TYPE SUBMERSIBLE NON-CLOG SIZE 4" DISCHARGE

GPM 235 TDH 13 RPM 1150 CURVE PG. 110 IMPEL. DIA. 7.0"

CONSTRUCTION: HYDROMATIC S4NX200EB

- ☐ BRONZE FITTED
- ☐
- ☒ ALL IRON
- ☒ MECHANICAL SEAL
- ☐
- ☐ (DOUBLE) PACKED
- ☐

BASE:

- ☒ CAST IRON
- ☐ CHANNEL STEEL

DRIVE:

- ☐ DIRECT
- ☐ V-BELT
- ☒ CLOSE COUPLED
- ☒ SUBMERSIBLE

SPECIAL REQUIREMENTS: OIL COOLED MOTOR, 35' PUMP, POWER & SENSOR CORDS, S.S. FASTENERS, S.S. PUMP SHAFT, S.S. PUMP SHAFT SLEEVE, PERM. LUBRICATED BALL BEARINGS, MOTOR OVER-TEMP SENSOR, MOISTURE SENSOR, S.S.WEAR RING, EPOXY SEALED CORDS & NON-OVERLOADING EXPLOSION-PROOF MOTOR WITH CLASS "H" INSULATION.

MOTOR DATA

MFR HYDROMATIC HP 2 RPM 1150 FRAME N/A

PHASE 3 CYCLE 60 VOLTS 240 ENCLOSURE X-PROOF

AUXILIARY EQUIPMENT

(2) 4" PUMPS W/35' CORDS, (2) 4" BASE 90° PUMP ELBOWS, (2) 4" PUMP SEAL FLANGES, (4) 2" S.S. PUMP GUIDE RAILS & BRACKETS, (2) S.S. PUMP LIFT CABLES, (1) GALV STEEL H-20 PUMP ACCESS DOOR & FRAME WITH LIFTING SPRINGS, (1) S .S. CORD/CABLE HANGER

------ PLEASE VERIFY VOLTAGE, PHASE & POWER CORD LENGTH------

Performance Curve S4N/S4NS/S4NX

RPM: **1150** Discharge: **4"** Solids: **3"**

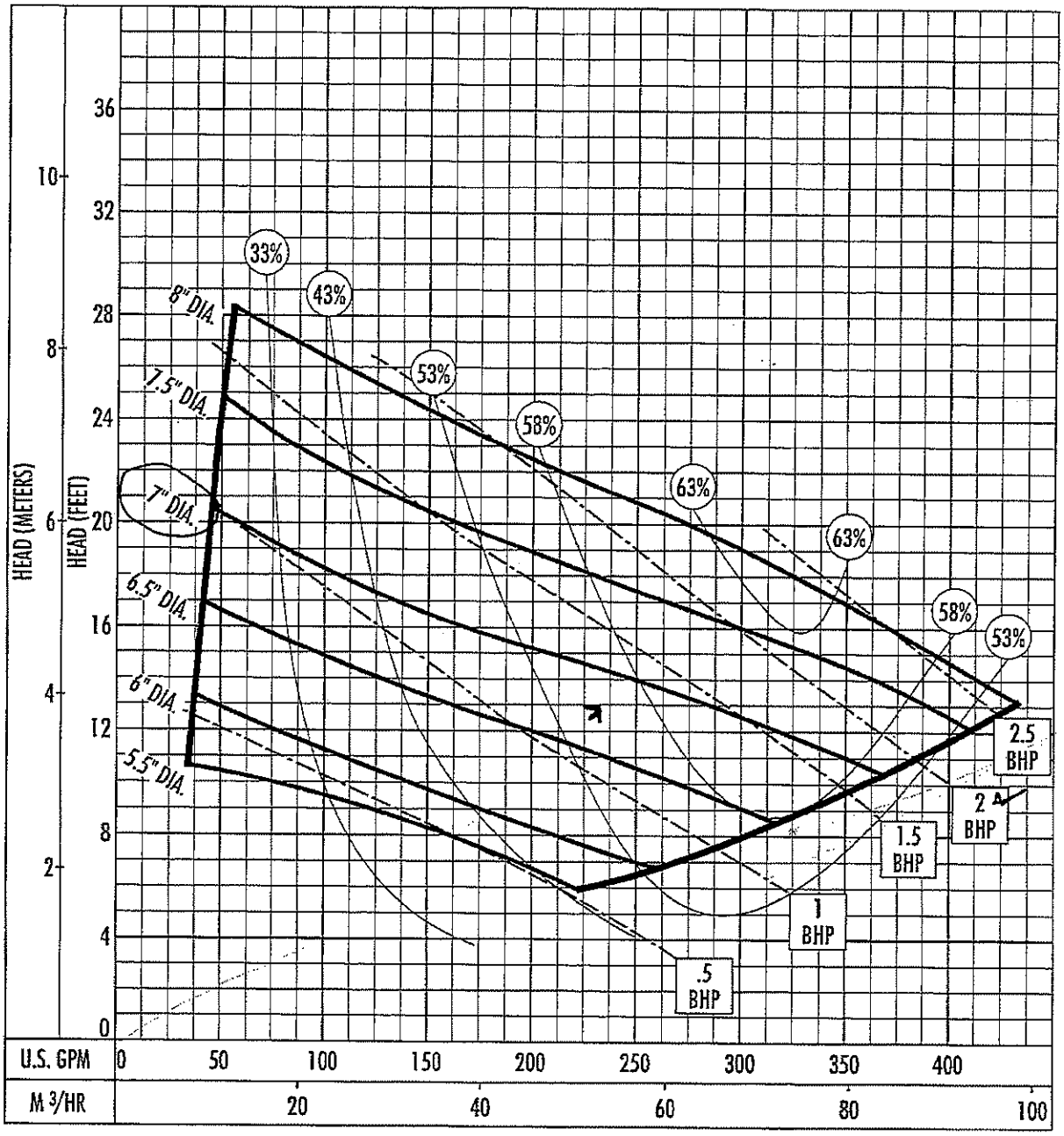

The curves reflect maximum performance characteristics without exceeding full load (Nameplate) horsepower. All pumps have a service factor of 1.2. Operation is recommended in the bounded area with operational point within the curve limit. Performance curves are based on actual tests with clear water at 70° F. and 1280 feet site elevation.

HYDROMATIC®

Conditions of Service:
GPM: 235 TDH: 13

Dimensional Data S4N/S4NS/S4NX

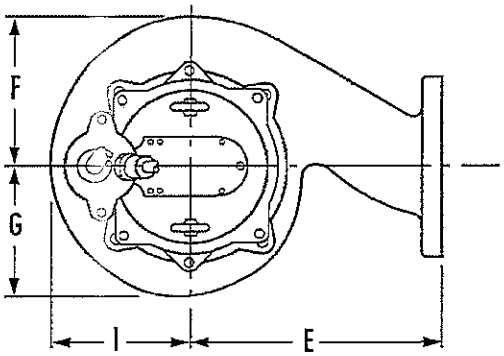

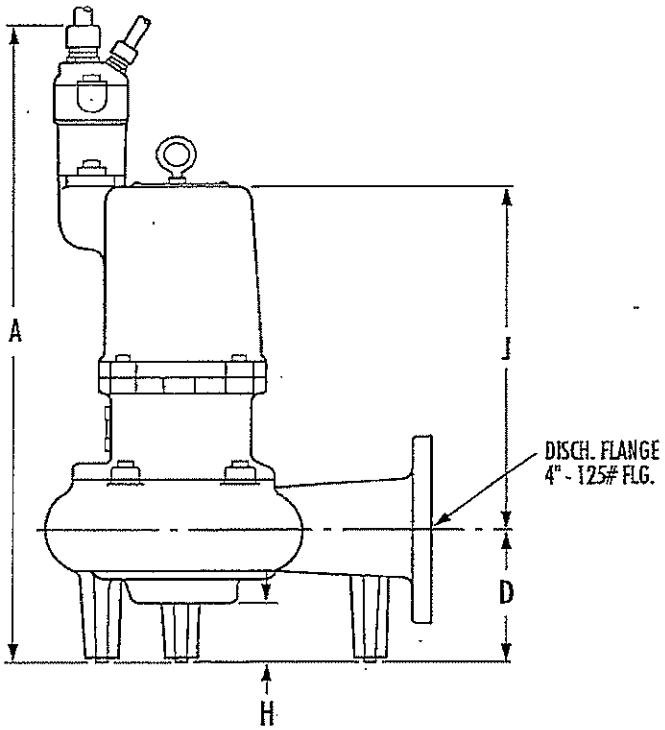

S4NX illustrated above

	A	D	E	F	G	H	I	J
S4N	28-9/16	6-1/2	12-1/2	7-9/16	6-3/8	3-1/8	6-15/16	15-7/16
S4NS	28-9/16	6-1/2	12-1/2	7-9/16	6-3/8	3-1/8	6-15/16	15-7/16
S4NX	31-1/2	6-1/2	12-1/2	7-9/16	6-3/8	3-1/8	6-15/16	16-3/4

ALL DIMENSIONS IN INCHES

NOTE: CASTING DIMENSIONS MAY VARY ± 1/8"

Fairbanks Morse
Pentair Water

Serial Number:	1725778-0
Project Number:	092049
Test Date:	9/18/2008

Certified Pump Performance Curve

Guaranteed Values				
GPM	850			
HEAD	36			
Eff	75			
RPM	1151			

Size-Model	6"	D5433MV	CW
Impeller:	T6C!FW		
Impeller Dia:	10.70"		
Driver:	Job Driver	HP:	15
RPM:	1151	Stages:	ONE

Certified By: John C. Mamie — Test Department
10/08 — Date

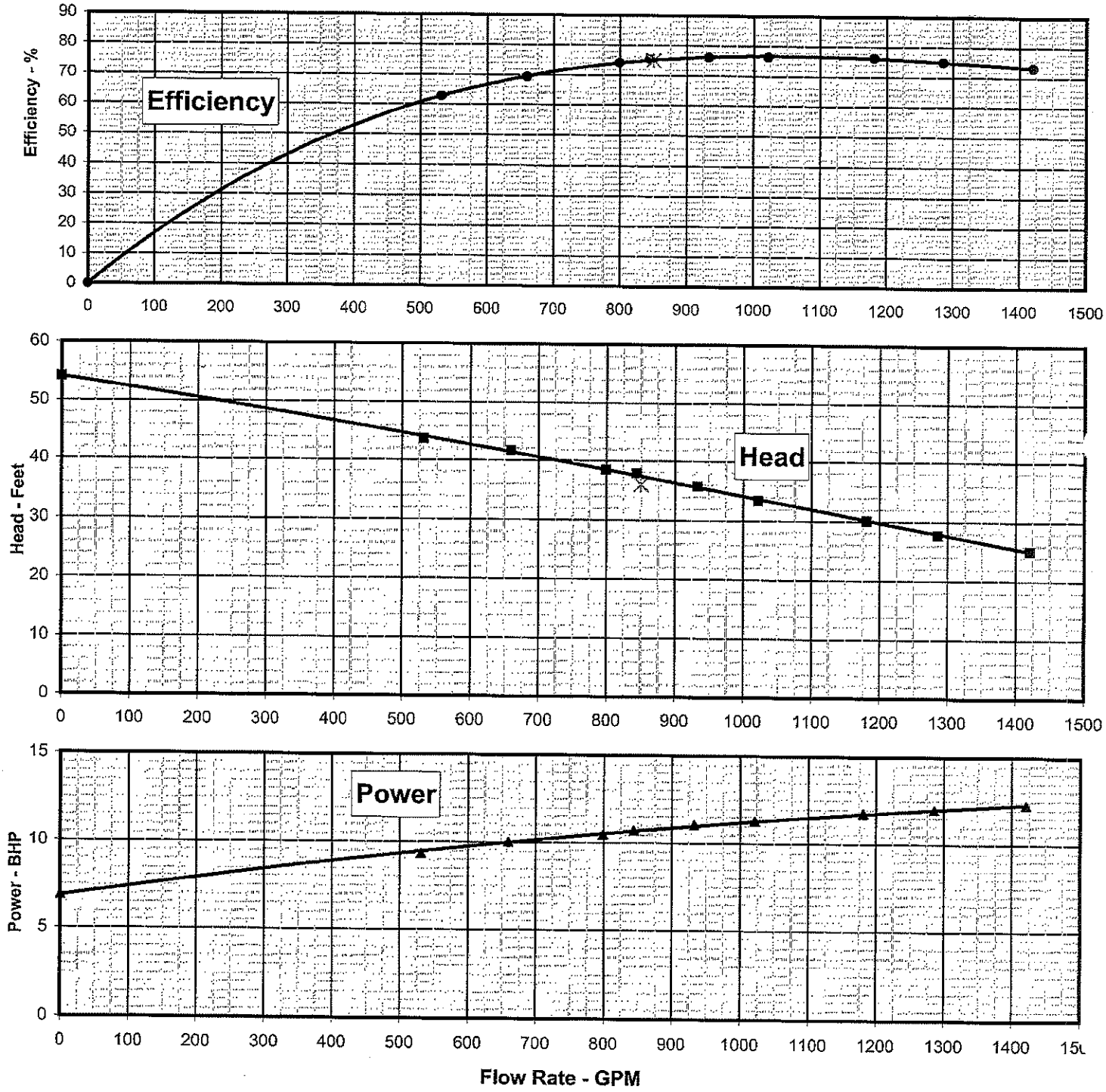

Fairbanks Morse
Pentair Water

Serial Number:	1725778-1
Project Number:	092049
Test Date:	9/18/2008

Certified Pump Performance Curve

Guaranteed Values				
GPM	850			
HEAD	36			
Eff	75			
RPM	1151			

Size-Model	6"	D5433MV	CW
Impeller:	T6CIFW		
Impeller Dia:	10.70		
Driver:	Job Driver	HP:	15
RPM:	1151	Stages:	ONE

Certified By: John C. Marnie — Test Department
10/08 — Date

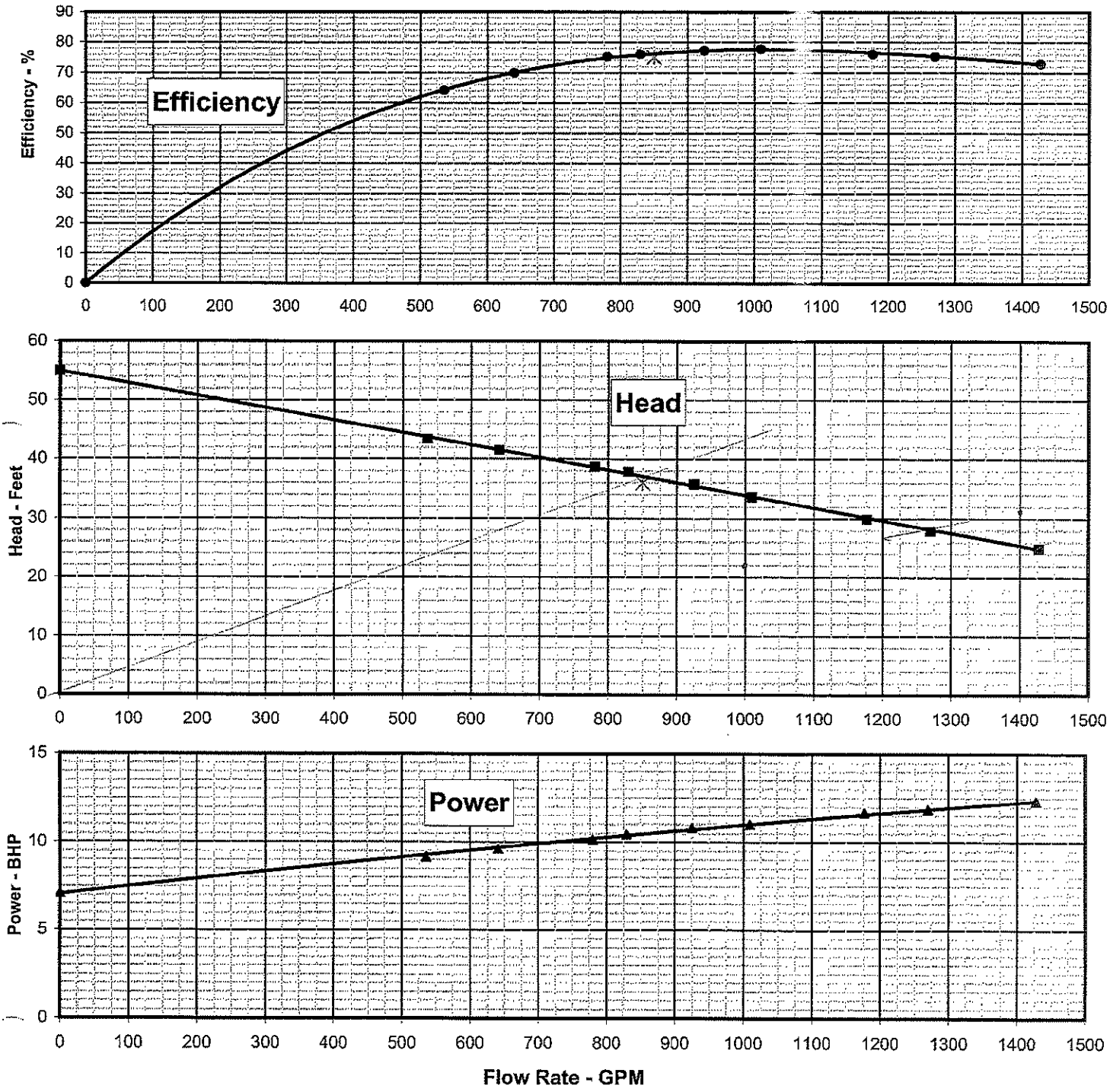

Fairbanks Morse
Pentair Water

Serial Number:	1725811-0
Project Number:	092050
Test Date:	10/28/2008

Certified Pump Performance Curve

Guaranteed Values				
GPM	850			
HEAD	36			
Eff	75			
RPM	1151			

Size-Model	6"	D5433MV	CW
Impeller:	T6C1FW		
Impeller Dia:	10.70"		
Driver:	Job Driver	HP:	15
RPM:	1151	Stages:	ONE

Certified By: John C. Mamie — Test Department
11/08 — Date

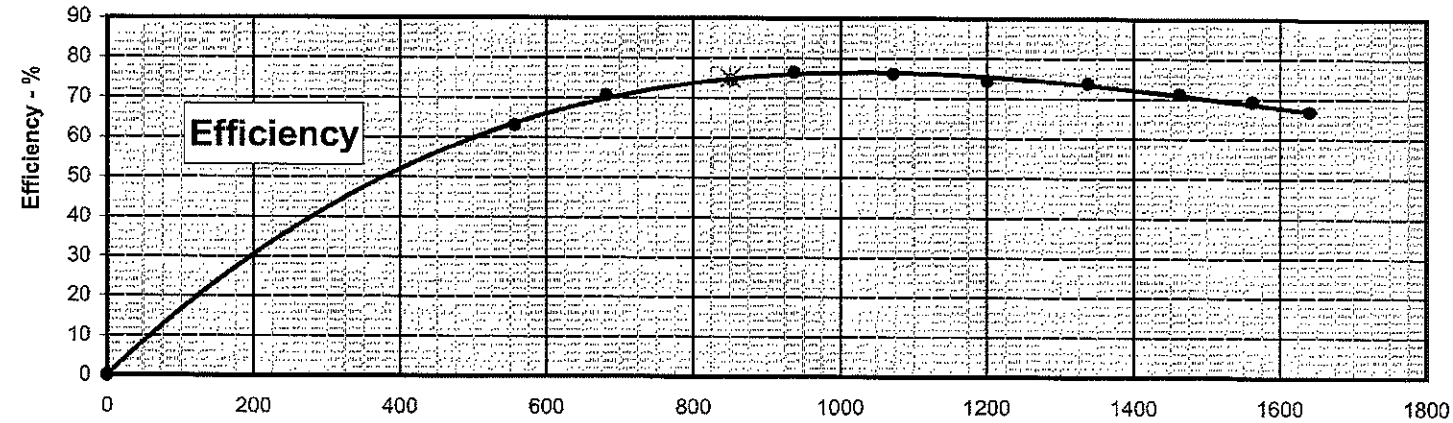

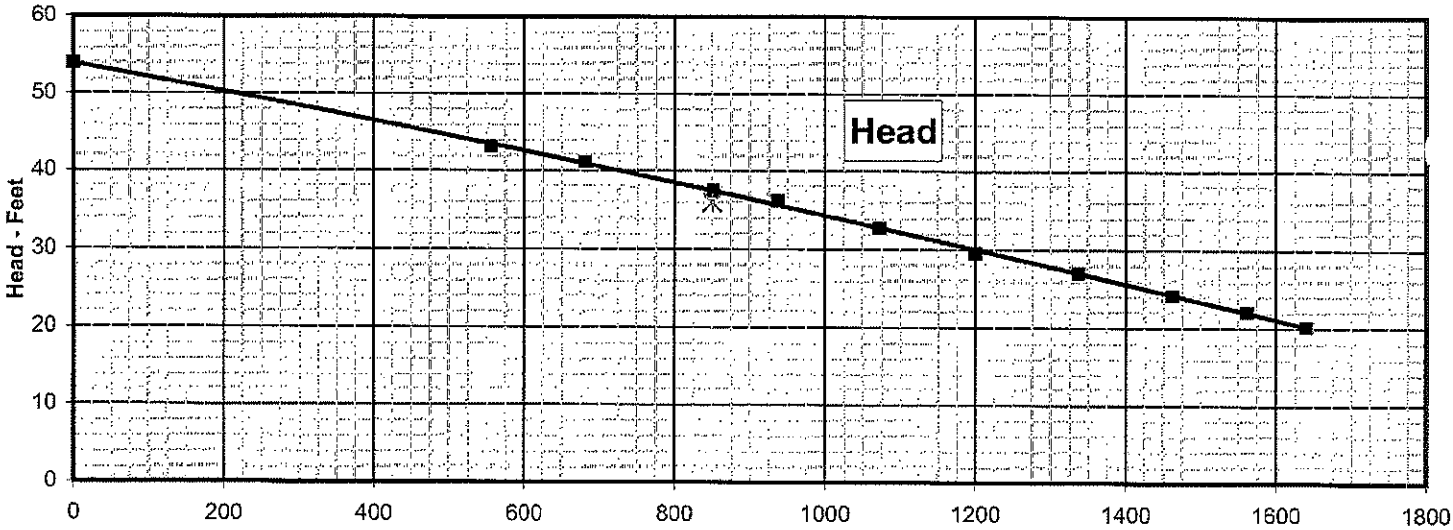

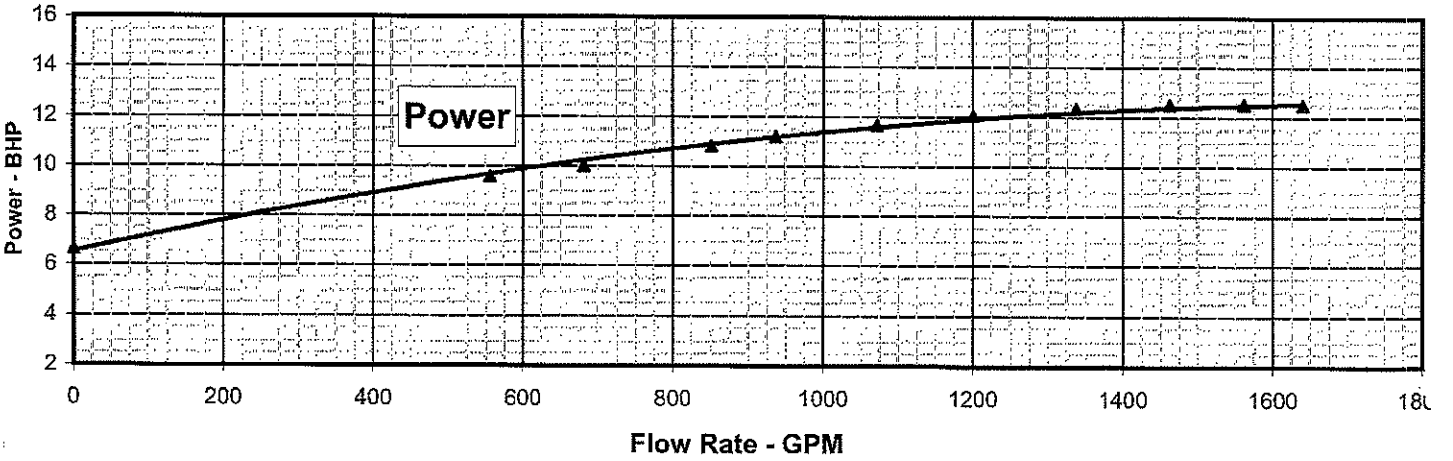

Fairbanks Morse

Pentair Water

.ial Number:	1725811-1
Project Number:	092050
Test Date:	11/5/2008

Certified Pump Performance Curve

Guaranteed Values				
GPM	850			
HEAD	36			
Eff	75			
RPM	1151			

Size-Model	6"	D5433MV	CW
Impeller:	T6C1FW		
Impeller Dia:	10.70"		
Driver:	Job Driver	HP:	15
RPM:	1151	Stages:	ONE

Certified By: John C. Marnie — Test Department

11/08 — Date

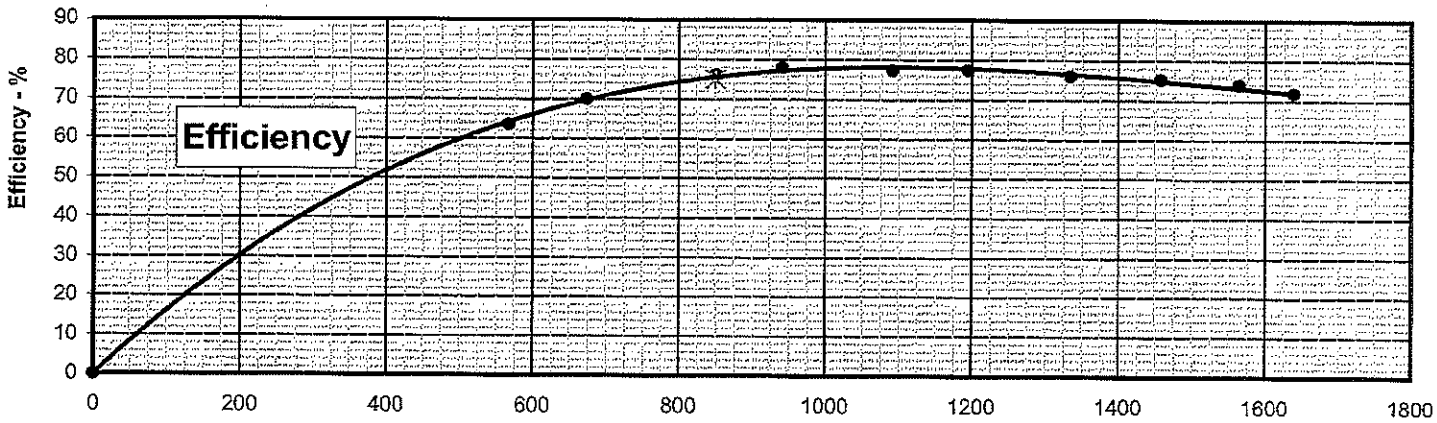

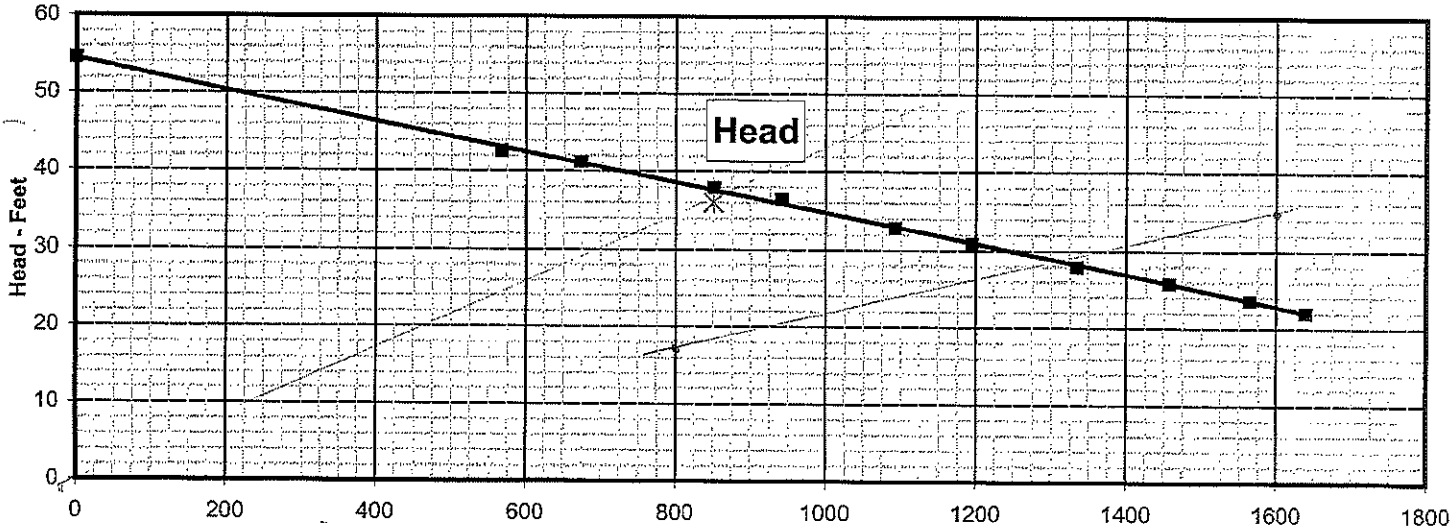

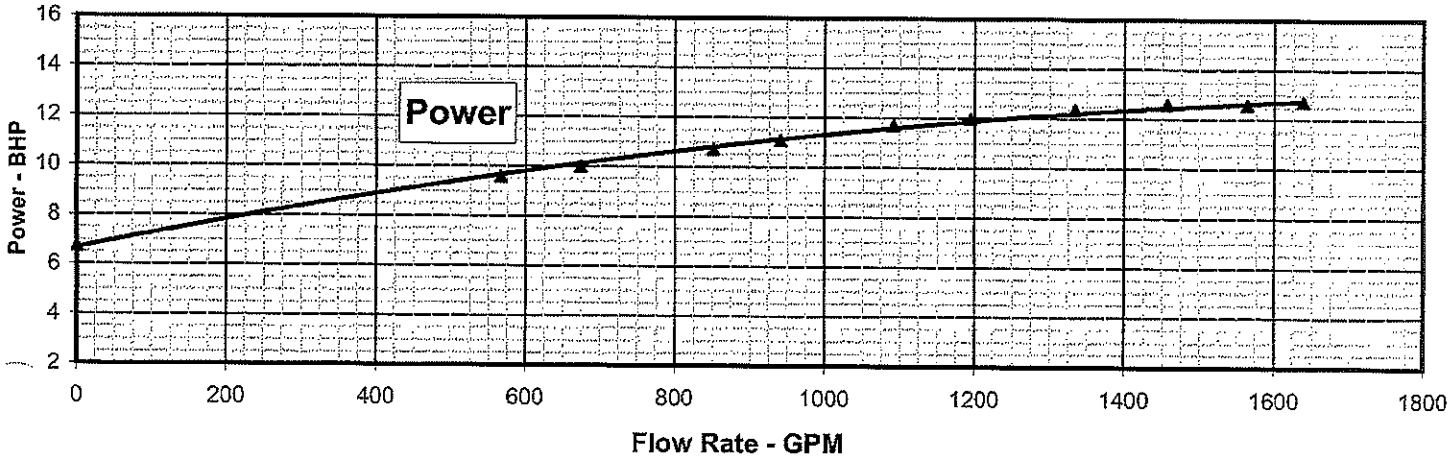

OVERVIEW STATEMENT

Determine the existing flow capacities of gravity mains along E. St. Bernard Highway from station VI-06 to station VI-05. In order to determine the flow capacities for these gravity mains H. Davis Cole & Associates, LLC. (HDCA) decided to use Manning's equation to calculate these flow rate capacities. One of the proposed improvements for the Violet sewer area includes the installment of a new force main connecting VI-06 & VI-05 directly. This will allow HDCA to determine if this new installment is necessary.

REFERENCES

Civil Engineers Reference Manual, Manning's Equation, Eq 19.12(6)

Civil Engineers Reference Manual, Manning's Roughness Coefficient, n, pg. A-36, Appendix 19.A

St. Bernard Parish Government (SBPG) GIS Data

ASSUMPTIONS

(1) HDCA assumed all gravity mains along E. St. Bernard Hwy. were concrete w/ a "n" value of 0.013

(2) The slopes, lengths, diameters and pipe materials given by SBPG were accurate.

(3) Free flow

LIST AND NOTATION OF ALL GRAVITY MAINS ALONG E. ST. BERNARD HWY.
(In order from VI-06 to VI-05) (From SBPG GIS Data)

Conduit ID	Diameter (in.)	Diameter (ft.)
CO-225	8	0.667
CO-224	8	0.667
CO-223	8	0.667
CO-222	8	0.667
CO-221	8	0.667
CO-220	8	0.667
CO-219	8	0.667
CO-216	8	0.667
CO-208	8	0.667
CO-207	8	0.667
CO-206	12	1.000

CALCULATION FOR CO-225

Manning's Equation: $V = \left(\frac{1.49}{n}\right) R_h^{2/3} S^{1/2}$ (Civil Engineer's Reference Manual)

where n = manning's roughness coefficient

R_h = hydraulic radius = $\frac{A}{P}$ where: A = Area (ft.)^2

P = Wetted Perimeter (ft.)

S = Slope of gravity main = $\Delta h / L$

$n = 0.013$ (Civil Engineer's Reference Manual)

$A = \pi r^2 = \frac{\pi}{4}(D)^2 = \frac{\pi(0.667\ ft.)^2}{4} = 0.349\ ft.^2$

$P = \pi D = \pi(0.667\ ft.) = 2.094\ ft.$

$R_h = \frac{0.349\ ft.^2}{2.094\ ft.} = 0.167\ ft.$

Δh = Start Elevation - Stop Elevation = (20.70 - 20.14) ft. = 0.56 ft.

L = length of gravity main = 213.6 ft.

$S = \frac{0.56\ ft.}{213.6\ ft.} = 0.0026$

$V = \frac{1.49}{0.013}(0.167\ ft.)^{2/3}(0.0026)^{1/2}$

$V = 1.77\ ft./s$

$Q = VA = \frac{1.77\ ft.}{s}(0.349\ ft.^2) = 0.62\ ft.^3/s$

(cont'd on Page 3)

Convert Q (cfs) to Q (gpm)

$$\left[Q = \frac{0.62\ ft^3}{s} \left(\frac{448.8\ gal}{ft^3} \right) = 278.26\ gpm \right]$$

The calculation for CO-225 was done for each of the above mentioned gravity mains, and can be found on the attached spreadsheet.

*NOTE: The value above slightly varies from the one found on the spreadsheet due to rounding.

CONCLUSION FROM CALCULATIONS

From the table attached it is apparent that a force main connecting VI-06 to VI-05 is absolutely necessary. The capacities range from 145 gpm to 314 gpm (excluding CO-206) which are well below the pumping capacity of station VI-06, which is 530 gpm (PARSONS; ANDERSON, INC.).

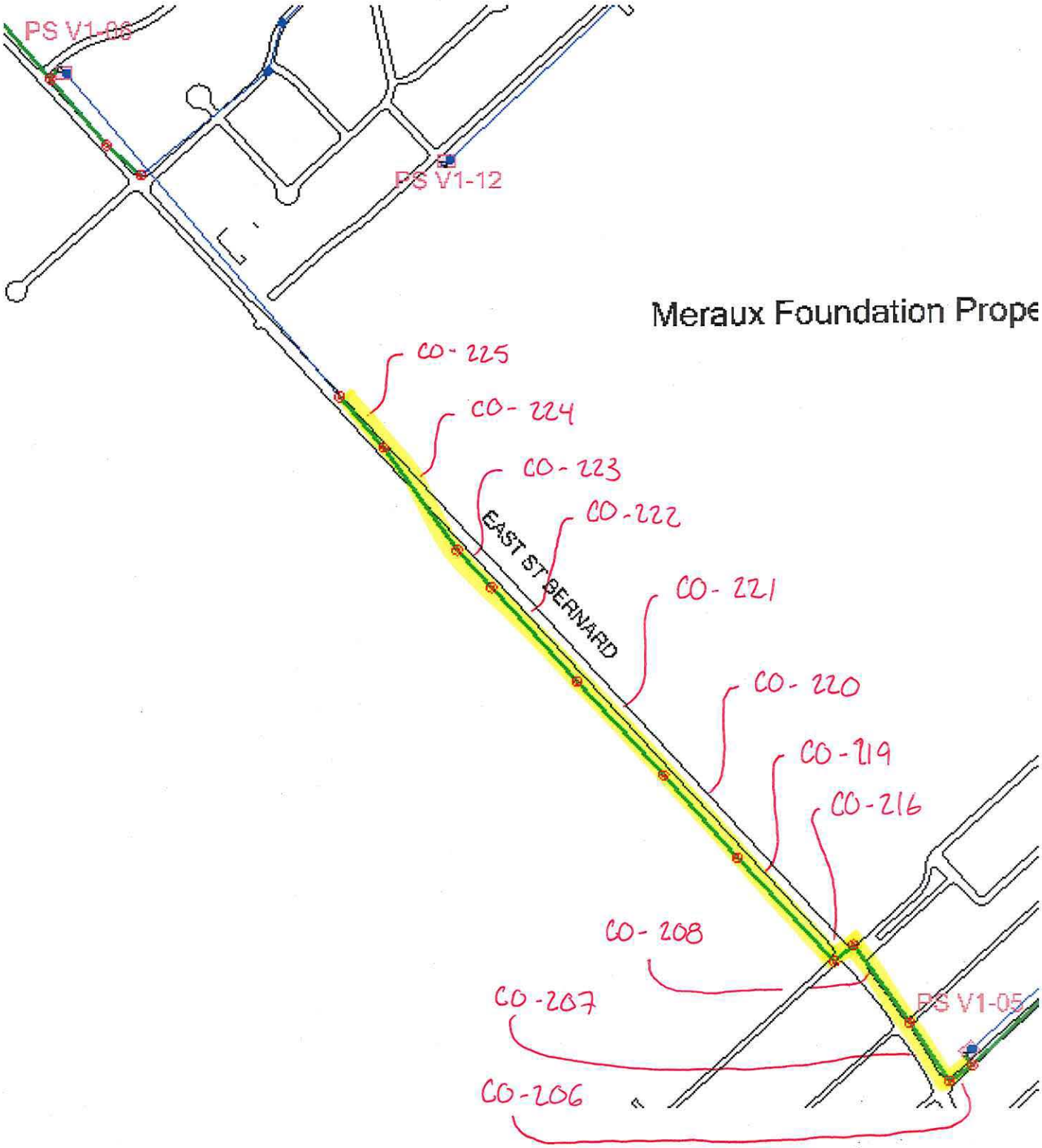
PS V1-06
PS V1-12
Meraux Foundation Prope
CO-225
CO-224
CO-223
CO-222
EAST ST BERNARD
CO-221
CO-220
CO-219
CO-216
CO-208
CO-207
PS V1-05
CO-206

Flow Rate Capacities for Gravity Mains Along E. St. Bernard Hgihway Directly Connecting Lift Station V1-06 to Lift Station V1-05													
Conduit ID	Diameter		Wetted Perimeter	Area	R_h	Elevation			Length	S	V	Q	
						Start	Stop	ΔH					
	(in.)	(ft.)	(ft.)	($ft.^2$)	(ft.)	(ft.)	(ft.)	(ft.)	(ft.)	(ft.)	(ft./s)	(cfs)	(gpm)
CO - 206	12	1.000	3.142	0.785	0.250	13.91	11.89	2.02	88.3	0.0229	6.880	5.403	2424.977
CO - 207	8	0.667	2.094	0.349	0.167	14.57	13.91	0.66	224.2	0.0029	1.883	0.657	295.046
CO - 208	8	0.667	2.094	0.349	0.167	15.44	14.57	0.87	302.9	0.0029	1.860	0.649	291.438
CO - 216	8	0.667	2.094	0.349	0.167	15.56	15.44	0.12	79.7	0.0015	1.347	0.470	211.007
CO - 219	8	0.667	2.094	0.349	0.167	16.84	15.56	1.28	449.5	0.0028	1.852	0.647	290.186
CO - 220	8	0.667	2.094	0.349	0.167	17.09	16.84	0.25	348.1	0.0007	0.930	0.325	145.732
CO - 221	8	0.667	2.094	0.349	0.167	18.43	17.09	1.34	402.8	0.0033	2.002	0.699	313.649
CO - 222	8	0.667	2.094	0.349	0.167	19.06	18.43	0.63	400.9	0.0016	1.376	0.480	215.570
CO - 223	8	0.667	2.094	0.349	0.167	19.53	19.06	0.47	161.9	0.0029	1.870	0.653	292.996
CO - 224	8	0.667	2.094	0.349	0.167	20.14	19.53	0.61	399.3	0.0015	1.357	0.474	212.545
CO - 225	8	0.667	2.094	0.349	0.167	20.70	20.14	0.56	213.6	0.0026	1.777	0.620	278.438

6. GOVERNING EQUATIONS FOR UNIFORM FLOW

Since water is incompressible, the continuity equation is

$$A_1 v_1 = A_2 v_2 \qquad 19.8$$

The most common equation used to calculate the flow velocity in open channels is the 1768 *Chezy equation.*[3]

$$v = C\sqrt{RS} \qquad 19.9$$

Various methods for evaluating the *Chezy coefficient*, C, or "Chezy's C," have been proposed.[4] If the channel is small and very smooth, Chezy's own formula can be used. The friction factor, f, is dependent on the Reynolds number and can be found in the usual manner from the Moody diagram.

$$C = \sqrt{\frac{8g}{f}} \qquad 19.10$$

If the channel is large and the flow is fully turbulent, then the friction loss will not depend so much on the Reynolds number as on the channel roughness. The 1888 Manning formula is frequently used to evaluate the constant C.[5] Notice that the value of C depends only on the channel roughness and geometry. (The conversion constant 1.49 in Eq. 19.11(b) is reported as 1.486 by some authorities. 1.486 is the correct SI-to-English conversion, but it is doubtful whether this equation warrants four significant digits.)

$$C = \left(\frac{1.00}{n}\right) R^{1/6} \qquad \text{[SI]} \qquad 19.11(a)$$

$$C = \left(\frac{1.49}{n}\right) R^{1/6} \qquad \text{[U.S.]} \qquad 19.11(b)$$

n is the *Manning roughness coefficient* (*Manning constant*). Typical values of Manning's n are given in App. 19.A. Judgment is needed in selecting values since tabulated values often differ by as much as 30%. More important to recognize for sewer work is the layer of slime that often coats the sewer walls. Since the slime characteristics can change with location in the sewer, there can be variations in Manning's roughness coefficient along the sewer length.

Independent of these factors, the value of n also depends on the depth of flow, leading to a value (n_{full}) specifically intended for use with full flow. (It is seldom clear from tabulations such as App. 19.A whether the values are for full flow or general use.) The variation in n can be taken into consideration using *Camp's correction*, shown in App. 19.C. However, this degree of sophistication cannot be incorporated into an analysis problem unless a specific value of n is known for a specific depth of flow.

Combining Eqs. 19.9 and 19.11 produces the *Manning equation*, also known as the *Chezy-Manning equation.*

$$v = \left(\frac{1.00}{n}\right) R^{2/3}\sqrt{S} \qquad \text{[SI]} \qquad 19.12(a)$$

$$v = \left(\frac{1.49}{n}\right) R^{2/3}\sqrt{S} \qquad \text{[U.S.]} \qquad 19.12(b)$$

All of the coefficients and constants in the Manning equation may be combined into the *conveyance*, K.

$$Q = vA = \left(\frac{1.00}{n}\right) AR^{2/3}\sqrt{S} = K\sqrt{S} \qquad \text{[SI]} \qquad 19.13(a)$$

$$Q = vA = \left(\frac{1.49}{n}\right) AR^{2/3}\sqrt{S} = K\sqrt{S} \qquad \text{[U.S.]} \qquad 19.13(b)$$

Example 19.1

A rectangular channel on a 0.002 slope is constructed of finished concrete. The channel is 8 ft (2.4 m) wide. Water flows at a depth of 5 ft (1.5 m). What is the flow rate?

SI Solution

The hydraulic radius is

$$R = \frac{A}{P} = \frac{(2.4\text{ m})(1.5\text{ m})}{1.5\text{ m} + 2.4\text{ m} + 1.5\text{ m}} = 0.67\text{ m}$$

From App. 19.A, the roughness coefficient for finished concrete is 0.012. The Manning coefficient is determined by Eq. 19.11(a).

$$C = \left(\frac{1.00}{n}\right) R^{1/6} = \left(\frac{1.00}{0.012}\right)(0.67\text{ m})^{1/6} = 77.9$$

The discharge is

$$Q = vA = C\sqrt{RS}A = \left(77.9\ \frac{\sqrt{\text{m}}}{\text{s}}\right)\left(\sqrt{(0.67\text{ m})(0.002)}\right)(1.5\text{ m})(2.4\text{ m}) = 10.3\text{ m}^3/\text{s}$$

Customary U.S. Solution

The hydraulic radius is

$$R = \frac{A}{P} = \frac{(8\text{ ft})(5\text{ ft})}{5\text{ ft} + 8\text{ ft} + 5\text{ ft}} = 2.22\text{ ft}$$

[3]Pronounced "Shay′-zee." This equation does not appear to be dimensionally consistent. However, the coefficient C is not a pure number. Rather, it has units of (length)$^{1/2}$/time (i.e., (acceleration)$^{1/2}$).

[4]Other methods of evaluating C include the *Kutter equation* (also known as the *G.K. formula*) and the *Bazin formula.* These methods are interesting from a historical viewpoint, but both have been replaced by the Manning equation.

[5]This equation was originally proposed in 1868 by Gaukler and again in 1881 by Hagen, both working independently. For some reason, the Frenchman Flamant attributed the equation to an Irishman, R. Manning. In Europe and many other places, the Manning equation may be known as the *Strickler equation.*

APPENDIX 19.A
Manning's Roughness Coefficient[a,b]
(design use)

channel material	n
plastic (PVC and ABS)	0.009
clean, uncoated cast iron	0.013–0.015
clean, coated cast iron	0.012–0.014
dirty, tuberculated cast iron	0.015–0.035
riveted steel	0.015–0.017
lock-bar and welded steel pipe	0.012–0.013
galvanized iron	0.015–0.017
brass and glass	0.009–0.013
wood stave	
small diameter	0.011–0.012
large diameter	0.012–0.013
concrete	
average value used	0.013
typical commercial, ball and spigot rubber gasketed end connections	
– full (pressurized and wet)	0.010
– partially full	0.0085
with rough joints	0.016–0.017
dry mix, rough forms	0.015–0.016
wet mix, steel forms	0.012–0.014
very smooth, finished	0.011–0.012
vitrified sewer	0.013–0.015
common-clay drainage tile	0.012–0.014
asbestos	0.011
planed timber (flume)	0.012 (0.010–0.014)
canvas	0.012
unplaned timber (flume)	0.013 (0.011–0.015)
brick	0.016
rubble masonry	0.017
smooth earth	0.018
firm gravel	0.023
corrugated metal pipe (CMP)	0.024 (see App. 17.F)
natural channels, good condition	0.025
rip rap	0.035
natural channels with stones and weeds	0.035
very poor natural channels	0.060

[a]Compiled from various sources.
[b]Values outside these ranges have been observed, but these values are typical.

ID	4257
Label	CO-225
Notes	
GIS-IDs	<Collection: 0 items>
Hyperlinks	<Collection: 0 items>
Node Reversal	<Reverse Start/Stop>
Start Node	V08-0450
Stop Node	V08-0448
<Geometry>	
Active Topology	
Headlosses	
Infiltration	
Output	
Physical	
Conduit Type	User Defined Conduit
Section Type	Circle
Material	<None>
Diameter (in)	8.0
Number of Barrels	1
Roughness Type	Single Roughness
Manning's n	0.013
Use Local Conduit Description?	False
Conduit Description	Circle - 8.0 in
Set Invert to Start?	True
Invert (Start) (ft)	20.70
Set Invert to Stop?	True
Invert (Stop) (ft)	20.14
Has User Defined Length?	False
Length (Scaled) (ft)	213.6
Length (Unified) (ft)	213.6
Slope (Calculated) (ft/ft)	0.003

ID	4256
Label	CO-224
Notes	
GIS-IDs	<Collection: 0 items>
Hyperlinks	<Collection: 0 items>
Node Reversal	<Reverse Start/Stop>
Start Node	V08-0448
Stop Node	V08-0446
<Geometry>	
Active Topology	
Headlosses	
Infiltration	
Output	
Physical	
Conduit Type	User Defined Conduit
Section Type	Circle
Material	<None>
Diameter (in)	8.0
Number of Barrels	1
Roughness Type	Single Roughness
Manning's n	0.013
Use Local Conduit Description?	False
Conduit Description	Circle - 8.0 in
Set Invert to Start?	True
Invert (Start) (ft)	20.14
Set Invert to Stop?	True
Invert (Stop) (ft)	19.53
Has User Defined Length?	False
Length (Scaled) (ft)	399.3
Length (Unified) (ft)	399.3
Slope (Calculated) (ft/ft)	0.002

ID	4255
Label	CO-223
Notes	
GIS-IDs	<Collection: 0 items>
Hyperlinks	<Collection: 0 items>
Node Reversal	<Reverse Start/Stop>
Start Node	V08-0446
Stop Node	V08-0444
<Geometry>	
Active Topology	
Headlosses	
Infiltration	
Output	
Physical	
Conduit Type	User Defined Conduit
Section Type	Circle
Material	<None>
Diameter (in)	8.0
Number of Barrels	1
Roughness Type	Single Roughness
Manning's n	0.013
Use Local Conduit Description?	False
Conduit Description	Circle - 8.0 in
Set Invert to Start?	True
Invert (Start) (ft)	19.53
Set Invert to Stop?	True
Invert (Stop) (ft)	19.06
Has User Defined Length?	False
Length (Scaled) (ft)	161.9
Length (Unified) (ft)	161.9
Slope (Calculated) (ft/ft)	0.003

ID	4254
Label	CO-222
Notes	
GIS-IDs	<Collection: 0 items>
Hyperlinks	<Collection: 0 items>
Node Reversal	<Reverse Start/Stop>
Start Node	V08-0444
Stop Node	V08-0442
<Geometry>	
Active Topology	
Headlosses	
Infiltration	
Output	
Physical	
Conduit Type	User Defined Conduit
Section Type	Circle
Material	<None>
Diameter (in)	8.0
Number of Barrels	1
Roughness Type	Single Roughness
Manning's n	0.013
Use Local Conduit Description?	False
Conduit Description	Circle - 8.0 in
Set Invert to Start?	True
Invert (Start) (ft)	19.06
Set Invert to Stop?	True
Invert (Stop) (ft)	18.43
Has User Defined Length?	False
Length (Scaled) (ft)	400.9
Length (Unified) (ft)	400.9
Slope (Calculated) (ft/ft)	0.002

ID	4253
Label	CO-221
Notes	
GIS-IDs	<Collection: 0 items>
Hyperlinks	<Collection: 0 items>
Node Reversal	<Reverse Start/Stop>
Start Node	V08-0442
Stop Node	V08-0440
<Geometry>	
Active Topology	
Headlosses	
Infiltration	
Output	
Physical	
Conduit Type	User Defined Conduit
Section Type	Circle
Material	<None>
Diameter (in)	8.0
Number of Barrels	1
Roughness Type	Single Roughness
Manning's n	0.013
Use Local Conduit Description?	False
Conduit Description	Circle - 8.0 in
Set Invert to Start?	True
Invert (Start) (ft)	18.43
Set Invert to Stop?	True
Invert (Stop) (ft)	17.09
Has User Defined Length?	False
Length (Scaled) (ft)	402.8
Length (Unified) (ft)	402.8
Slope (Calculated) (ft/ft)	0.003

ID	4252
Label	CO-220
Notes	
GIS-IDs	<Collection: 0 items>
Hyperlinks	<Collection: 0 items>
Node Reversal	<Reverse Start/Stop>
Start Node	V08-0440
Stop Node	V08-0438
<Geometry>	
Active Topology	
Headlosses	
Infiltration	
Output	
Physical	
Conduit Type	User Defined Conduit
Section Type	Circle
Material	<None>
Diameter (in)	8.0
Number of Barrels	1
Roughness Type	Single Roughness
Manning's n	0.013
Use Local Conduit Description?	False
Conduit Description	Circle - 8.0 in
Set Invert to Start?	True
Invert (Start) (ft)	17.09
Set Invert to Stop?	True
Invert (Stop) (ft)	16.84
Has User Defined Length?	False
Length (Scaled) (ft)	348.1
Length (Unified) (ft)	348.1
Slope (Calculated) (ft/ft)	0.001

ID	4251
Label	CO-219
Notes	
GIS-IDs	<Collection: 0 items>
Hyperlinks	<Collection: 0 items>
Node Reversal	<Reverse Start/Stop>
Start Node	V08-0438
Stop Node	V08-0432
<Geometry>	
Active Topology	
Headlosses	
Infiltration	
Output	
Physical	
Conduit Type	User Defined Conduit
Section Type	Circle
Material	<None>
Diameter (in)	8.0
Number of Barrels	1
Roughness Type	Single Roughness
Manning's n	0.013
Use Local Conduit Description?	False
Conduit Description	Circle - 8.0 in
Set Invert to Start?	True
Invert (Start) (ft)	16.84
Set Invert to Stop?	True
Invert (Stop) (ft)	15.56
Has User Defined Length?	False
Length (Scaled) (ft)	449.5
Length (Unified) (ft)	449.5
Slope (Calculated) (ft/ft)	0.003

ID	4248
Label	CO-216
Notes	
GIS-IDs	<Collection: 0 items>
Hyperlinks	<Collection: 0 items>
Node Reversal	<Reverse Start/Stop>
Start Node	V08-0432
Stop Node	V08-0416
<Geometry>	
Active Topology	
Headlosses	
Infiltration	
Output	
Physical	
Conduit Type	User Defined Conduit
Section Type	Circle
Material	<None>
Diameter (in)	8.0
Number of Barrels	1
Roughness Type	Single Roughness
Manning's n	0.013
Use Local Conduit Description?	False
Conduit Description	Circle - 8.0 in
Set Invert to Start?	True
Invert (Start) (ft)	15.56
Set Invert to Stop?	True
Invert (Stop) (ft)	15.44
Has User Defined Length?	False
Length (Scaled) (ft)	79.7
Length (Unified) (ft)	79.7
Slope (Calculated) (ft/ft)	0.002

ID	4240
Label	CO-208
Notes	
GIS-IDs	<Collection: 0 items>
Hyperlinks	<Collection: 0 items>
Node Reversal	<Reverse Start/Stop>
Start Node	V08-0416
Stop Node	V08-0414
<Geometry>	
Active Topology	
Headlosses	
Infiltration	
Output	
Physical	
Conduit Type	User Defined Conduit
Section Type	Circle
Material	<None>
Diameter (in)	8.0
Number of Barrels	1
Roughness Type	Single Roughness
Manning's n	0.013
Use Local Conduit Description?	False
Conduit Description	Circle - 8.0 in
Set Invert to Start?	True
Invert (Start) (ft)	15.44
Set Invert to Stop?	True
Invert (Stop) (ft)	14.57
Has User Defined Length?	False
Length (Scaled) (ft)	302.9
Length (Unified) (ft)	302.9
Slope (Calculated) (ft/ft)	0.003

ID	4239
Label	CO-207
Notes	
GIS-IDs	<Collection: 0 items>
Hyperlinks	<Collection: 0 items>
Node Reversal	<Reverse Start/Stop>
Start Node	V08-0414
Stop Node	V08-0412
<Geometry>	
Active Topology	
Headlosses	
Infiltration	
Output	
Physical	
Conduit Type	User Defined Conduit
Section Type	Circle
Material	<None>
Diameter (in)	8.0
Number of Barrels	1
Roughness Type	Single Roughness
Manning's n	0.013
Use Local Conduit Description?	False
Conduit Description	Circle - 8.0 in
Set Invert to Start?	True
Invert (Start) (ft)	14.57
Set Invert to Stop?	True
Invert (Stop) (ft)	13.91
Has User Defined Length?	False
Length (Scaled) (ft)	224.2
Length (Unified) (ft)	224.2
Slope (Calculated) (ft/ft)	0.003

ID	4238
Label	CO-206
Notes	
GIS-IDs	<Collection: 0 items>
Hyperlinks	<Collection: 0 items>
Node Reversal	<Reverse Start/Stop>
Start Node	V08-0412
Stop Node	V08-0410
<Geometry>	
Active Topology	
Headlosses	
Infiltration	
Output	
Physical	
Conduit Type	User Defined Conduit
Section Type	Circle
Material	<None>
Diameter (in)	12.0
Number of Barrels	1
Roughness Type	Single Roughness
Manning's n	0.013
Use Local Conduit Description?	False
Conduit Description	Circle - 12.0 in
Set Invert to Start?	True
Invert (Start) (ft)	13.91
Set Invert to Stop?	True
Invert (Stop) (ft)	11.89
Has User Defined Length?	False
Length (Scaled) (ft)	88.3
Length (Unified) (ft)	88.3
Slope (Calculated) (ft/ft)	0.023

OVERVIEW STATEMENT

Determine the anticipated inflow demands per lift station by counting the number of houses. In order to determine the number of houses which were contributing inflow rates to their respective lift stations, H. Davis Cole & Associates, LLC. (HDCA) used the SewerGEMS model and Google Earth to do so. This will allow HDCA to calibrate the model appropriately and determine whether or not the inflow rate data from the field is accurate.

REFERENCES

Google Earth

St. Bernard Parish Government (SBPG) GIS Data

Civil Engineer's Reference Manual, Domestic Wastewater pg. 28-1, Gallons Per Capita per Day

Civil Engineer's Reference Manual, Wastewater Quantity pg. 28-2, Typical Peaking Factors

"USA.com", Census Data for typical household size for Violet, LA and Meraux, LA.

H. Davis Cole & Associates, LLC

CLIENT SBPG
PROJECT NO 203-09
CHECKED BY/DATE D. MARTIN 5/28

COMPUTED BY Mobaty, William
DATE 5/26/2014
PAGE NO 2

COUNTED NUMBER OF HOUSES AND/OR COMMERCIAL BUILDINGS PER LIFT STATIONS

STATION	# OF HOUSES	# OF COMMERCIAL / WHAT TYPE
VI-01	0	0
VI-02	233	0
VI-03	44	0
VI-04	96	0
VI-05	359	7
VI-06	65	0
VI-07	47	0
VI-08	79	0
VI-09	112	0
VI-10	228	0
VI-11	46	0
VI-12	16	0
VI-13	25	0
VI-14	77	1
VI-15	11	0
VI-16	99	0
VI-17	197	2
VI-18	108	0

CALCULATION FOR STATION VI-02 (AVERAGE DAILY FLOW)

$$Q\,(gpd) = \text{No. Houses}\left(\frac{\text{Avg. Residents}}{\text{Household}}\right)\left(\frac{150\,g}{c \cdot d}\right)^{*}$$

From Civil Engineer's Reference Manual, Domestic Wastewater - pg. 28-1, a common range for domestic wastewater flow is 100 to 125 gpcd.

To be conservative HDCA chose to use a value of 150 gpcd.

The average household size for this region is 2.92 residents/household. This can be found from usa.com/violet-la-population-and-races.htm!.

$$Q\,(gpd) = 233\ \text{houses}\left(\frac{2.92\ \text{capita}}{\text{house}}\right)\left(\frac{150\,g}{c \cdot d}\right) = 102{,}054\ gpd$$

$$\left[Q\,(gpm) = 102{,}054\,g\left(\frac{1\,d}{24\,hrs}\right)\left(\frac{1\,hr}{60\,min}\right) = 70.87\ gpm\right]$$

The calculation for the rest of the stations was identical, except for the number of houses contributing to each station. The attached spreadsheet contains the estimated daily avg. wastewater flow per lift station.

CALCULATION FOR PEAK HOURLY FLOW (STATION V1-02)

From "Civil Engineer's Reference Manual" pg. 28-2, the ratio of peak hourly flow to average flow should be calculated from the following relationship in which P is the population served in thousands of people at a particular point in the network.

$$\frac{Q_{peak}}{Q_{average}} = \frac{18+\sqrt{P}}{4+\sqrt{P}} \Rightarrow Q_{peak} = Q_{avg.}\left[\frac{18+\sqrt{P}}{4+\sqrt{P}}\right]$$

For V1-02;

$Q_{avg.} = 70.87$ gpm

$$P = 233 \text{ houses}\left(\frac{2.42 \text{ people}}{\text{house}}\right)\left(\frac{1}{1000}\right) = 0.68$$

$$\left[Q_{peak} = 70.87 \text{ gpm}\left[\frac{18+\sqrt{0.68}}{4+\sqrt{0.68}}\right] = 276.51 \text{ gpm}\right]$$

The calculation for the rest of the stations was identical, except for the number of houses contributing to each station. The attached spreadsheet contains the peak wastewater flow per lift station.

Table #.# - Daily Wastewater Flow From Houses									
Station	Total Number of		Avg. Wastewater Flow		Q_{peak} / $Q_{average}$	Peak Wastewater Flow		Peaking Factor = 6	
	Houses	Commercial Builldings	(gpd)	(gpm)		(gpd)	(gpm)	(gpd)	(gpm)
V1-01	0	0	0	0	4.50	0	0.00	0	0.00
V1-02	233	0	102054	70.87	3.90	398179	276.51	612324	425.23
V1-03	44	0	19272	13.38	4.21	81177	56.37	115632	80.30
V1-04	96	0	42048	29.20	4.09	172013	119.45	252288	175.20
V1-05	359	7	160308	111.33	3.78	606157	420.94	961848	667.95
V1-06	65	0	28470	19.77	4.16	118328	82.17	170820	118.63
V1-07	47	0	20586	14.30	4.20	86530	60.09	123516	85.78
V1-08	79	0	34602	24.03	4.12	142726	99.12	207612	144.18
V1-09	112	0	49056	34.07	4.06	199275	138.39	294336	204.40
V1-10	228	0	99864	69.35	3.91	390170	270.95	599184	416.10
V1-11	46	0	20148	13.99	4.21	84747	58.85	120888	83.95
V1-12	16	0	7008	4.87	4.32	30279	21.03	42048	29.20
V1-13	25	0	10950	7.60	4.28	46850	32.53	65700	45.63
V1-14	77	1	34164	23.73	4.13	140992	97.91	204984	142.35
V1-15	11	0	4818	3.35	4.35	20958	14.55	28908	20.08
V1-16	99	0	43362	30.11	4.09	177146	123.02	260172	180.68
V1-17	197	2	87162	60.53	3.94	343398	238.47	522972	363.18
V1-18	108	0	47304	32.85	4.07	192486	133.67	283824	197.10
Violet WWTP	666	0	291708	202.575	3.60	1048755	728.30	1750248	1215.45

28 Wastewater Quantity and Quality

1. Domestic Wastewater 28-1
2. Industrial Wastewater 28-1
3. Municipal Wastewater 28-2
4. Wastewater Quantity 28-2
5. Treatment Plant Loading 28-3
6. Sewer Pipe Materials 28-3
7. Gravity and Force Collection Systems 28-4
8. Sewer Velocities 28-4
9. Sewer Sizing 28-4
10. Street Inlets 28-5
11. Manholes 28-5
12. Sulfide Attack 28-5
13. Wastewater Characteristics 28-5
14. Solids 28-5
15. Microbial Growth 28-6
16. Dissolved Oxygen in Wastewater 28-7
17. Reoxygenation 28-7
18. Deoxygenation 28-7
19. Tests of Wastewater Characteristics 28-8
20. Biochemical Oxygen Demand 28-8
21. Seeded BOD 28-9
22. Dilution Purification 28-9
23. Response to Dilution Purification 28-10
24. Chemical Oxygen Demand 28-12
25. Relative Stability 28-12
26. Chlorine Demand and Dose 28-13
27. Breakpoint Chlorination 28-13
28. Nitrogen 28-13
29. Organic Compounds in Wastewater 28-13
30. Heavy Metals in Wastewater 28-14
31. Wastewater Compositing 28-14
32. Wastewater Standards 28-14

Nomenclature

BOD	biochemical oxygen demand	mg/L	mg/L
C	concentration	mg/L	mg/L
COD	chemical oxygen demand	mg/L	mg/L
d	depth of flow	ft	m
D	oxygen deficit	mg/L	mg/L
DO	dissolved oxygen	mg/L	mg/L
DO*	dissolved oxygen of the seed	mg/L	mg/L
k	rate constant	days^{-1}	days^{-1}
P	slope	–	–
Q	population	–	–
	flow quantity	gal/day	L/day
r	rate of change in oxygen content	mg/L-day	mg/L·day
S	slope	ft/ft	m/m
t	time	sec	s
T	temperature	°F	°C
v	velocity	ft/sec	m/s
V	volume	mL	mL
x	distance	ft	m

Symbols

θ	temperature constant	–	–

Subscripts

0	initial
5	five-day
c	critical
d	deoxygenation
e	equivalent
f	final
i	initial
m	maximum
r	reoxygenation or river
sat	saturated
t	at time t
T	at temperature T
u	ultimate carbonaceous
w	wastewater

1. DOMESTIC WASTEWATER

Domestic wastewater refers to *sanitary wastewater* discharged from residences, commercial buildings, and institutions. Other examples of domestic wastewater sources are mobile homes, hotels, schools, offices, factories, and other commercial enterprises, excluding manufacturing facilities.

The volume of domestic wastewater varies from 50 to 250 gallons per capita day (gpcd) (190 to 950 Lpcd) depending on sewer uses. A more common range for domestic wastewater flow is 100 to 120 gpcd (380 to 450 Lpcd), which assumes that residential dwellings have major water-using appliances such as dishwashers and washing machines.

2. INDUSTRIAL WASTEWATER

Small manufacturing facilities within municipal limits ordinarily discharge *industrial wastewater* into the city sewer system only after pretreatment. In *joint*

processing of wastewater, the municipality accepts responsibility for final treatment and disposal. The manufacturing plant may be required to pretreat the wastewater and equalize flow by holding it in a basin for stabilization prior to discharge to the sewer.

Uncontaminated streams (e.g., cooling water), in many cases, can be discharged into sewers directly. However, pretreatment at the industrial site is required for wastewaters having strengths and/or characteristics significantly different from sanitary wastewater.

To minimize the impact on the sewage treatment plant, consideration is given to modifications in industrial processes, segregation of wastes, flow equalization, and waste strength reduction. Modern industrial/manufacturing processes require segregation of separate waste streams for individual pretreatment, controlled mixing, and/or separate disposal. Process changes, equipment modifications, by-product recovery, and in-plant wastewater reuse can result in cost savings for both water supply and wastewater treatment.

Toxic waste streams are not generally accepted into the municipal treatment plant at all. Toxic substances require appropriate pretreatment prior to disposal by other means.

3. MUNICIPAL WASTEWATER

Municipal wastewater is the general name given to the liquid collected in sanitary sewers and routed to municipal sewage treatment plants. Many older cities have *combined sewer systems* where storm water and sanitary wastewaters are collected in the same lines. The combined flows are conveyed to the treatment plant for processing during dry weather. During wet weather, when the combined flow exceeds the plant's treatment capacity, the excess flow often bypasses the plant and is discharged directly into the watercourse.

4. WASTEWATER QUANTITY

Approximately 70 to 80% of a community's domestic and industrial water supply returns as wastewater. This water is discharged into the sewer systems, which may or may not also function as storm drains. Therefore, the nature of the return system must be known before sizing can occur.

Infiltration, due to cracks and poor joints in old or broken lines, can increase the sewer flow significantly. Infiltration per mile (kilometer) per in (mm) of pipe diameter is limited by some municipal codes to 500 gpd/mi-in (46 Lpd/km·mm). Modern piping materials and joints easily reduce the infiltration to 200 gpd/in-mi (18 Lpd/km·mm) and below. Infiltration can also be roughly estimated as 3 to 5% of the peak hourly domestic rate or as 10% of the average rate.

Inflow is another contributor to the flow in sewers. Inflow is water discharged into a sewer system from such sources as roof down spouts, yard and area drains, parking area catch basins, curb inlets, and holes in manhole covers.

Sanitary sewer sizing is commonly based on an assumed average of 100 to 125 gpcd (380 to 474 Lpcd). There will be variations in the flow over time, although the variations are not as pronounced as they are for water supply. Hourly variations are the most significant. The flow rate pattern is essentially the same from day to day. Weekend flow patterns are not significantly different from weekday flow patterns. Seasonal variation depends on the location, local industries, and infiltration.

Table 28.1 lists typical *peaking factors* (i.e., peak multipliers) for treatment plant influent volume. Due to storage in ponds, clarifiers, and sedimentation basins, these multipliers are not applicable throughout all processes in the treatment plant.

Table 28.1 *Typical Variations in Wastewater Flows (based on average annual daily flow)*

flow description	typical time	peaking factor
daily average	–	1.0
daily peak	10 to 12 a.m.	2.25
daily minimum	4 to 5 a.m.	0.4
seasonal average	May, June	1.0
seasonal peak	late summer	1.25
seasonal minimum	late winter	0.9

Recommended Standards for Sewage Works ("Ten States' Standards," abbreviated TSS) specifies that new sanitary sewer systems should be designed for an average flow of 100 gpcd (380 Lpcd or 0.38 m^3/day) which includes an allowance for normal infiltration [TSS Sec. 11.243]. However, the sewer pipe must be sized to carry the peak flow as a gravity flow. In the absence of any studies or other justifiable methods, the ratio of peak hourly flow to average flow should be calculated from the following relationship in which P is the population served in thousands of people at a particular point in the network.

$$\frac{Q_{\text{peak}}}{Q_{\text{ave}}} = \frac{18 + \sqrt{P}}{4 + \sqrt{P}}$$

Collectors (i.e., *collector sewers, trunks,* or *mains*) are pipes that collect wastewater from individual sources and carry it to interceptors (see Fig. 28.1). Collectors must be designed to handle the maximum hourly flow, including domestic and infiltration, as well as additional discharge from industrial plants nearby. Peak flows of 400 gpcd (1500 Lpcd) for laterals and submains flowing full and 250 gpcd (950 Lpcd) for main, trunk, and outfall sewers can be assumed for design purposes, making the peaking factors approximately 4.0 and 2.5 for

USA.COM

Local Data Search

Search State, County, City, Zip Code, or Area Code

Violet, LA
- Basic Information
- Population and Races
- Income and Careers
- Housing
- School District
- Public Schools
- Private Schools
- Public Library
- Weather
- Natural Disasters & Extremes
- Air Quality
- Environmental Watch

Saint Bernard County

Louisiana State

New Orleans, Metairie, Kenner Area

Violet, LA Population and Races

As of 2010, the total population of Violet is 4,973, which is 41.87% less than it was in 2000. The population growth rate is much lower than the state average rate of 1.44% and is much lower than the national average rate of 9.71%. The Violet population density is 1,087.20 people per square mile, which is much higher than the state average density of 86.55 people per square mile and is much higher than the national average density of 81.32 people per square mile. The most prevalent race in Violet is black, which represent 55.40% of the total population. The average Violet education level is lower than the state average and is lower than the national average.

Hot Rankings

Fastest / Slowest Growing Cities Nearby
Best / Worst Cities by Crime Rate Nearby
Richest / Poorest Cities by Income Nearby
Expensive / Cheapest Homes Nearby
Most / Least Educated Cities Nearby
Fastest / Slowest Growing Cities in LA
High / Low LA Cities by Males Employed
High / Low LA Cities by Females Employed
Best / Worst Cities by Crime Rate in LA
Richest / Poorest Cities by Income in LA
Expensive / Cheapest Homes by City in LA
Most / Least Educated Cities in LA

Topics:

Population Growth | Population Density | Population by Races
Population by First Ancestry | Population by Gender | Population by Age
Education | School Enrollment | Household and Family
Marital Status | Place of Birth and Citizenship | Language

Population in 2010: 4,973. #108

Population Growth Since 2000, #386

Violet, LA	-41.87%
Louisiana	1.44%
U.S.	9.71%

Population Density, #126

Violet, LA	1,087.20 per square mile
Louisiana	86.55 per square mile
U.S.	81.32 per square mile

Population by Races

White:	2,015 (40.52%, #379)
Black:	2,755 (55.40%, #96)
Hispanic:	233 (4.69%, #76)
Asian:	28 (0.56%, #147)
Native (American Indian, Alaska Native, Hawaiian Native, etc.):	34 (0.68%, #140)
One Race, Other:	46 (0.92%, see rank)
Two or More Races:	95 (1.91%, see rank)

Hispanic Population

Mexican:	32 (13.73%, see rank)
Puerto Rican:	8 (3.43%, see rank)
Cuban:	11 (4.72%, see rank)
Central American:	45 (19.31%, see rank)
South American:	5 (2.15%, see rank)

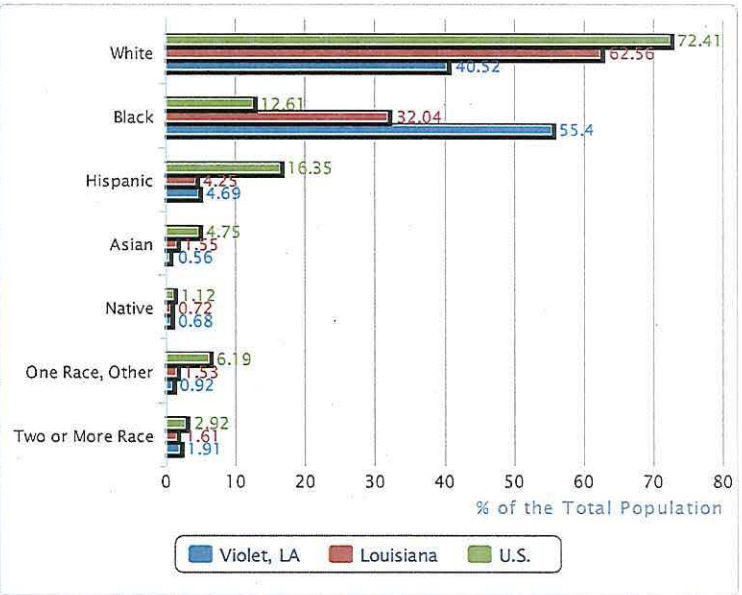

*Based on 2010 data. View historical race c .

Population by First Ancestry

4,954 (90.88%) out of the total population of 5,451 reported first ancestry.

	Violet, LA	% of the Total Population	Louisiana	U.S.
Arab	7	0.13%, see rank	0.35%	0.53%
Czech	0	0.00%, see rank	0.12%	0.50%
Danish	0	0.00%, see rank	0.10%	0.45%
Dutch	0	0.00%, see rank	0.57%	1.51%
English	238	4.37%, see rank	6.53%	8.53%
French	1,057	19.39%, see rank	16.66%	3.54%
German	491	9.01%, see rank	8.28%	15.79%
Greek	10	0.18%, see rank	0.13%	0.42%
Hungarian	0	0.00%, see rank	0.11%	0.48%
Irish	91	1.67%, see rank	7.85%	11.36%
Italian	266	4.88%, see rank	4.93%	5.66%
Norwegian	0	0.00%, see rank	0.26%	1.46%
Polish	0	0.00%, see rank	0.48%	3.13%
Portuguese	0	0.00%, see rank	0.10%	0.46%
Russian	0	0.00%, see rank	0.17%	0.97%
Scotch-Irish	0	0.00%, see rank	0.94%	1.07%
Scottish	39	0.72%, see rank	1.00%	1.81%
Subsaharan African	152	2.79%, see rank	0.78%	0.93%
Swedish	0	0.00%, see rank	0.28%	1.34%
Swiss	0	0.00%, see rank	0.07%	0.31%
Ukrainian	0	0.00%, see rank	0.04%	0.31%
American	253	4.64%, see rank	9.83%	6.72%
Welsh	0	0.00%, see rank	0.24%	0.60%

*Based on 2008-2012 data. View historical first ancestry data.

Population by Gender

Male: 2,390 (48.06%, see rank)
Females: 2,583 (51.94%, see rank)

Violet, LA	Male: 48.06%	Female: 51.94%
Louisiana	Male: 48.95%	Female: 51.05%
U.S.	Male: 49.16%	Female: 50.84%

*Based on 2010 data. View historical gender data.

Population by Age

Median Age (see rank)

Violet, LA	33.20 years old
Louisiana	35.80 years old
U.S.	37.20 years old

Median Age, Male (see rank)

Violet, LA	32.50 years old
Louisiana	34.50 years old
U.S.	35.80 years old

Median Age, Female (see rank)

Violet, LA	33.70 years old
Louisiana	37.20 years old
U.S.	38.50 years old

	Violet, LA	% of the Total Population	Louisiana	U.S.
Under 5 years	375	7.54%, see rank	6.93%	6.54%
5 to 9 years	399	8.02%, see rank	6.76%	6.59%
10 to 14 years	369	7.42%, see rank	6.77%	6.70%
15 to 19 years	436	8.77%, see rank	7.21%	7.14%
20 to 24 years	361	7.26%, see rank	7.46%	6.99%
25 to 34 years	637	12.81%, see rank	13.86%	13.30%
35 to 44 years	621	12.49%, see rank	12.45%	13.30%
45 to 54 years	779	15.66%, see rank	14.43%	14.58%
55 to 64 years	582	11.70%, see rank	11.81%	11.82%
65 to 74 years	284	5.71%, see rank	6.88%	7.03%
75 to 84	94	1.89%, see rank	3.97%	4.23%
85 years and over	36	0.72%, see rank	1.45%	1.78%

*Based on 2010 data. View historical age data.

Education for the 25 Years and Over

	Violet, LA		% Louisiana	U.S.
Total 25 Years and Over Population	3,221	100%	2,940,298	204,336,017
Less Than High School	661	20.52%, see rank	17.82%	14.28%
High School Graduate	1,281	39.77%, see rank	34.30%	28.24%
Some College or Associate Degree	976	30.30%, see rank	26.46%	28.99%
Bachelor Degree	234	7.26%, see rank	14.30%	17.88%
Master, Doctorate, or Professional Degree	69	2.14%, see rank	7.13%	10.61%
USA.com Education Index#	12.23, see rank		-	12.89	13.47

Higher USA.com Education Index means more educated population.

*Based on 2008-2012 data. View historical education level data.

School Enrollment

	Violet, LA			Louisiana		U.S.	
	Total	Public	Private	Public	Private	Public	Private
Nursery School, Preschool, Kindergarten	292	93.15%	6.85%	70.97%	29.03%	70.05%	29.95%
Elementary School (Grades 1-8)	444	94.82%, see rank	5.18%, see rank	83.07%	16.93%	89.62%	10.38%
High School (Grades 9-12)	432	86.57%, see rank	13.43%, see rank	82.67%	17.33%	90.52%	9.48%
College	295	80.00%, see rank	20.00%, see rank	82.42%	17.58%	77.79%	22.21%

*Based on 2008-2012 data. View historical school enrollment data.

Household and Family

	Violet, LA		% Louisiana	U.S.
Total Households	1,700	100%	1,728,360	116,716,292
Average Household Size 2.92, see rank		-	2.55	2.58
1 Person Households	315	18.53%, see rank	26.87%	26.74%
2 or More Person Households	1,385	81.47%, see rank	73.13%	73.26%
Family Households (Families)	1,325	77.94%, see rank	67.12%	66.43%
Average Family Size 3.28, see rank		-	3.10	3.14
Married-Couple Family	747	43.94%, see rank	44.45%	48.42%
Nonfamily Households	375	22.06%, see rank	32.88%	33.57%

*Based on 2010 data. View historical household and family data.

Marital Status of 15 Years and Over

	Violet, LA		% Louisiana	U.S.
15 Years and Over Total	4,236	see rank	3,603,211	248,042,237
Males, 15 Years and Over	1,989	100%, see rank	1,742,444	120,789,875
Never Married	647	32.53%, see rank	36.37%	35.08%
Married	1,107	55.66%, see rank	50.24%	52.93%
Widowed	94	4.73%, see rank	2.82%	2.53%
Divorced	141	7.09%, see rank	10.56%	9.46%
Females, 15 Years and Over	2,247	100%, see rank	1,860,767	127,252,362
Never Married	633	28.17%, see rank	30.47%	28.74%
Married	1,081	48.11%, see rank	46.30%	49.95%
Widowed	176	7.83%, see rank	10.33%	9.34%
Divorced	357	15.89%, see rank	12.90%	11.97%

*Based on 2008-2012 data. View historical marital status data.

Place of Birth and Citizenship

	Violet, LA		% Louisiana	U.S.
Native	5,402	99.10%, see rank	96.31%	87.13%
Born in the State of Residence	5,062	92.86%, see rank	78.49%	58.71%
Born in Different State	340	6.24%, see rank	17.23%	27.04%
Born in Puerto Rico, U.S. Island Areas, or Born Abroad to American Parent(s)	0	0.00%, see rank	0.59%	1.38%
Foreign Born	49	0.90%, see rank	3.69%	12.87%
Foreign Born with U.S. Citizenship	27	0.50%, see rank	1.50%	5.71%
Foreign Born without U.S. Citizenship	22	0.40%, see rank	2.19%	7.16%
Born In Europe	0	0.00%, see rank	0.35%	1.56%
Born In Asia	11	0.20%, see rank	1.19%	3.67%
Born In Africa	0	0.00%, see rank	0.14%	0.51%

Born In Oceania	0	0.00%, see rank	0.01%	0.07%
Born In Latin America	38	0.70%, see rank	1.93%	6.79%
Born In Northern America	0	0.00%, see rank	0.06%	0.26%

*Based on 2008-2012 data. View historical place of birth and citizenship data.

Language Spoken at Home

	Violet, LA		% Louisiana	U.S.
English	1,884	97.41%, see rank	88.04%	79.64%
Spanish	21	1.09%, see rank	3.95%	11.57%
Other Indo-European Languages	21	1.09%, see rank	6.43%	4.61%
Asian and Pacific Islander Languages	8	0.41%, see rank	1.29%	3.24%
Other	0	0.00%, see rank	0.28%	0.94%

*Based on 2008-2012 data. View historical language spoken at home data.

The USA.com website and domain are privately owned and are not operated by or affiliated with any government or municipal authority.
© 2014 World Media Group, LLC.

USA.COM

Local Data Search

Search State, County, City, Zip Code, or Area Code

USA.com / Louisiana / Saint Bernard County / Meraux, LA / Population and Races

Meraux, LA
- Basic Information
- **Population and Races**
- Income and Careers
- Housing
- School District
- Public Schools
- Private Schools
- Public Library
- Weather
- Natural Disasters & Extremes
- Air Quality
- Environmental Watch

Saint Bernard County

Louisiana State

New Orleans, Metairie, Kenner Area

Meraux, LA Population and Races

Basic Info | Population/Races | Income/Careers | Housing | Education | Others

As of 2010, the total population of Meraux is 5,816, which is 42.94% less than it was in 2000. The population growth rate is much lower than the state average rate of 1.44% and is much lower than the national average rate of 9.71%. The Meraux population density is 1,207.58 people per square mile, which is much higher than the state average density of 86.55 people per square mile and is much higher than the national average density of 81.32 people per square mile. The most prevalent race in Meraux is white, which represent 82.03% of the total population. The average Meraux education level is lower than the state average and is lower than the national average.

Hot Rankings

Fastest / Slowest Growing Cities Nearby
Best / Worst Cities by Crime Rate Nearby
Richest / Poorest Cities by Income Nearby
Expensive / Cheapest Homes Nearby
Most / Least Educated Cities Nearby
Fastest / Slowest Growing Cities in LA
High / Low LA Cities by Males Employed
High / Low LA Cities by Females Employed
Best / Worst Cities by Crime Rate in LA
Richest / Poorest Cities by Income in LA
Expensive / Cheapest Homes by City in LA
Most / Least Educated Cities in LA

Topics:

Population Growth | Population Density | Population by Races
Population by First Ancestry | Population by Gender | Population by Age
Education | School Enrollment | Household and Family
Marital Status | Place of Birth and Citizenship | Language

Population in 2010: 5,816. #98

Population Growth Since 2000, #387

Meraux, LA	-42.94%
Louisiana	1.44%
U.S.	9.71%

Population Density, #105

Meraux, LA	1,207.58 per square mile
Louisiana	86.55 per square mile
U.S.	81.32 per square mile

Population by Races

White:	4,771 (82.03%, #162)
Black:	616 (10.59%, #329)
Hispanic:	461 (7.93%, #35)
Asian:	100 (1.72%, #52)
Native (American Indian, Alaska Native, Hawaiian Native, etc.):	50 (0.86%, #108)
One Race, Other:	131 (2.25%, see rank)
Two or More Races:	148 (2.54%, see rank)

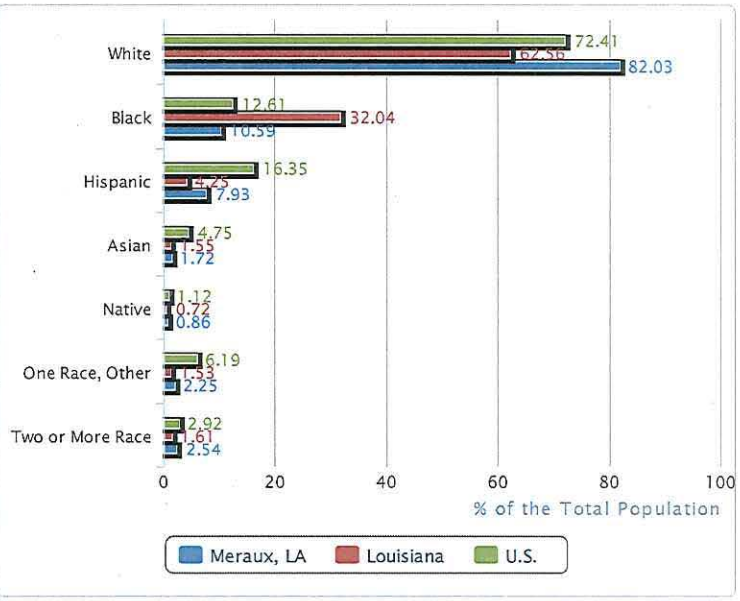

Hispanic Population

Mexican:	92 (19.96%, see rank)
Puerto Rican:	31 (6.72%, see rank)
Cuban:	20 (4.34%, see rank)
Central American:	154 (33.41%, see rank)
South American:	15 (3.25%, see rank)

Asian Population

Indian:	4 (4.00%, see rank)

Chinese:	0 (0.00%, see rank)
Filipino:	32 (32.00%, see rank)
Japanese:	0 (0.00%, see rank)
Korean:	1 (1.00%, see rank)
Vietnamese:	63 (63.00%, see rank)
Asian, Other:	0 (0.00%, see rank)

*Based on 2010 data. View historical race data.

Population by First Ancestry

4,939 (84.92%) out of the total population of 5,816 reported first ancestry.

	Meraux, LA	% of the Total Population	Louisiana	U.S.
Arab	0	0.00%, see rank	0.35%	0.53%
Czech	0	0.00%, see rank	0.12%	0.50%
Danish	0	0.00%, see rank	0.10%	0.45%
Dutch	0	0.00%, see rank	0.57%	1.51%
English	395	6.79%, see rank	6.53%	8.53%
French	1,258	21.63%, see rank	16.66%	3.54%
German	660	11.35%, see rank	8.28%	15.79%
Greek	0	0.00%, see rank	0.13%	0.42%
Hungarian	0	0.00%, see rank	0.11%	0.48%
Irish	560	9.63%, see rank	7.85%	11.36%
Italian	977	16.80%, see rank	4.93%	5.66%
Norwegian	9	0.15%, see rank	0.26%	1.46%
Polish	0	0.00%, see rank	0.48%	3.13%
Portuguese	0	0.00%, see rank	0.10%	0.46%
Russian	0	0.00%, see rank	0.17%	0.97%
Scotch-Irish	8	0.14%, see rank	0.94%	1.07%
Scottish	28	0.48%, see rank	1.00%	1.81%
Subsaharan African	0	0.00%, see rank	0.78%	0.93%
Swedish	0	0.00%, see rank	0.28%	1.34%
Swiss	0	0.00%, see rank	0.07%	0.31%
Ukrainian	0	0.00%, see rank	0.04%	0.31%
American	323	5.55%, see rank	9.83%	6.72%
Welsh	0	0.00%, see rank	0.24%	0.60%

*Based on 2008-2012 data. View historical first ancestry data.

Population by Gender

Male: 2,930 (50.38%, see rank)
Females: 2,886 (49.62%, see rank)

Meraux, LA	Male: 50.38%	Female: 49.62%
Louisiana	Male: 48.95%	Female: 51.05%
U.S.	Male: 49.16%	Female: 50.84%

*Based on 2010 data. View historical gender data.

Population by Age

Median Age (see rank)

Meraux, LA	31.70 years old
Louisiana	35.80 years old
U.S.	37.20 years old

Median Age, Male (see rank)

Meraux, LA	31.40 years old
Louisiana	34.50 years old
U.S.	35.80 years old

Median Age, Female (see rank)

Meraux, LA	32.00 years old
Louisiana	37.20 years old
U.S.	38.50 years old

	Meraux, LA	% of the Total Population	Louisiana	U.S.
Under 5 years	471	8.10%, see rank	6.93%	6.54%
5 to 9 years	427	7.34%, see rank	6.76%	6.59%
10 to 14 years	435	7.48%, see rank	6.77%	6.70%
15 to 19 years	462	7.94%, see rank	7.21%	7.14%
20 to 24 years	461	7.93%, see rank	7.46%	6.99%

25 to 34 years	922	15.85%, see rank	13.86%	13.30%
35 to 44 years	811	13.94%, see rank	12.45%	13.30%
45 to 54 years	852	14.65%, see rank	14.43%	14.58%
55 to 64 years	592	10.18%, see rank	11.81%	11.82%
65 to 74 years	239	4.11%, see rank	6.88%	7.03%
75 to 84	121	2.08%, see rank	3.97%	4.23%
85 years and over	23	0.40%, see rank	1.45%	1.78%

*Based on 2010 data. View historical age data.

Education for the 25 Years and Over

	Meraux, LA		% Louisiana	U.S.
Total 25 Years and Over Population	3,634	100%	2,940,298	204,336,017
Less Than High School	697	19.18%, see rank	17.82%	14.28%
High School Graduate	1,380	37.97%, see rank	34.30%	28.24%
Some College or Associate Degree	1,018	28.01%, see rank	26.46%	28.99%
Bachelor Degree	448	12.33%, see rank	14.30%	17.88%
Master, Doctorate, or Professional Degree	91	2.50%, see rank	7.13%	10.61%
USA.com Education Index#	12.46, see rank	-	12.89	13.47

Higher USA.com Education Index means more educated population.

*Based on 2008-2012 data. View historical education level data.

School Enrollment

	Meraux, LA			Louisiana		U.S.	
	Total	Public	Private	Public	Private	Public	Private
Nursery School, Preschool, Kindergarten	228	83.33%	16.67%	70.97%	29.03%	70.05%	29.95%
Elementary School (Grades 1-8)	634	83.75%, see rank	16.25%, see rank	83.07%	16.93%	89.62%	10.38%
High School (Grades 9-12)	327	87.16%, see rank	12.84%, see rank	82.67%	17.33%	90.52%	9.48%
College	251	70.92%, see rank	29.08%, see rank	82.42%	17.58%	77.79%	22.21%
Graduate School	92	73.91%, see rank	26.09%, see rank	71.83%	28.17%	58.62%	41.38%

*Based on 2008-2012 data. View historical school enrollment data.

Household and Family

	Meraux, LA		% Louisiana	U.S.
Total Households	1,994	100%	1,728,360	116,716,292
Average Household Size	2.92, see rank	-	2.55	2.58
1 Person Households	334	16.75%, see rank	26.87%	26.74%
2 or More Person Households	1,660	83.25%, see rank	73.13%	73.26%
Family Households (Families)	1,535	76.98%, see rank	67.12%	66.43%
Average Family Size	3.23, see rank	-	3.10	3.14
Married-Couple Family	1,009	50.60%, see rank	44.45%	48.42%
Nonfamily Households	459	23.02%, see rank	32.88%	33.57%

*Based on 2010 data. View historical household and family data.

Marital Status of 15 Years and Over

	Meraux, LA		% Louisiana	U.S.
15 Years and Over Total	4,510	see rank	3,603,211	248,042,237
Males, 15 Years and Over	2,132	100%, see rank	1,742,444	120,789,875
Never Married	820	38.46%, see rank	36.37%	35.08%
Married	1,163	54.55%, see rank	50.24%	52.93%
Widowed	0	0.00%, see rank	2.82%	2.53%
Divorced	149	6.99%, see rank	10.56%	9.46%
Females, 15 Years and Over	2,378	100%, see rank	1,860,767	127,252,362
Never Married	648	27.25%, see rank	30.47%	28.74%
Married	1,195	50.25%, see rank	46.30%	49.95%
Widowed	181	7.61%, see rank	10.33%	9.34%
Divorced	354	14.89%, see rank	12.90%	11.97%

*Based on 2008-2012 data. View historical marital status data.

Place of Birth and Citizenship

	Meraux, LA		% Louisiana	U.S.
Native	5,511	94.76%, see rank	96.31%	87.13%
Born in the State of Residence	5,047	86.78%, see rank	78.49%	58.71%

Born in Different State	464	7.98%, see rank	17.23%	27.04%
Born in Puerto Rico, U.S. Island Areas, or Born Abroad to American Parent(s)	0	0.00%, see rank	0.59%	1.38%
Foreign Born	305	5.24%, see rank	3.69%	12.87%
Foreign Born with U.S. Citizenship	226	3.89%, see rank	1.50%	5.71%
Foreign Born without U.S. Citizenship	79	1.36%, see rank	2.19%	7.16%
Born In Europe	29	0.50%, see rank	0.35%	1.56%
Born In Asia	158	2.72%, see rank	1.19%	3.67%
Born In Africa	0	0.00%, see rank	0.14%	0.51%
Born In Oceania	0	0.00%, see rank	0.01%	0.07%
Born In Latin America	118	2.03%, see rank	1.93%	6.79%
Born In Northern America	0	0.00%, see rank	0.06%	0.26%

*Based on 2008-2012 data. View historical place of birth and citizenship data.

Language Spoken at Home

	Meraux, LA		% Louisiana	U.S.
English	1,730	90.15%, see rank	88.04%	79.64%
Spanish	93	4.85%, see rank	3.95%	11.57%
Other Indo-European Languages	0	0.00%, see rank	6.43%	4.61%
Asian and Pacific Islander Languages	96	5.00%, see rank	1.29%	3.24%
Other	0	0.00%, see rank	0.28%	0.94%

*Based on 2008-2012 data. View historical language spoken at home data.

Find Census Data Online
myheritage.com/Census_Data
One search, multiple databases. Find the data you're looking for

The USA.com website and domain are privately owned and are not operated by or affiliated with any government or municipal authority.
© 2014 World Media Group, LLC.

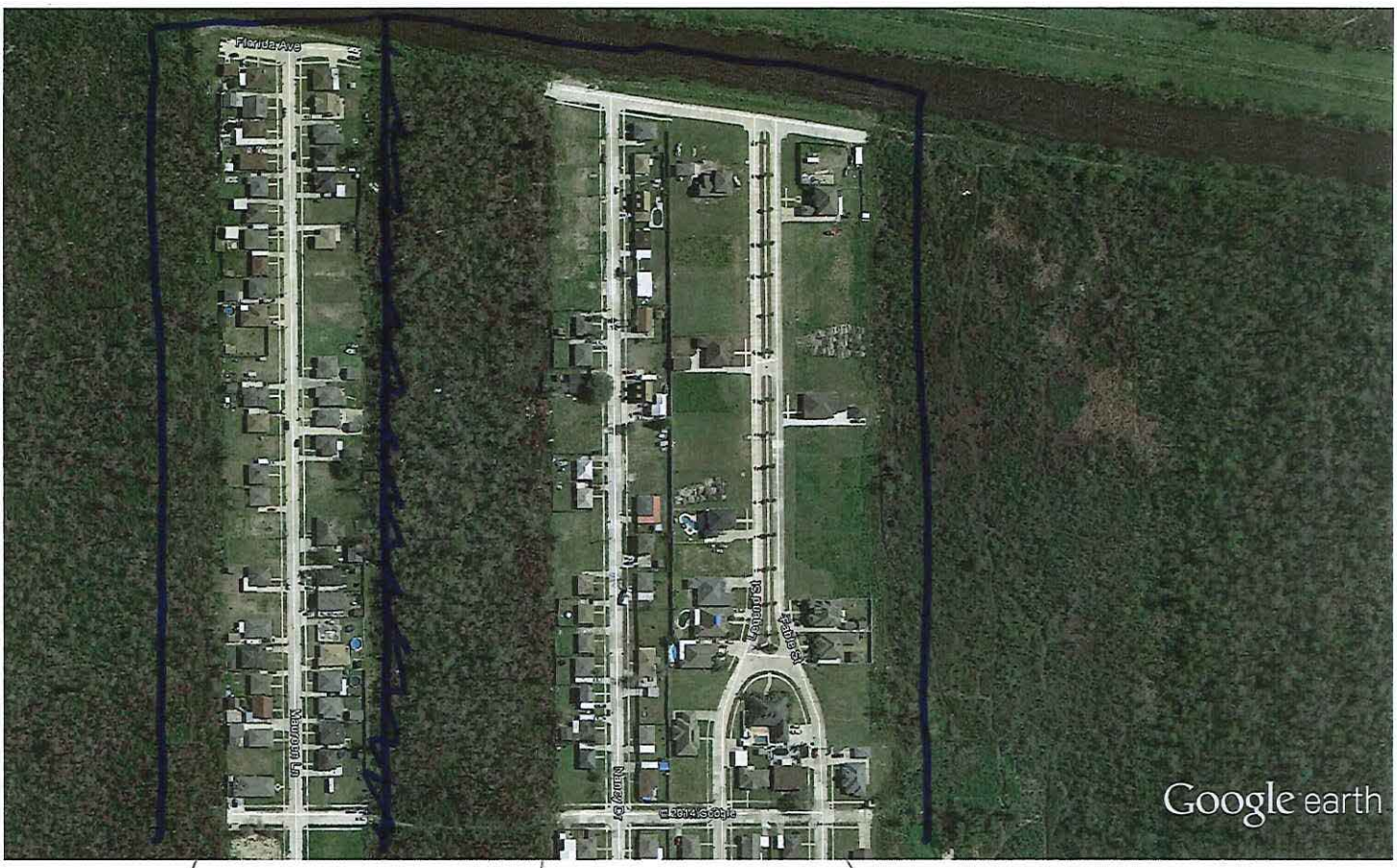

Google earth feet 1000 meters 400

V1.02

25

15

40

40

80

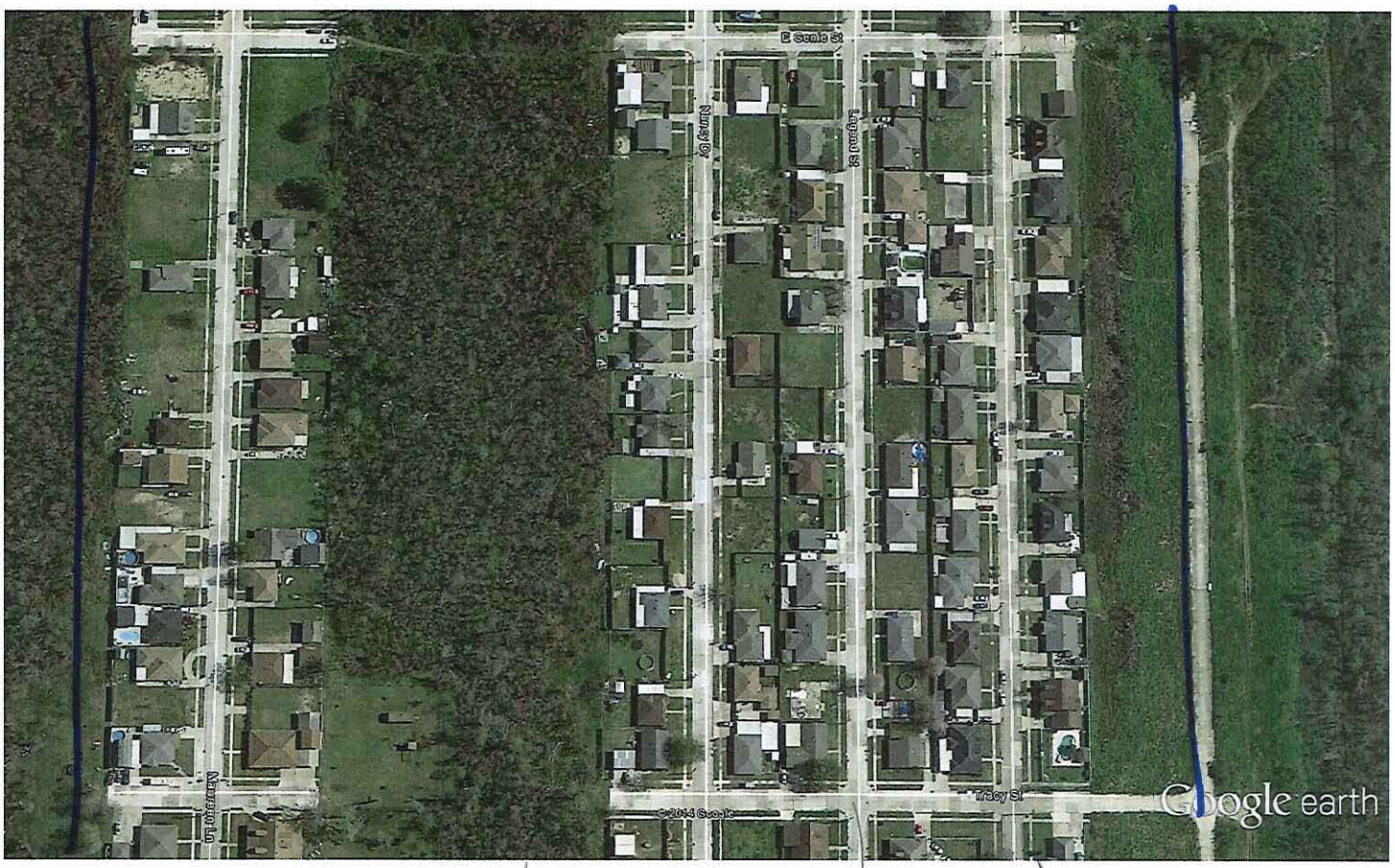

Google earth

feet 800
meters 200

VI-02

26 18 19 21

40

58

78

Google earth

feet 1000
meters 300

VI-02

22

17

21

15

36

53

75

37

35

33 = 96

Google earth

feet 2000

meters 600

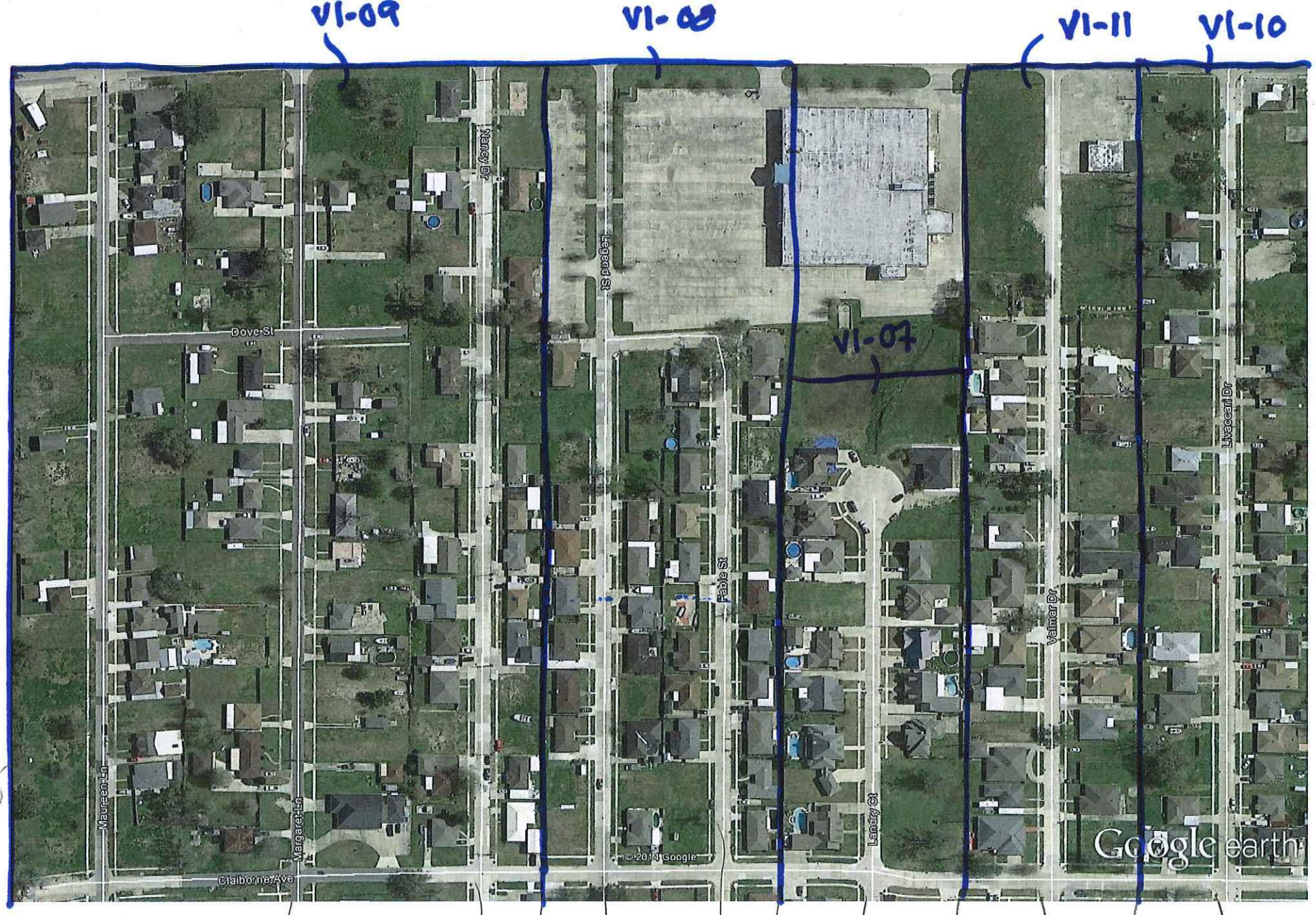

Google earth

feet 1000

meters 400

19 20 13 18 13 20 29

39 31

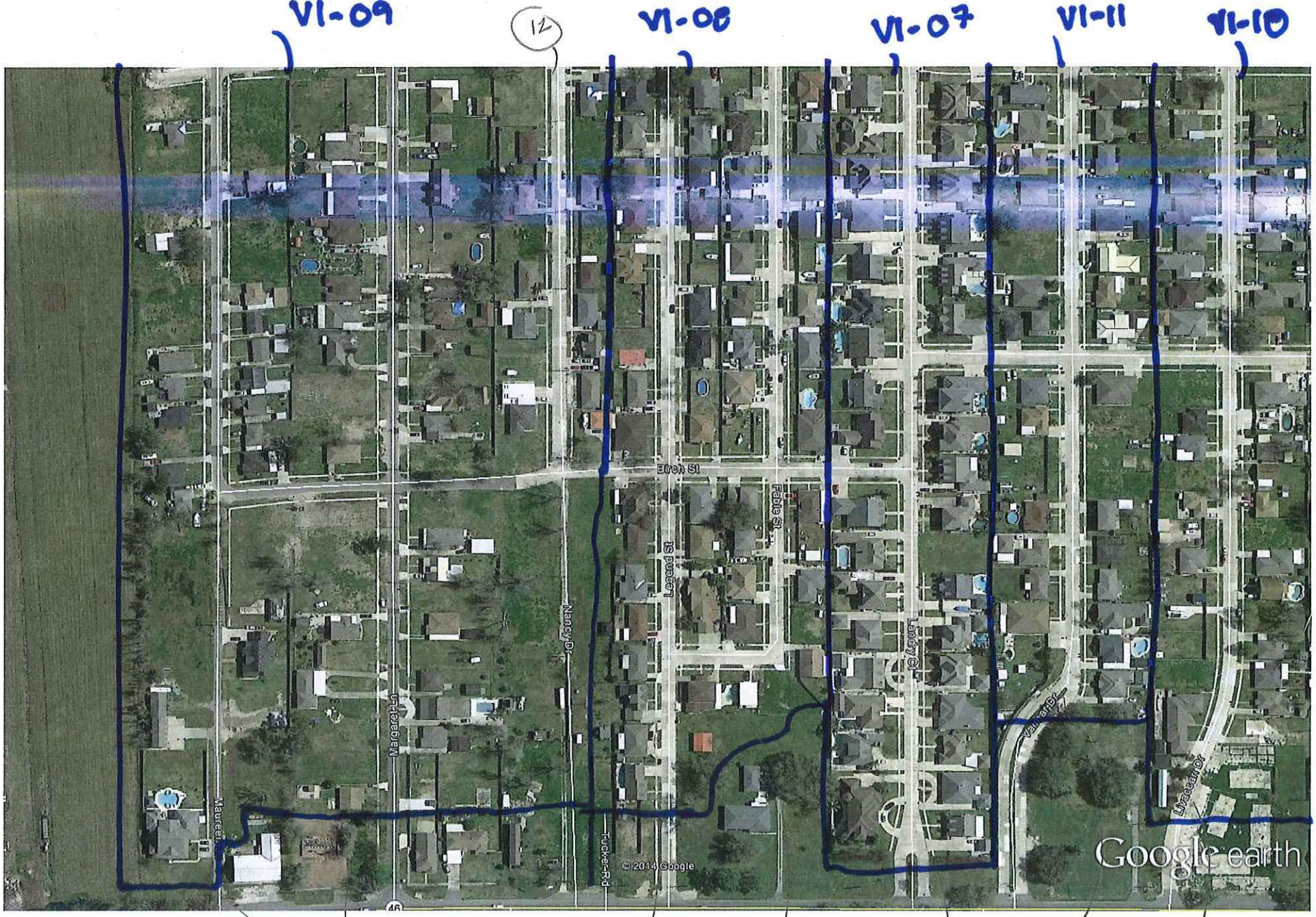

Google earth

feet 1000

meters 400

18 25 26 22 34 26 30

43 49

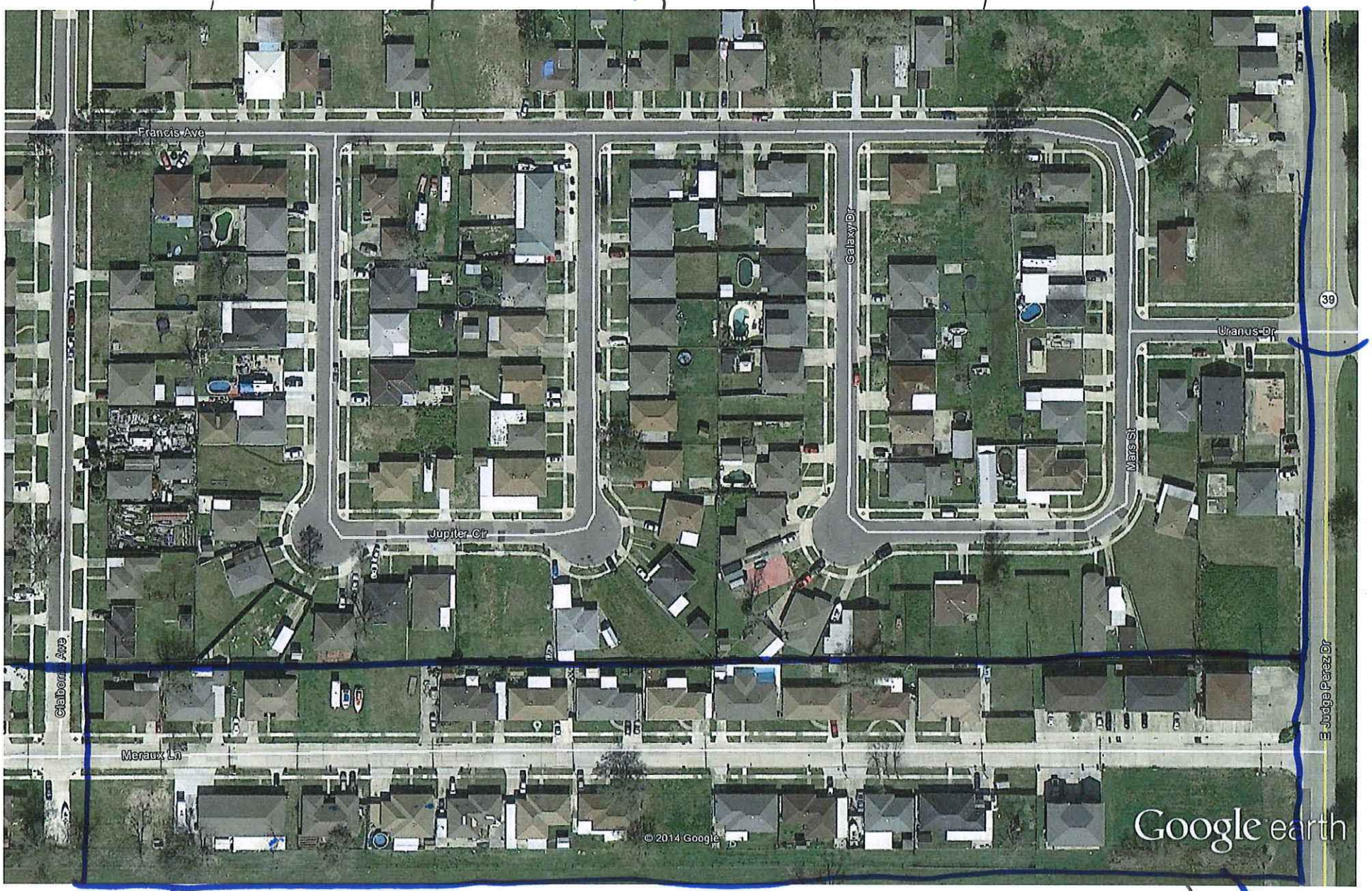

Google earth

feet 800

meters 200

VI-10

VI-13

25

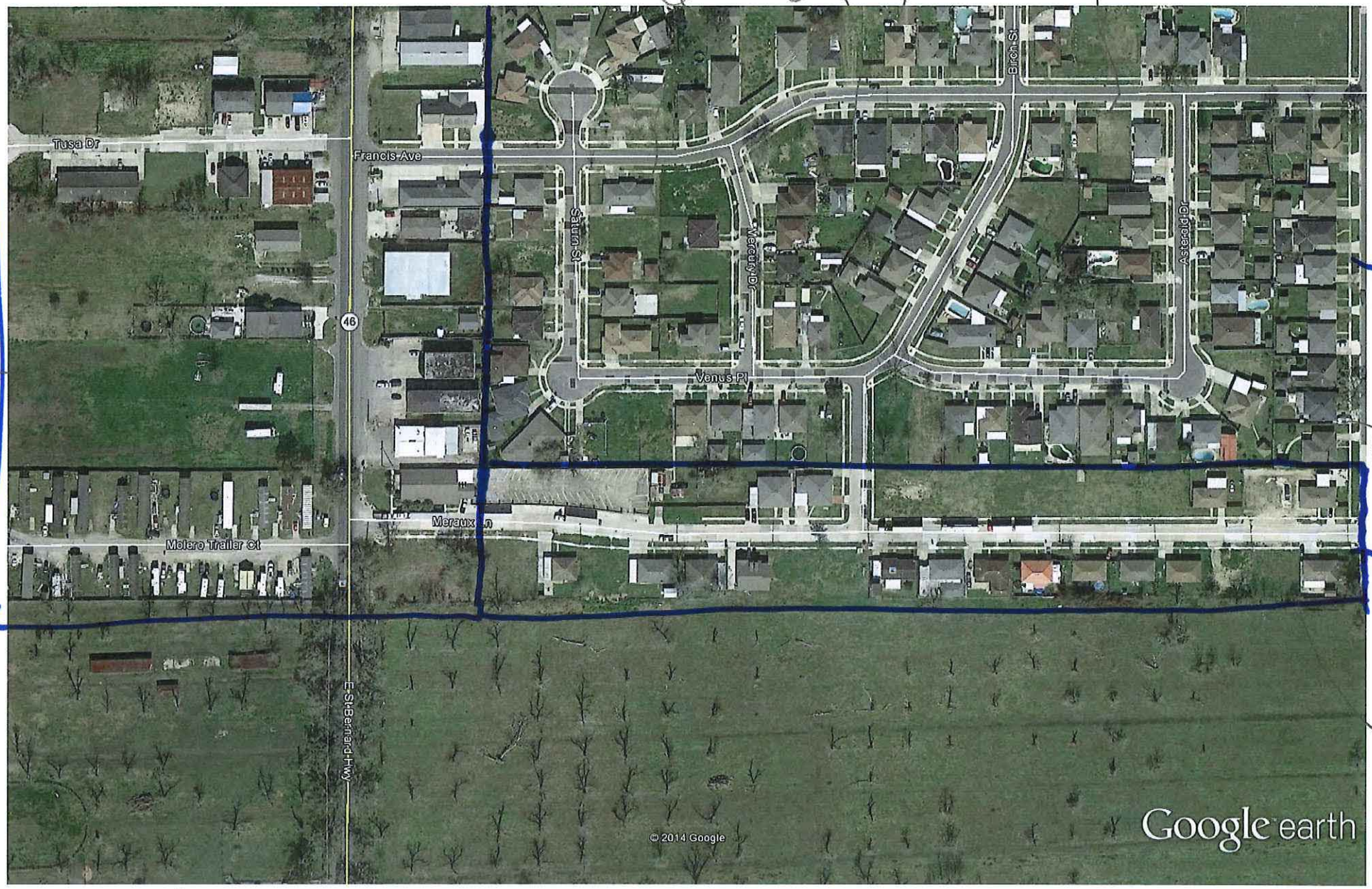

Google earth

feet 1000

meters 300

(28)

Google earth

feet 1000

meters 500

Google earth

feet 1000

meters 400

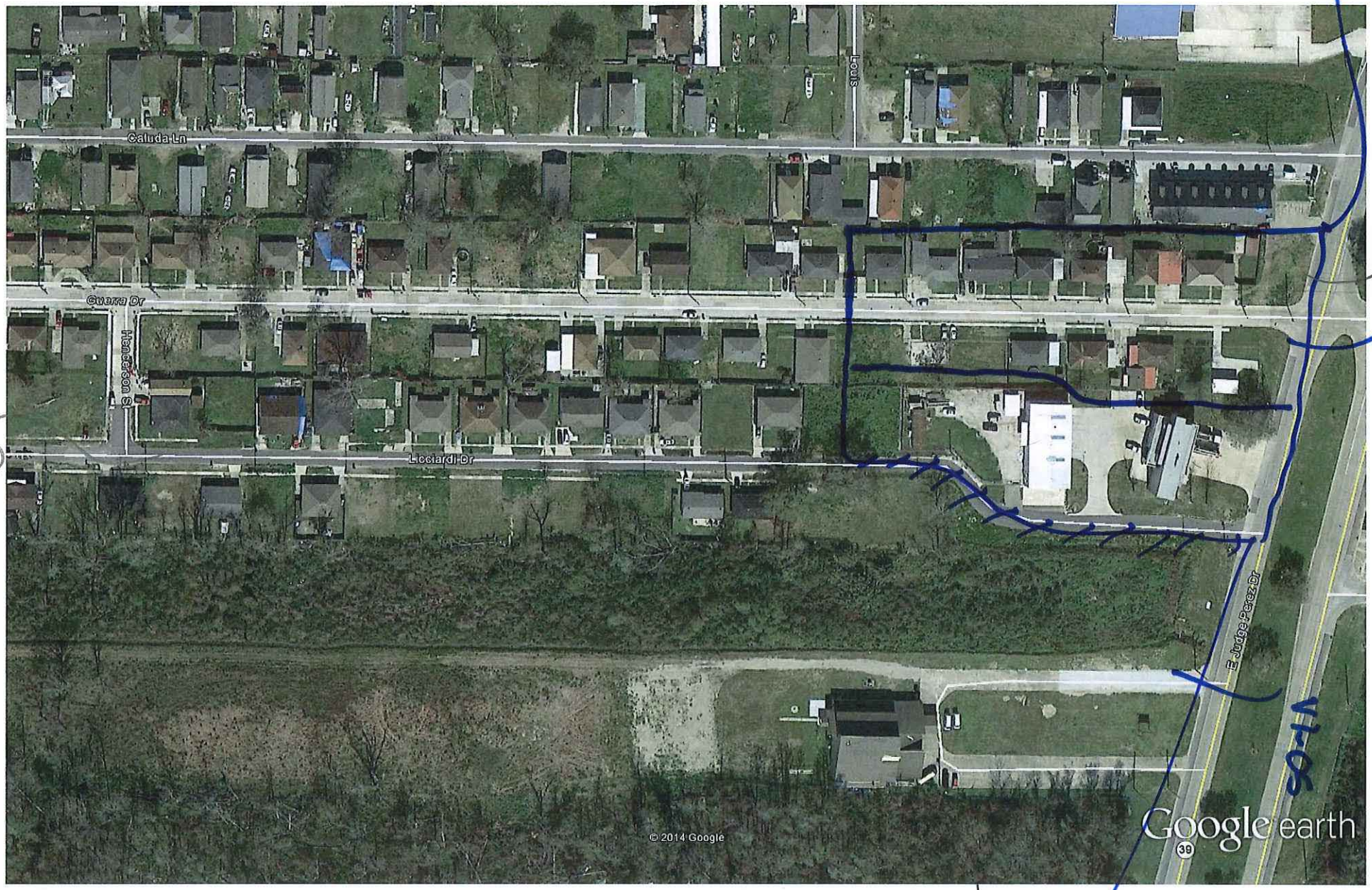

Google earth

feet 1000

meters 300

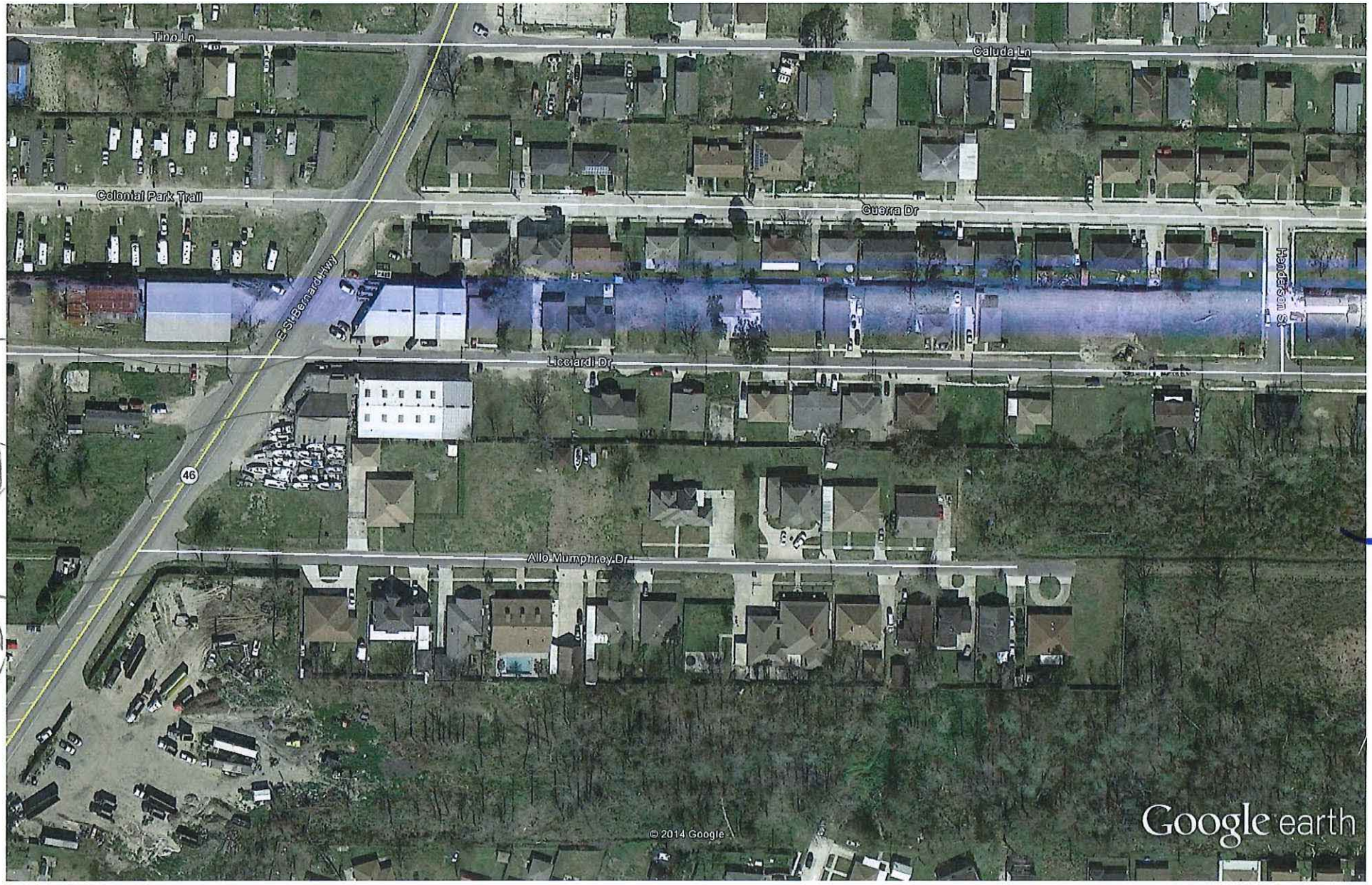

Google earth

feet 1000

meters 300

14

227

14

50-14

Google earth

feet 1000

meters 300

15 14 3 9 28 4 2c?

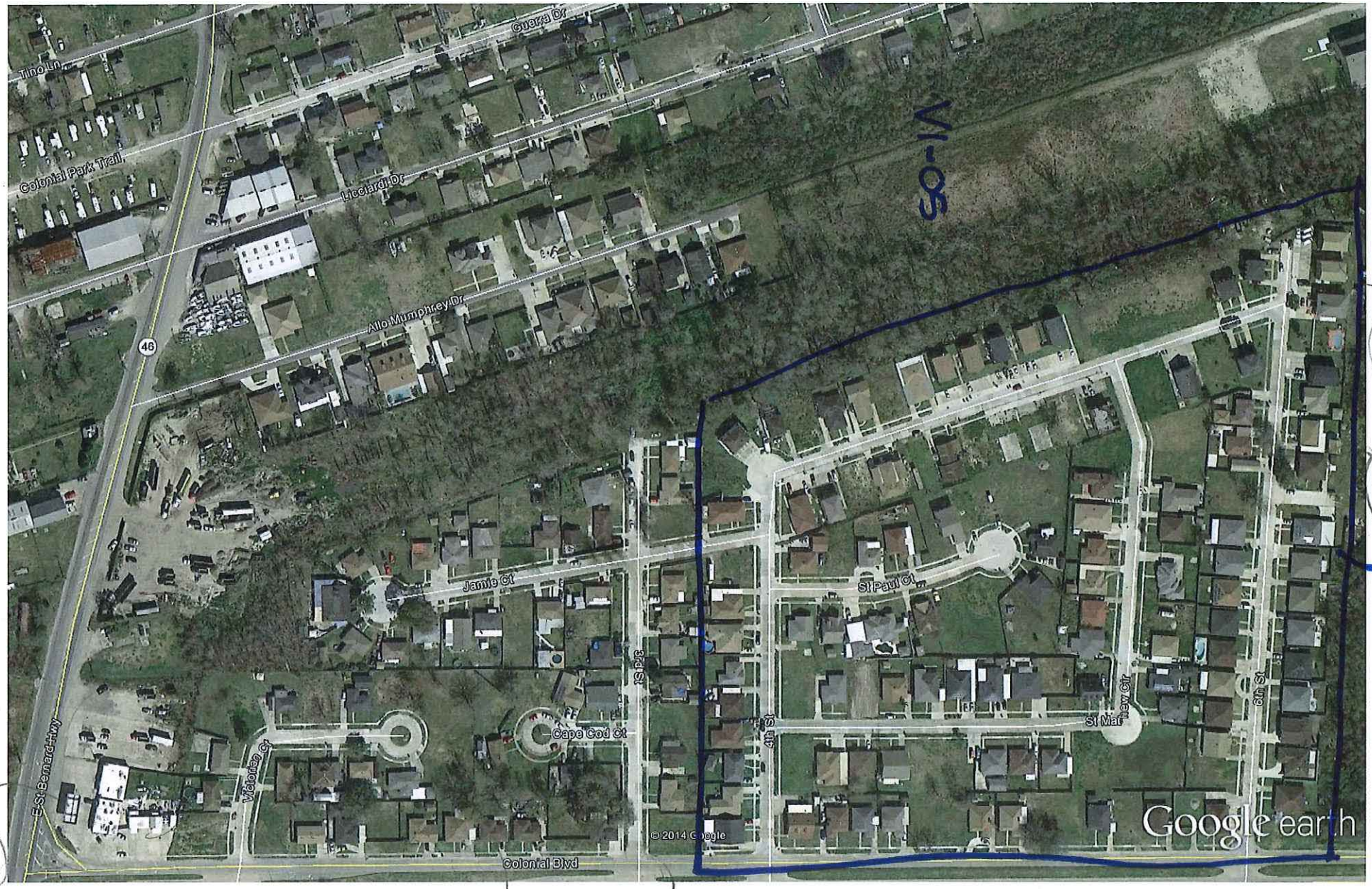

Google earth

feet 1000

meters 400

47

52

1C-7

29

14

Google earth feet 1000 meters 400

VI-17

163

Google earth

feet 1000

meters 400

Google earth

feet 1000

meters 500

TO VIOLET WWTP

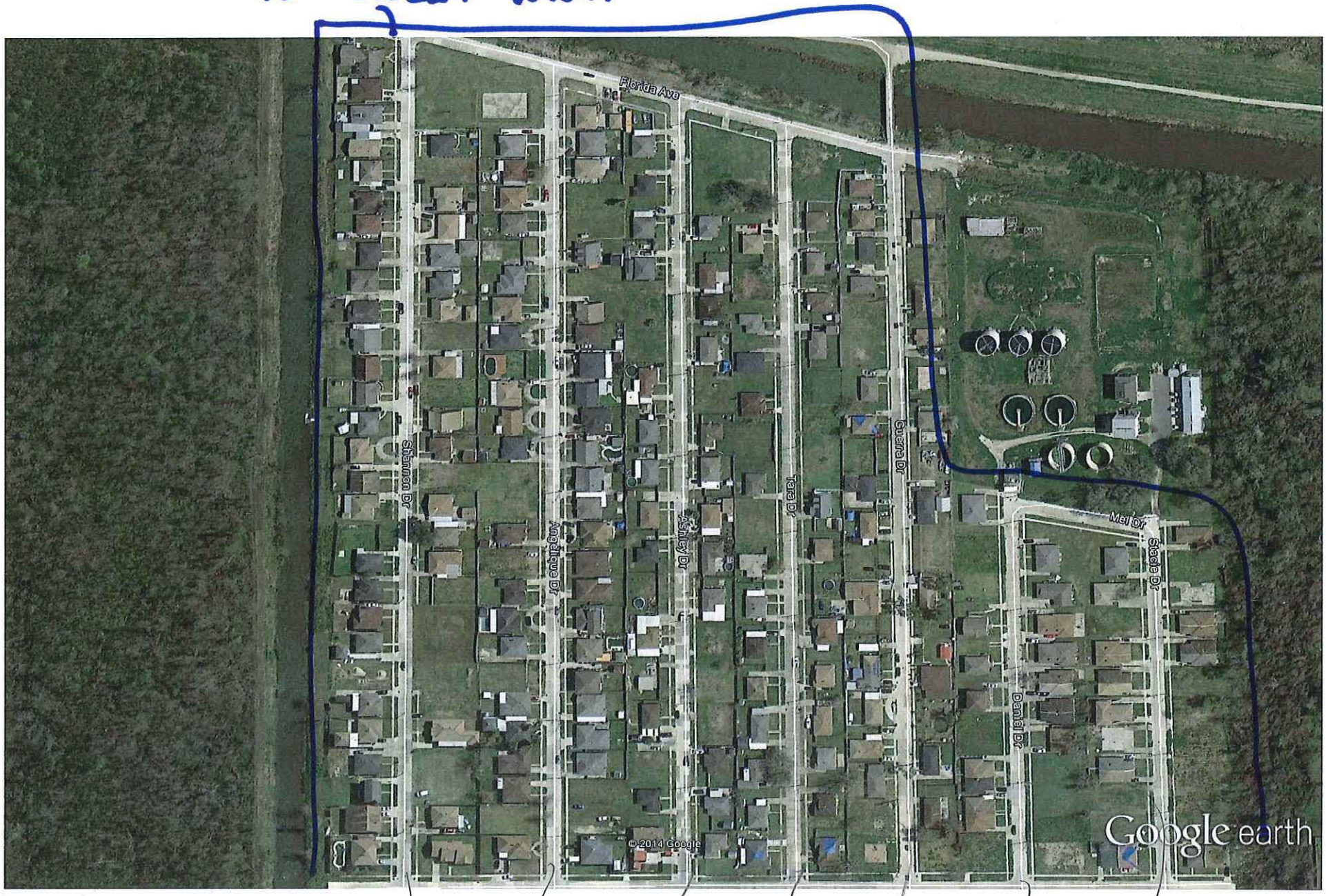

Google earth

feet 1000

meters 400

42 41 25 25 22 14 12

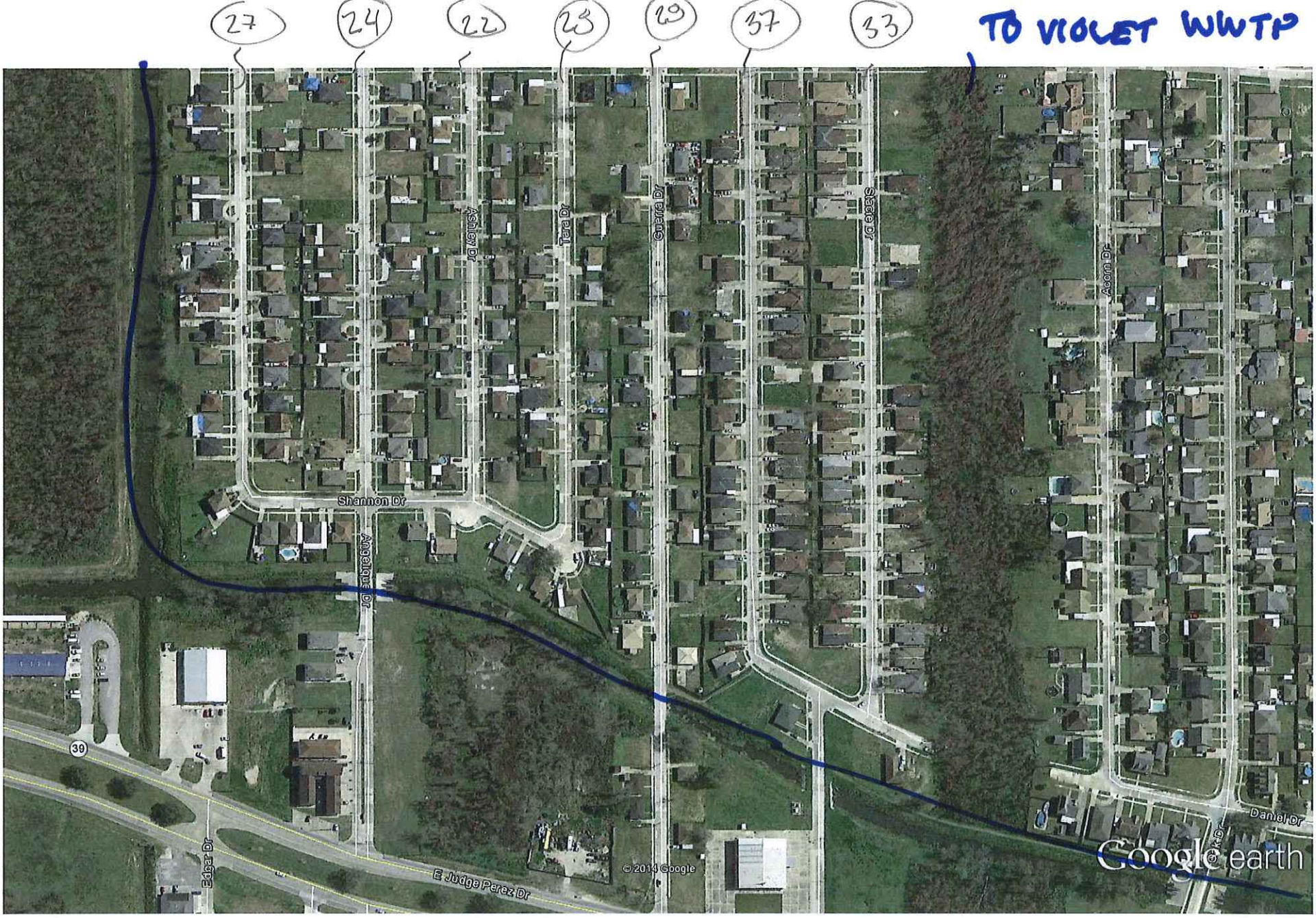

Google earth

feet 1000

meters 500

Google earth

feet 2000

meters 700

(61) (67) (71) (83)

(4) (22)

TO VIOLET WWTP

H. Davis Cole & Associates, LLC

CLIENT SBPG COMPUTED BY McCoy, William

PROJECT NO 2013-09 DATE 5/29/2014

CHECKED BY/DATE PAGE NO 1

OVERVIEW STATEMENT

Determine the diameter of the proposed force main connecting station VI-17 to VI-20. From the calculations regarding the algebraic sums of all lift station flow requirements, the flow rate this force main will handle is 850 gpm. The velocity in the force main should travel around +/- 5 ft./s.

REFERENCES

Cameron Hydraulic Data, "Frequently Used Formulas & Equivalents" pg. 2-13 (Q=VA and Unit Conversions)

ASSUMPTIONS

H. Davis Cole & Associates, LLC. (HDCA) assumed all upstream stations from VI-17 were pumping at capacity

H. Davis Cole & Associates, LLC

CLIENT SBPG
PROJECT NO 2013-09
CHECKED BY/DATE

COMPUTED BY McGeary, William
DATE 5/29/14
PAGE NO 2

CALCULATION FOR THE PROPOSED FORCE MAIN DIAMETER (VI-B)

$Q = VA$

Q = flow rate ($ft.^3/s$)

V = velocity ($ft./s$)

A = Area $(ft.)^2$

$Q = 850\ gpm \left(\frac{0.002228\ ft^3/s}{gpm}\right) = 1.8938\ ft.^3/s$

$V = 5\ ft./s$

$A = ?$

$\left[A = \frac{Q}{V} = \frac{1.8938\ ft^3/s}{5\ ft/s} = 0.37876\ ft^2\right]$

$A = \frac{\pi}{4} D^2$

D = diameter

$\left[D = \sqrt{\frac{4A}{\pi}} = \left[\frac{4(0.37876\ ft^2)}{\pi}\right]^{1/2} = 0.6944\ ft. \left(\frac{12\ in}{ft.}\right) = 8.33''\right]$

H. Davis Cole & Associates, LLC

CLIENT SBPG COMPUTED BY McGoey, William

PROJECT NO 2013-09 DATE 5/29/2014

CHECKED BY/DATE PAGE NO 1

OVERVIEW STATEMENT

Determine the diameter of the proposed force main connecting station VI-06 to VI-05. From the calculations regarding the algebraic sums of all lift station flow requirements, the flow rate this force main will handle is 1500 gpm (rounded up from the calculated 1740 gpm). The velocity in the force main should travel around +/- 5 ft./s.

REFERENCES

Cameron Hydraulic Data, "Frequently Used Formulas & Equivalents" pg. 2-13 (Q=VA and unit conversions)

ASSUMPTIONS

H. Davis Cole & Associates, LLC. (HDCA) assumed all upstream stations from VI-06 were pumping at capacity.

H. Davis Cole & Associates, LLC

CLIENT SBPG COMPUTED BY McGoey, William

PROJECT NO 2013-09 DATE 5/29/2014

CHECKED BY/DATE PAGE NO 2

CALCULATION FOR THE SIZING OF THE PROPOSED FORCEMAIN

$Q = VA$

Q = flow rate $ft.^3/s$

$V = ft./s$

$A = ft.^2$

$$Q = 1800\ gpm \left(\frac{0.002228\ ft.^3/s}{gpm} \right) = 4.0104 \frac{ft.^3}{s}$$

$V = 5\ ft/s$ (controlling factor)

$A = ?$

$$\left[A = \frac{Q}{V} = \frac{4.0104\ ft.^3/s}{5\ ft./s} = 0.80208\ ft.^2 \right]$$

$$A = \frac{\pi}{4} D^2$$

D = diameter = ?

$$\left[D = \sqrt{\frac{4A}{\pi}} = \left[\frac{4(0.80208\ ft.^2)}{\pi} \right]^{1/2} = 1.01\ ft \left(\frac{12\ in}{1\ ft} \right) = 12.13\ in. \right]$$

H. Davis Cole & Associates, LLC

CLIENT SBPG COMPUTED BY D. MARTIN

PROJECT NO 2013-09 DATE 06/17/14

CHECKED BY/DATE PAGE NO 1

DETERMINE PUMP POWER REQUIREMENTS FOR MODIFICATIONS TO PUMP STATIONS VI-06, VI-05, VI-17, AND VIOLET TRANSFER STATION.

DETERMINE REQD ADDITIONAL STORAGE IF NECESSARY FOR 12 STARTS PER HOUR.

REFERENCES

- CAMERON HYDRAULIC DATA - 19TH EDITION

H. Davis Cole & Associates, LLC

CLIENT SBPG COMPUTED BY D. MARTIN

PROJECT NO 2013-09 DATE 06/17/14

CHECKED BY/DATE PRELIMINARY PAGE NO 2

SYSTEM CURVE AND PUMP SELECTION FOR PROPOSED FORCE MAIN FROM VI-06 TO VI-05.

- FORCE MAIN LENGTH ESTIMATED UTILIZING GOOGLE EARTH

- SEE ATTACHED SPREADSHEET FOR SYSTEM CURVE DEVELOPMENT

1) RECOMMENDED PUMP CAPACITY CALCULATION

Wet Well Width (Enter 0 for Circular Wet Well)	6.5
Wet Well Width (Enter 0 for Circular Wet Well)	6.5
Wet Well Diameter (Enter 0 for Square Wet Well)	0
Top of Water Elevation	16.42
Bottom of Wet Well Elevation	13.42
Depth of Wet Well	3
No. of Pumps in Station	2
Wet Well Volume (Cubic Feet)	127
Wet Well Volume (Gallons)	948
Minimum Pump Cycling Time (Minutes)	5
Maximum Pump Capacity (Gallons Per Minute)	758
Maximum Pump Capacity (Cubic Feet Per Second)	101
Recommended Pump Capacity (Gallons Per Minute)	1860
Actual Pump Cycle Time @ Recommended Pump Capacity (Minutes)	2
No. Pump Starts per Hour per Pump @ Recommended Pump Capacity	15.0

The above calculations are based on the worst-case scenario for pump cycle time, which occurs when the inflow into the pump stations equals 50% of the pump capacity. This condition produces with shortest pump cycle time which is the most important design criteria with respect to the pump itself. The recommended pump capacity is "per pump" and was derived using best engineering judgement considering the pump cycle time and force main velocities. These parameters are somewhat constrained given that the force main size (diameter) is fixed and the wet well size and available storage capacity as also fixed. The recommended pump capacity was derived by balancing force main velocity with pump cycle times based on these given conditions. It is important to understand that the force main velocity shown is with one pump operating, and will increase at least daily with peak flow when at least two pumps are operating. Therefore, the force main velocity shown is a minimum value.

2) STATIC HEAD CALCULATION

			Remarks
Suction Side Static Head Elevation =	13.92	Feet	From Montgomery-Watson
Discharge Side Static Head Elevation =	21.13	Feet	From Montgomery-Watson, discharge side set 4' below force main cover
Total Static Head =	7.21	Feet	

2A) DESIRED FLOW AND VELOCITY (2.0<V,FPS<7.0)

Desired Flow, GPM	1860
Desired Flow, CFS	4.1478
Desired Flow, MGD	2.6784

Trial Force Main Sizes (in)	6	8	10	12	16
Velocity, FPS	21.14	11.89	7.61	5.28	2.97

3) SYSTEM CURVE CALCULATION

Fitting No.	Type	Diameter (in)	Equiv Length in Straight Pipe	Material	"C" Value	HW Sum	Remarks
1	Pump Entrance						Discharge Manifold
2	Base Elbow						Discharge Manifold
3	Pipe Spool						Discharge Manifold
4	Check Valve						Discharge Manifold
5	Plug Valve						Discharge Manifold
6	Standard Tee - Branch						Discharge Manifold
7	Sudden Enlargement						Discharge Manifold
8	Sudden Enlargement						Discharge Manifold
9	Discharge Manifold	8	200.00	DI	130	1.035E-05	Discharge Manifold
10	Force Main	12	4270.29	HDPE	140	2.6795E-05	Force Main
11	45 Deg Elbow	12	15.90	DI	130	1.14429E-07	Force Main
12	Force Main	12	29.94	HDPE	140	1.87866E-07	Force Main
13	45 Deg Elbow	12	15.90	DI	130	1.14429E-07	Force Main
14	Force Main	12	65.13	HDPE	140	4.08674E-07	Force Main
15	45 Deg Elbow	12	15.90	DI	130	1.14429E-07	Force Main
16	Force Main	12	29.19	HDPE	140	1.8316E-07	Force Main
17	45 Deg Elbow	12	15.90	DI	130	1.14429E-07	Force Main
18	Force Main	12	41.31	HDPE	140	2.5921E-07	Force Main
19	Ordinary Exit	12	17.50	HDPE	140	1.09808E-07	Force Main
20							
21							
22							
23							
24							
25							
26							
27							
28							
29							
30							
31							
32							
33							
34							
35							
36							

HAZEN WILLIAMS EQN SUM MODIFIER 3.87514E-05

4916.96

4

3) SYSTEM CURVE CALCULATION (Continued)							
Fitting No.	Type	Diameter (in)	Equiv Length in Straight Pipe	Material	"C" Value	HW Sum	Remarks
37							
38							
39							
40							
41							
42							
43							
44							
45							
46							
47							
48							
49							
50							
51							
52							
53							
54							
55							
56							
57							
58							
59							
60							
61							
62							
63							
64							
65							
66							
67							
68							
69							
70							
71							
72							

HAZEN WILLIAMS EQN SUM MODIFIER 0
Sum of Modifiers 3.87514E-05

3) SYSTEM CURVE CALCULATION (Continued)

Flow, GPM	Static Head (ft)	Friction Head (ft, HW)	TDH (ft)	Flow, MGD	Flow, CFS
0	7.21	0.00	7.21	0.00	0.00
150	7.21	0.41	7.62	0.22	0.33
300	7.21	1.48	8.69	0.43	0.67
450	7.21	3.14	10.35	0.65	1.00
600	7.21	5.34	12.55	0.86	1.34
750	7.21	8.08	15.29	1.08	1.67
900	7.21	11.31	18.52	1.30	2.01
1050	7.21	15.05	22.26	1.51	2.34
1200	7.21	19.27	26.48	1.73	2.68
1350	7.21	23.96	31.17	1.94	3.01
1500	7.21	29.11	36.32	2.16	3.35
1650	7.21	34.72	41.93	2.38	3.68
1850	7.21	42.91	50.12	2.66	4.13
1950	7.21	47.30	54.51	2.81	4.35
2100	7.21	54.25	61.46	3.02	4.68

4) PUMP CURVE AND PUMP CHARACTERISTICS

Pump Head (ft)	Flow w/ 1 Pump On (GPM)	Flow w/ 'x' Pumps On (GPM)	Flow w/ 'x' Pumps On (GPM)
No. On	1	2	

6

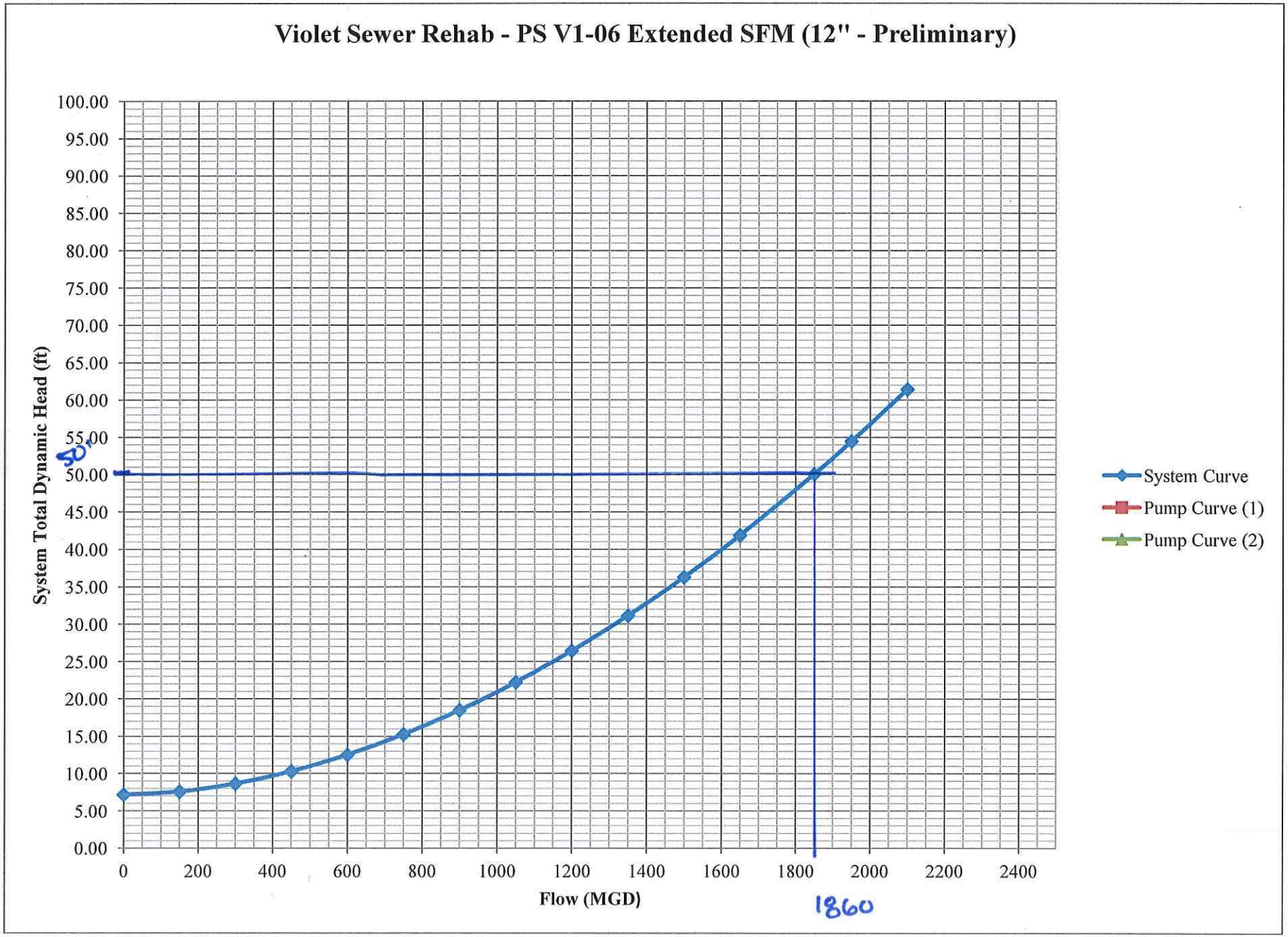
Violet Sewer Rehab - PS V1-06 Extended SFM (12" - Preliminary)
System Total Dynamic Head (ft)
100.00
95.00
90.00
85.00
80.00
75.00
70.00
65.00
60.00
55.00
50.00
45.00
40.00
35.00
30.00
25.00
20.00
15.00
10.00
5.00
0.00
50'
0
200
400
600
800
1000
1200
1400
1600
1800
2000
2200
2400
Flow (MGD)
1860
System Curve
Pump Curve (1)
Pump Curve (2)

NOTE:

1. PUMP STATION FEATURES SHOWN IN THIS DRAWING WERE DOCUMENTED FROM ABOVE GROUND FIELD OBSERVATIONS. FEATURES LOCATED BELOW GRADE WERE NOT VERIFIED FOR MATERIAL TYPE, SIZE OR GEOMETRY AND ARE SHOWN SCHEMATICALLY FOR REFERENCE ONLY.

2. FM DISCHARGES TO MANHOLE V170020, INVERT ELEVATION −3.74 AT ELBOW AND −10.14 AT END OF VERTICAL DROP.

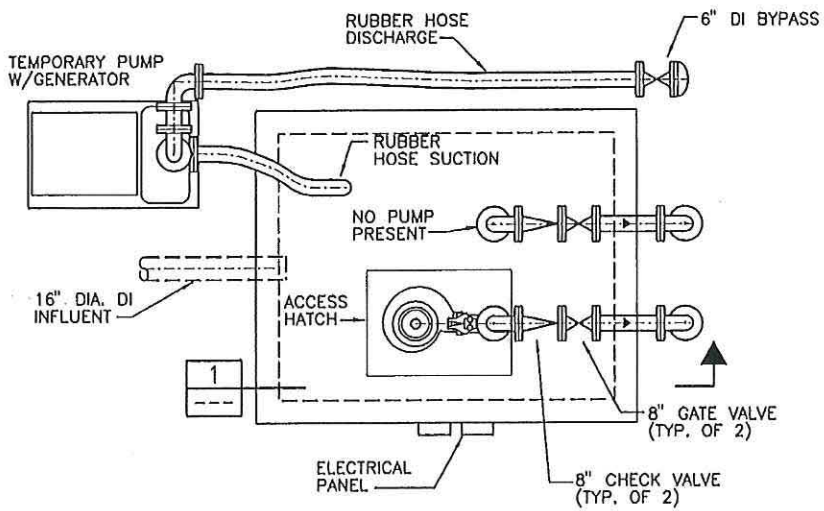

PLAN
SCALE:NONE

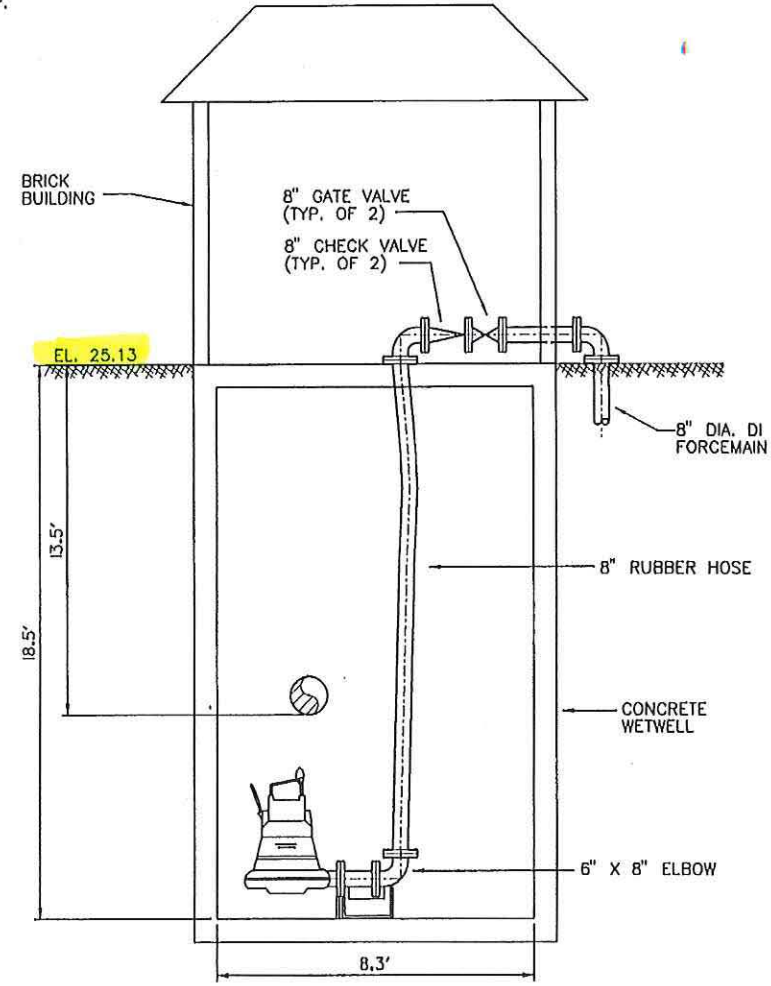

SECTION 1
SCALE: NONE

MONTGOMERY WATSON Metairie, Louisiana	ST. BERNARD PARISH – SANITARY SEWER OVERFLOW CONTROL PROGRAM PUMP STATION INVESTIGATION	PUMP STATION V1-05 HIGHLANDS-ST. BERNARD HWY. PLAN AND SECTION	FIGURE 2

NOTE:

1. PUMP STATION FEATURES SHOWN IN THIS DRAWING WERE DOCUMENTED FROM ABOVE GROUND FIELD OBSERVATIONS. FEATURES LOCATED BELOW GRADE WERE NOT VERIFIED FOR MATERIAL TYPE, SIZE OR GEOMETRY AND ARE SHOWN SCHEMATICALLY FOR REFERENCE ONLY.
2. FM DISCHARGES TO MANHOLE V080430, INVERT ELEVATION 0.49.

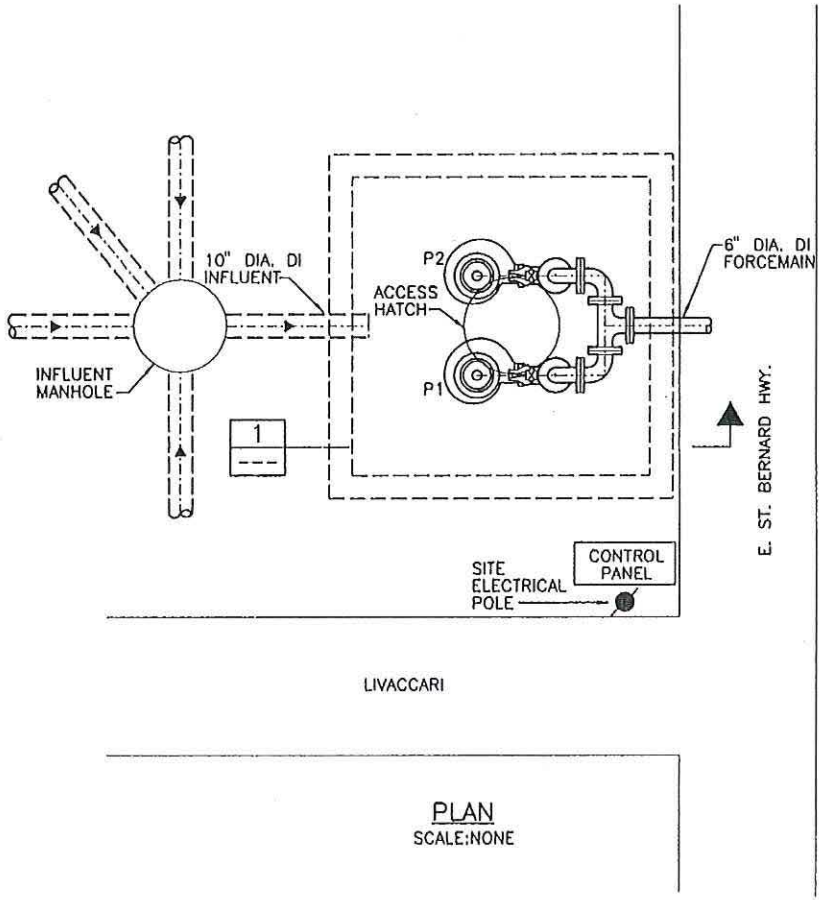

PLAN
SCALE:NONE

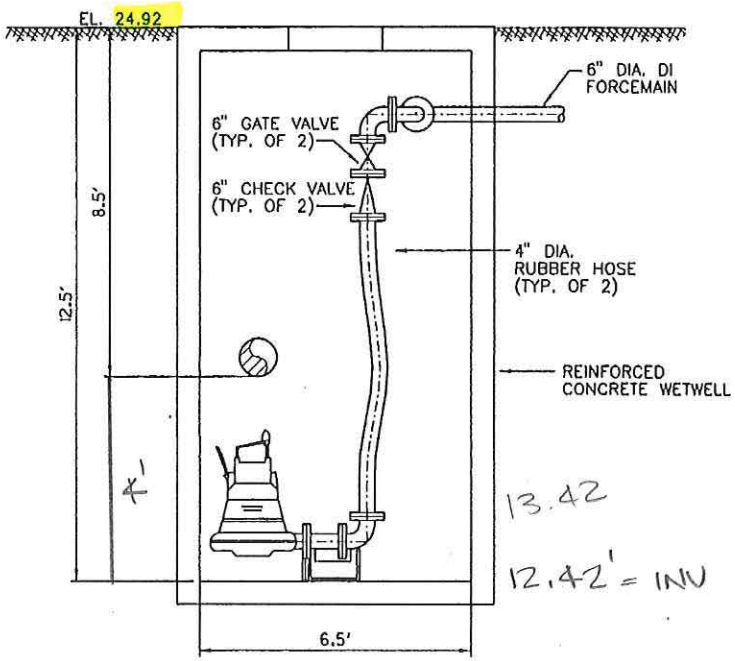

SECTION 1
SCALE: NONE

MONTGOMERY WATSON Metairie, Louisiana	ST. BERNARD PARISH – SANITARY SEWER OVERFLOW CONTROL PROGRAM PUMP STATION INVESTIGATION	PUMP STATION V1-06 ST. BERNARD–LIVACARRI PLAN AND SECTION	FIGURE 2

FROM SYSTEM CURVE, OPERATING POINT IS +/- 1860 GPM @ 50' TDH.

USING BHP EQN'S, CALC PUMP SIZE, ASSUMING 65% EFFICIENCY

$$BHP = \frac{FLOW \times HEAD}{3960 \times EFF}$$

$$= \frac{1,860 \times 50}{3960 \times 0.65} = 36 \text{ HP}$$

28 HP EXCEEDS THE 10 HP AVAILABLE, ∴ NEW PUMPS REQD. FAIRBANKS 6" 5434 PUMP @ 40HP WILL WORK - USE 40 HP FOR SELECTION. PER FAIRBANKS CUTS, 40 HP PUMP WILL FIT IN EXISTING WET WELL.

CALCULATE REQD STORAGE FOR 12 STARTS/HR @ PEAK FLOW

FD-4 EQN $V = \frac{tQ}{4}$

$$V = \frac{5(1860)}{4} = 2,325 \text{ GALLONS}$$

EXISTING STORAGE VOLUME = 948 Δ = 1,377 GAL

APPROX 1400 ADDITIONAL GALLONS WILL BE REQD.

EXISTING PUMPS @ V1-06

PARSON & SANDERSON, INC.

405 COMMERCE POINT
HARAHAN, LA 70123

DATE: JULY 22, 2008

JOB V1-06 ST BERNARD HWY – LIVACCARI PUMP STATION

ST BERNARD PARISH, LOUISIANA

CONTRACTOR BLD SERVICES

ENGINEER ENVIRONMENTAL ENGINEERING SERVICES, INC.

SERVICE RAW DOMESTIC SEWERAGE

PUMP DATA: TYPE SUBMERSIBLE NON-CLOG SIZE [illegible] SCHARGE

GPM 530 TDH 42 RPM 1750 CURVE PG. [illegible] MPEL. DIA. 8.0"

CONSTRUCTION: HYDROMATIC S4MX1000JC

- ☐ BRONZE FITTED
- ☐
- ☒ ALL IRON
- ☒ MECHANICAL S[illegible]
- ☐
- ☐ (DOUBLE) PACKED
- ☐

BASE:

- ☒ CAST IRON
- ☐ CHANNEL STEEL

DRIVE:

- ☐ [illegible]ECT
- [illegible]-BELT
- ☒ CLOSE COUPLED
- ☒ SUBMERSIBLE

SPECIAL REQUIREMENTS: [illegible]OLED MOTOR, 35' PUMP, POWER & SENSOR CORDS, S.S. FASTENERS, S.S. [illegible]HAFT, S.S. PUMP SHAFT SLEEVE, PERM. LUBRICATED BALL BEARINGS, M[illegible]OR OVER-TEMP SENSOR, MOISTURE SENSOR, S.S.WEAR RING, EPOXY SE[illegible]ORDS & NON-OVERLOADING EXPLOSION-PROOF MOTOR WITH [illegible]"H" INSULATION.

MOTOR DATA

MFR [illegible]ROMATIC HP 10 RPM 1750 FRAME N/A

[illegible] 3 CYCLE 60 VOLTS 240 ENCLOSURE X-PROOF

AUXILIARY EQUIPMENT

(2) 4" PUMPS W/35' CORDS, (2) 4" BASE 90° PUMP ELBOWS, (2) 4" PUMP SEAL FLANGES, (4) 2" S.S. PUMP GUIDE RAILS & BRACKETS, (2) S.S. PUMP LIFT CABLES, (1) ALUM H-20 PUMP W.W. ACCESS DOOR & FRAME WITH LIFTING SPRINGS, (1) S .S. CORD/CABLE HANGER

------ PLEASE VERIFY VOLTAGE, PHASE & POWER CORD LENGTH------

INTERNAL REVIEW DOCUMENT - DRAFT

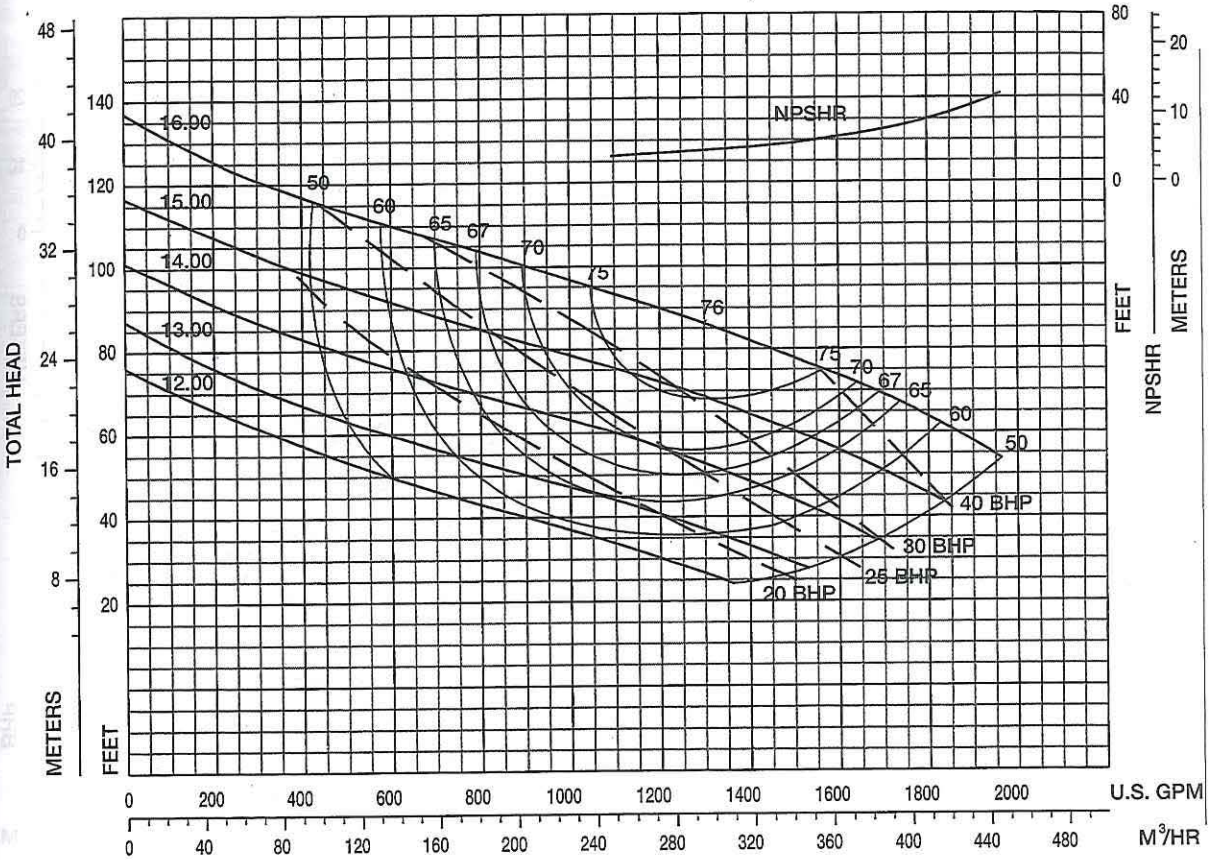

6" 5434
MTK, WK, WDK
SUBMERSIBLE

1180 RPM
TYPE K
BLADELESS

SUCTION SIZE
6"
(WDK: 6" OR 8")

IMPELLER
T6D1A

INLET AREA
36.42 SQ.IN.

MAX. SPHERE
4"

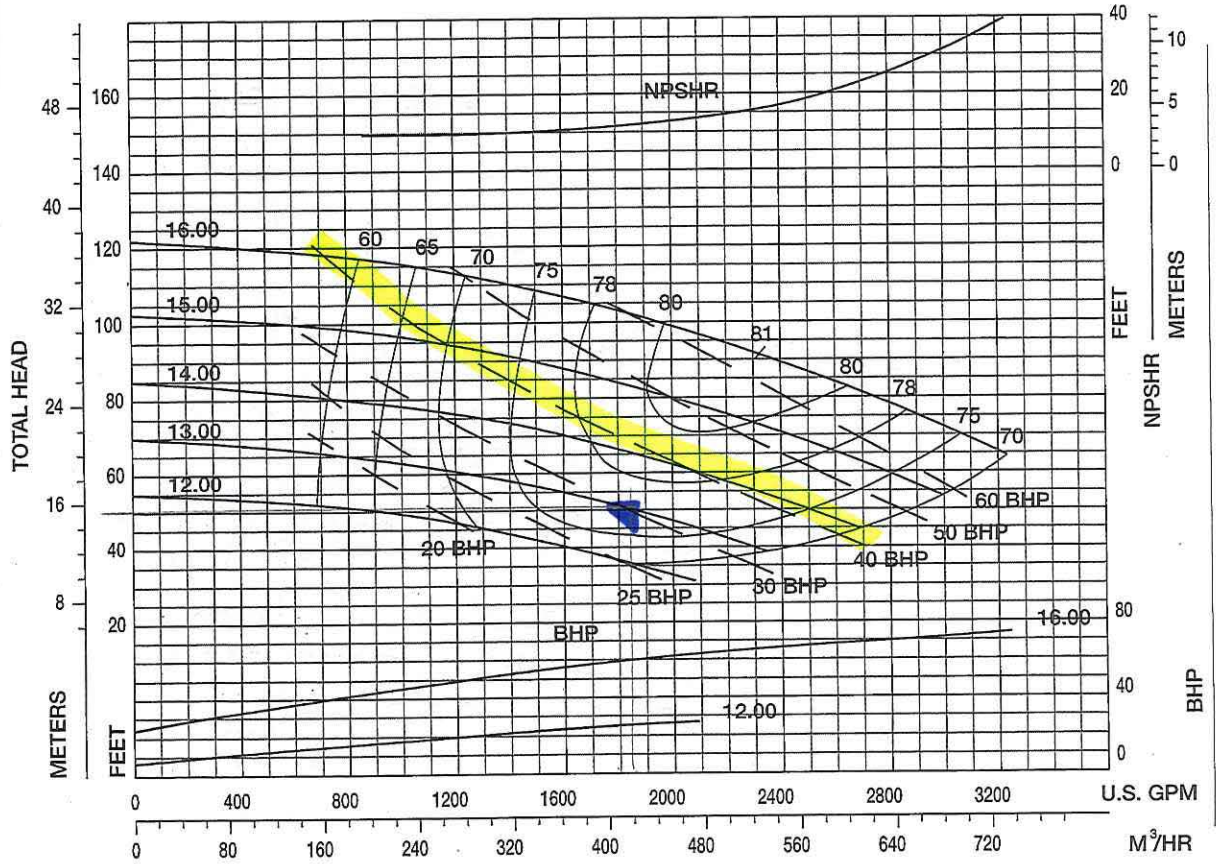

6" 5434
MT, W, WD
SUBMERSIBLE

1175 RPM

NO. OF VANES
3

SUCTION SIZE
6"
(WD: 6" OR 8")

IMPELLER
TAJC5BH

INLET AREA
60.58 SQ.IN.

MAX. SPHERE
3"

13

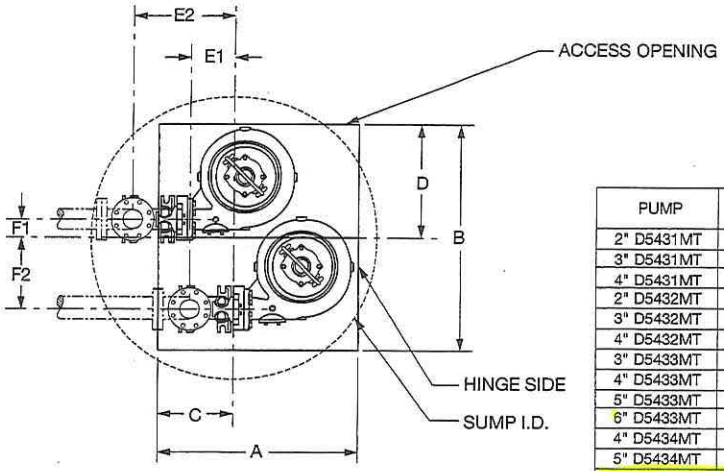

PLAN VIEW

PUMP	SUMP I.D.	A	B	C	D	E1	E2	F1	F
2" D5431MT	48	30	48	7	24	6	11	8	1
3" D5431MT	42	30	36	10	18	10	14	4	1
4" D5431MT	54	36	48	7	24	6	11	6	1
2" D5432MT	48	30	48	7	24	6	11	8	1
3" D5432MT	48	36	48	8	24	8	12	5	1
4" D5432MT	66	42	54	13	27	9	17	6	1
3" D5433MT	60	36	48	13	24	10	17	5	1
4" D5433MT	66	48	54	16	27	8	20	5	1
5" D5433MT	72	48	60	16¾	30	12	22	6	1
6" D5433MT	72	54	54	16¾	27	6	22	4	1
4" D5434MT	66	48	66	19	33	15	24	6	2
5" D5434MT	72	54	66	17¾	33	12	23	6	2
6" D5434MT	78	54	78	18¾	39	12	24	8	2
8" D5434SMT(2)	78	48	72	15½	36	13	22	9	2
8" D5434LMT(3)	84	60	84	21½	42	15	28	9	2
4" D5435MT	60	42	60	11	30	8	15	6	1
8" D5435MT	102	72	102	28½	51	16	35	8	3
10" D5435MT	114	84	102	31⅜	51	20	40	10	3
5" D5436MT	72	48	72	16¾	36	15	22	7	2
6" D5436MT	78	54	72	18¼	36	13	23½	7	2
6" D5436LMT	78	54	72	18¼	36	13	23½	7	2
8" D5436MT	102	72	102	28½	51	16	35	8	3
8" D5436SMT	84	66	72	25½	36	12	32	7	1

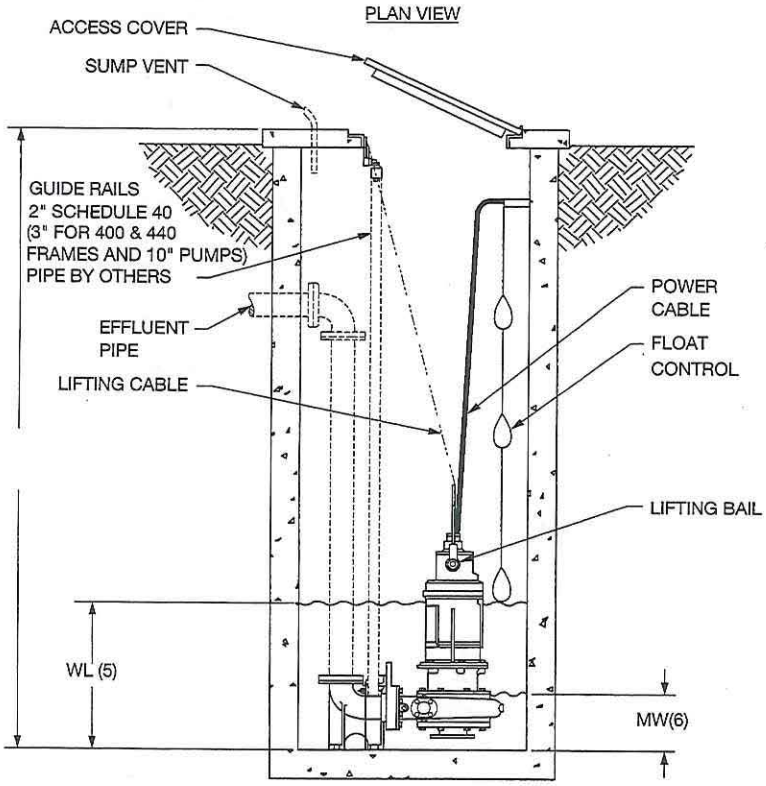

ELEVATION

400 & 440 FRAME PUMPS REQUIRING HEAVY DUTY ELBOWS									
PUMP	SUMP I.D.	A	B	C	D	E1	E2	F1	F
8" D5435MT	108	84	108	28⅝	54	16½	36	11	3
5" D5436MT	84	60	78	19	39	19	26⅝	9	2
6" D5436MT	90	66	78	20⅝	39	12	28	9	2
6" D5436LMT	90	60	84	18⅝	42	13	26	12	2
8" D5436MT	108	84	108	28⅝	54	16½	36	11	3
8" D5436SMT	90	54	84	21⅝	42	16½	29	9½	

NOTES:

(1) ALL DIMENSIONS ARE IN INCHES UNLESS NOTED.
(2) FOR USE WITH IMPELLER DESIGN T8D1A.
(3) FOR USE WITH IMPELLER DESIGNS T8D1D OR TAKC5W.
(4) 5400'S AND 5400K'S ARE DIMENSIONALLY IDENTICAL.
(5) RECOMMENDED LOW WATER LEVEL FOR CONTINUOUS OPERATION. 210 FRAME AND WATER JACKETED 250 THRU 440 FRAME UNITS CAN OPERATE CONTINUOUSLY AT "MW" WATER LEVEL.
(6) WATER LEVEL MAY BE DRAWN DOWN TO THIS LEVEL FOR SHORT TIME DUTY IN AIR MOTOR RATINGS. DRAW DOWN CAN OCCUR OVER A PERIOD OF 15 MINUTES.
(7) CLOCKWISE ROTATION SHOWN COUNTERCLOCKWISE IS AVAILABLE.
(8) BASES ARE DESIGNED TO HAVE FULL CONTACT WITH GROUT OR A SOLE PLATE GROUTED IN PLACE.
(9) NOT FOR CONSTRUCTION, INSTALLATION, OR APPLICATION PURPOSES UNLESS CERTIFIED. DIMENSIONS SHOWN MAY VARY DUE TO NORMAL MANUFACTURING TOLERANCES.
(10) CONTRACTOR IS RESPONSIBLE FOR MOUNTING SUPPORT F OFFSET GUIDE BRACKETS.
(11) REFER TO BASIC PUMP DIMENSION DRAWING FOR WL AND MW DIMENSIONS.

DUPLEX, D5430MT, SUBMERSIBLE PULL-UP DOUBLE DOOR ACCESS COVER

Fairbanks Morse Pu

DWG NO 543MS125 REV NO

H. Davis Cole & Associates, LLC

CLIENT SBPG
PROJECT NO
CHECKED BY/DATE

COMPUTED BY D. MARTIN
DATE 06/17/14
PAGE NO 14

SYSTEM CURVE AND PRELIMINARY PUMP SELECTION FOR PROPOSED FORCE MAIN FROM VI-05 TO "NEW" VI-20 (ALLO MUMPHREY) PUMP STATION

- FORCE MAIN LENGTH AND DISCHARGE ELEVATIONS ESTIMATED USING GOOGLE EARTH

- SEE ATTACHED SPREADSHEET FOR SYSTEM CURVE DEVELOPMENT

HDCA System Curve Calculation Sheet
V5.0 - Rev June 2014

1) RECOMMENDED PUMP CAPACITY CALCULATION

Wet Well Width (Enter 0 for Circular Wet Well)	8.3
Wet Well Width (Enter 0 for Circular Wet Well)	10
Wet Well Diameter (Enter 0 for Square Wet Well)	0
Top of Water Elevation	10.63
Bottom of Wet Well Elevation	6.63
Depth of Wet Well	4
No. of Pumps in Station	2
Wet Well Volume (Cubic Feet)	332
Wet Well Volume (Gallons)	2483
Minimum Pump Cycling Time (Minutes)	5
Maximum Pump Capacity (Gallons Per Minute)	1987
Maximum Pump Capacity (Cubic Feet Per Second)	266
Recommended Pump Capacity (Gallons Per Minute)	3275
Actual Pump Cycle Time @ Recommended Pump Capacity (Minutes)	3
No. Pump Starts per Hour per Pump @ Recommended Pump Capacity	10.0

The above calculations are based on the worst-case scenario for pump cycle time, which occurs when the inflow into the pump stations equals 50% of the pump capacity. This condition produces with shortest pump cycle time which is the most important design criteria with respect to the pump itself. The recommended pump capacity is "per pump" and was derived using best engineering judgement considering the pump cycle time and force main velocities. These parameters are somewhat constrained given that the force main size (diameter) is fixed and the wet well size and available storage capacity as also fixed. The recommended pump capacity was derived by balancing force main velocity with pump cycle times based on these given conditions. It is important to understand that the force main velocity shown is with one pump operating, and will increase at least daily with peak flow when at least two pumps are operating. Therefore, the force main velocity shown is a minimum value.

2) STATIC HEAD CALCULATION

			Remarks
Suction Side Static Head Elevation =	8.13	Feet	From Montgomery-Watson
Discharge Side Static Head Elevation =	18.43	Feet	Estimated from Google Earth V1-20
Total Static Head =	10.3	Feet	proposed location

2A) DESIRED FLOW AND VELOCITY (2.0<V,FPS<7.0)

Desired Flow, GPM	3275
Desired Flow, CFS	7.30325
Desired Flow, MGD	4.716

Trial Force Main Sizes (in)	10	12	16	20	24
Velocity, FPS	13.40	9.30	5.23	3.35	2.33

15

3) SYSTEM CURVE CALCULATION							
Fitting No.	Type	Diameter (in)	Equiv Length in Straight Pipe	Material	"C" Value	HW Sum	Remarks
1	Pump Entrance						Discharge Manifold
2	Base Elbow						Discharge Manifold
3	Pipe Spool						Discharge Manifold
4	Check Valve						Discharge Manifold
5	Plug Valve						Discharge Manifold
6	Standard Tee - Branch						Discharge Manifold
7	Sudden Enlargement						Discharge Manifold
8	Sudden Enlargement						Discharge Manifold
9	Discharge Manifold	10	200.00	DI	130	3.49481E-06	Discharge Manifold
10	Force Main	16	53.80	HDPE	140	8.32701E-08	Force Main
11	45 Deg Elbow	16	20.00	DI	130	3.55041E-08	Force Main
12	Force Main	16	14.50	HDPE	140	2.24427E-08	Force Main
13	45 Deg Elbow	16	20.00	DI	130	3.55041E-08	Force Main
14	Force Main	16	136.30	HDPE	140	2.10961E-07	Force Main
15	45 Deg Elbow	16	20.00	DI	130	3.55041E-08	Force Main
16	Force Main	16	659.00	HDPE	140	1.01998E-06	Force Main
17	45 Deg Elbow	16	20.00	DI	130	3.55041E-08	Force Main
18	Force Main	16	52.80	HDPE	140	8.17223E-08	Force Main
19	45 Deg Elbow	16	20.00	DI	130	3.55041E-08	Force Main
20	Force Main	16	49.00	HDPE	140	7.58408E-08	Force Main
21	45 Deg Elbow	16	20.00	DI	130	3.55041E-08	Force Main
22	Force Main	16	1035.00	HDPE	140	1.60194E-06	Force Main
23	Ordinary Exit	16	22.50	DI	130	3.99421E-08	Force Main
24							
25							
26							
27							
28							
29							
30							
31							
32							
33							
34							
35							
36							

HAZEN WILLIAMS EQN SUM MODIFIER 6.84394E-06

2542.90

3) SYSTEM CURVE CALCULATION (Continued)							
Fitting No.	Type	Diameter (in)	Equiv Length in Straight Pipe	Material	"C" Value	HW Sum	Remarks
37							
38							
39							
40							
41							
42							
43							
44							
45							
46							
47							
48							
49							
50							
51							
52							
53							
54							
55							
56							
57							
58							
59							
60							
61							
62							
63							
64							
65							
66							
67							
68							
69							
70							
71							
72							

HAZEN WILLIAMS EQN SUM MODIFIER 0
Sum of Modifiers 6.84394E-06

3) SYSTEM CURVE CALCULATION (Continued)

Flow, GPM	Static Head (ft)	Friction Head (ft, HW)	TDH (ft)	Flow, MGD	Flow, CFS
0	10.3	0.00	10.30	0.00	0.00
250	10.3	0.19	10.49	0.36	0.56
500	10.3	0.67	10.97	0.72	1.12
750	10.3	1.43	11.73	1.08	1.67
1000	10.3	2.43	12.73	1.44	2.23
1250	10.3	3.67	13.97	1.80	2.79
1500	10.3	5.14	15.44	2.16	3.35
2000	10.3	8.75	19.05	2.88	4.46
2250	10.3	10.89	21.19	3.24	5.02
2500	10.3	13.23	23.53	3.60	5.58
2750	10.3	15.78	26.08	3.96	6.13
3000	10.3	18.53	28.83	4.32	6.69
3250	10.3	21.49	31.79	4.68	7.25
3500	10.3	24.65	34.95	5.04	7.81
3750	10.3	28.01	38.31	5.40	8.36

4) PUMP CURVE AND PUMP CHARACTERISTICS

Pump Head (ft)	Flow w/ 1 Pump On (GPM)	Flow w/ 'x' Pumps On (GPM)	Flow w/ 'x' Pumps On (GPM)
No. On	1	2	

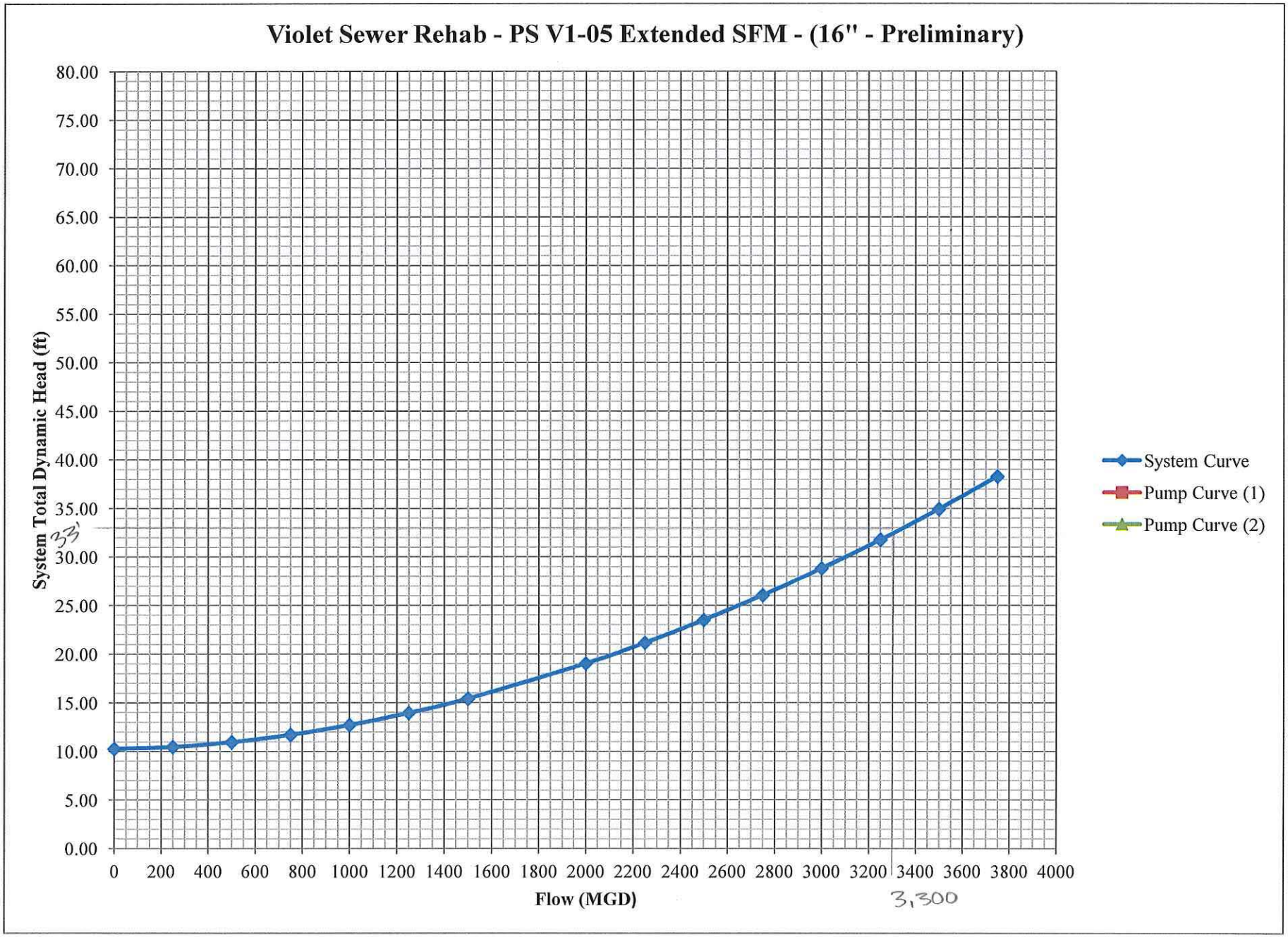
Violet Sewer Rehab - PS V1-05 Extended SFM - (16" - Preliminary)
System Total Dynamic Head (ft)
80.00
75.00
70.00
65.00
60.00
55.00
50.00
45.00
40.00
35.00
33'
30.00
25.00
20.00
15.00
10.00
5.00
0.00
0 200 400 600 800 1000 1200 1400 1600 1800 2000 2200 2400 2600 2800 3000 3200 3400 3600 3800 4000
Flow (MGD)
3,300
System Curve
Pump Curve (1)
Pump Curve (2)

FROM PRELIMINARY SYSTEM CURVE, OPERATING POINT IS +/- 3,300 GPM @ 33' TDH

USING BHP EQN'S, CALC PUMP SIZE, ASSUMING 65% EFFICIENCY

$$BHP = \frac{3,300\,(33)}{3960\,(0.65)} = 42\ HP = 50$$

EXCEEDS AVAILABLE - REQUIRES NEW PUMPS. FAIRBANKS 8" PUMP IS CLOSEST SELECTION - REQS 102" DIAM SUMP - SUMP IS 10' X 8.3' = FEASIBLE FIT.

DETERMINE REQD STORAGE

$$V = \frac{tQ}{4} = \frac{5(3300)}{4} = 4,125\ GAL$$

STATION VI-05 CURRENTLY STORES 2,483. ∴ 1,642 ADDITIONAL GALLONS REQD.

8" 5435
MT, W, WD
SUBMERSIBLE

880 RPM

NO. OF VANES
2

SUCTION SIZE
8"
(WD: 8" OR 10")

IMPELLER
TAKE5N

INLET AREA
130.29 SQ.IN.

MAX. SPHERE
5"

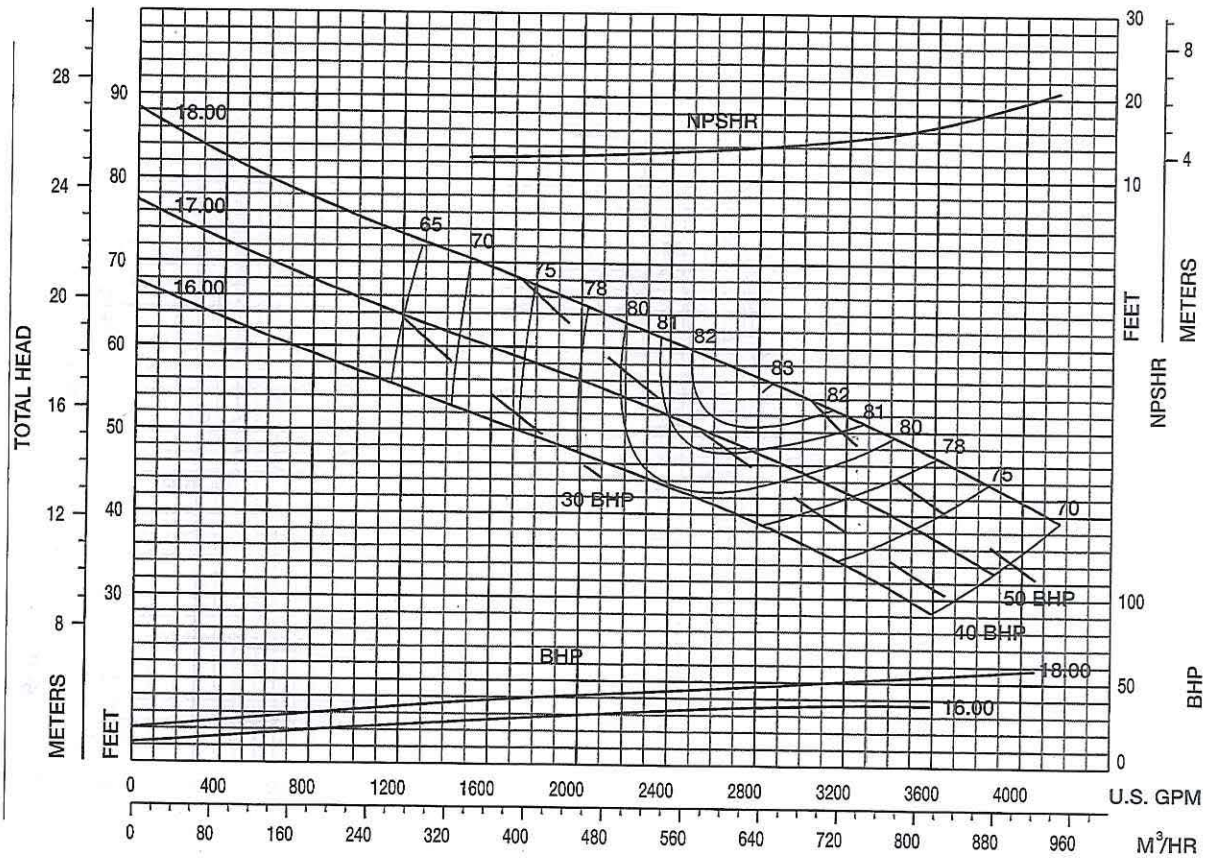

8" 5435
MV
SUBMERSIBLE

885 RPM

NO. OF VANES
2

SUCTION SIZE
8"

IMPELLER
TAKE5N

INLET AREA
130.29 SQ.IN.

MAX. SPHERE
5"

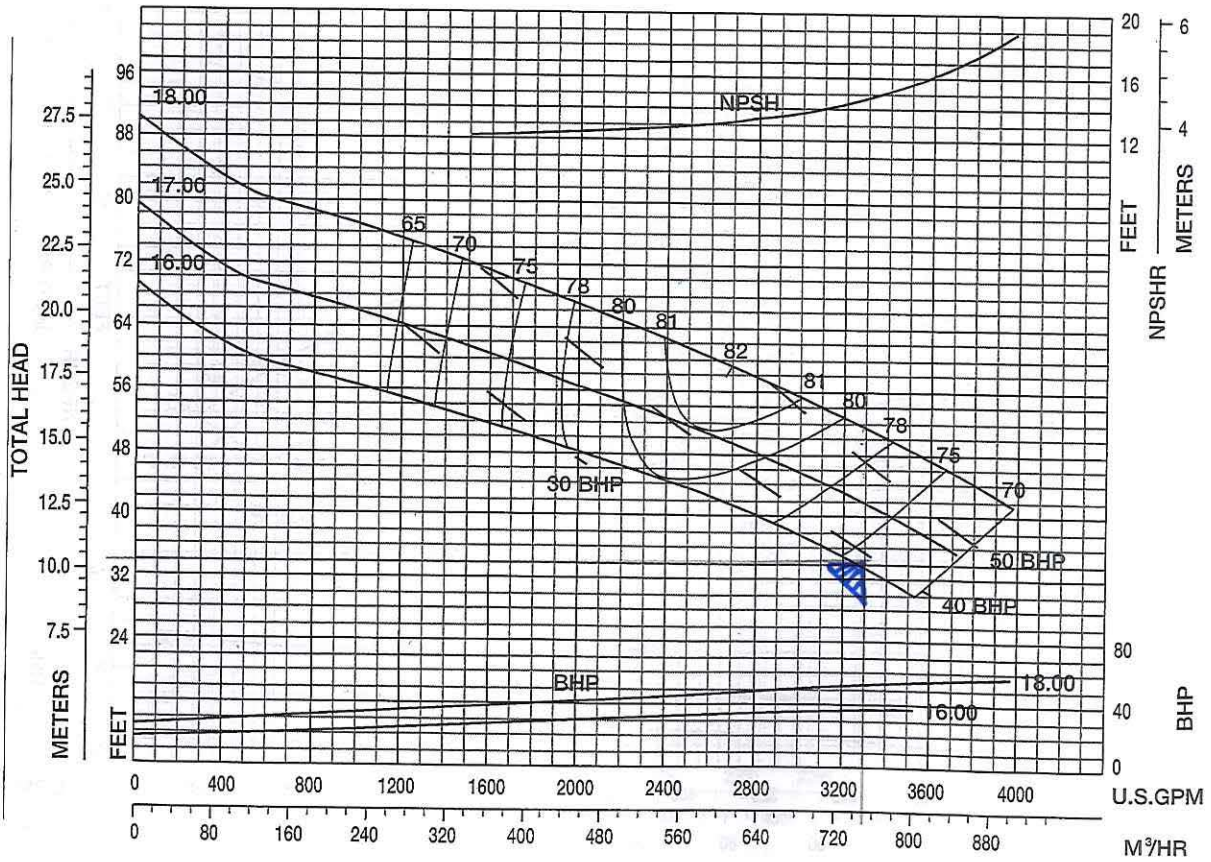

NOTE:

1. PUMP STATION FEATURES SHOWN IN THIS DRAWING WERE DOCUMENTED FROM ABOVE GROUND FIELD OBSERVATIONS. FEATURES LOCATED BELOW GRADE WERE NOT VERIFIED FOR MATERIAL TYPE, SIZE OR GEOMETRY AND ARE SHOWN SCHEMATICALLY FOR REFERENCE ONLY.
2. FM DISCHARGES TO MANHOLE V170020, INVERT ELEVATION −3.74 AT ELBOW AND −10.14 AT END OF VERTICAL DROP.

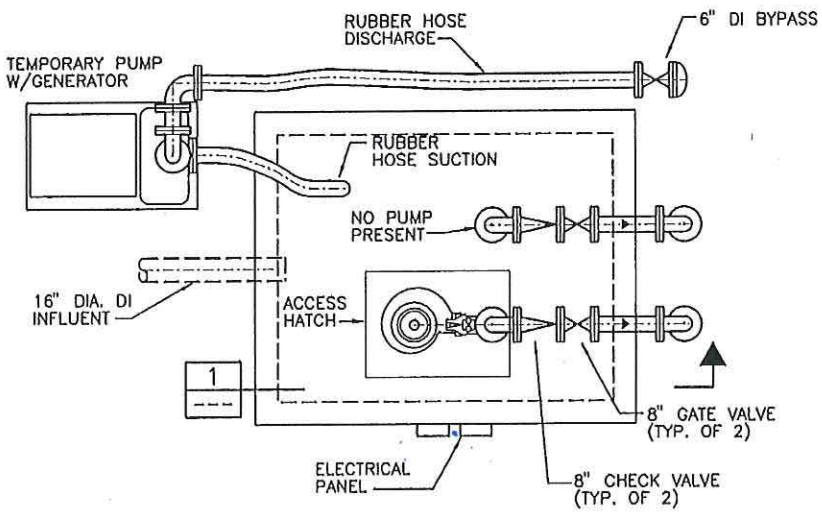

PLAN
SCALE:NONE

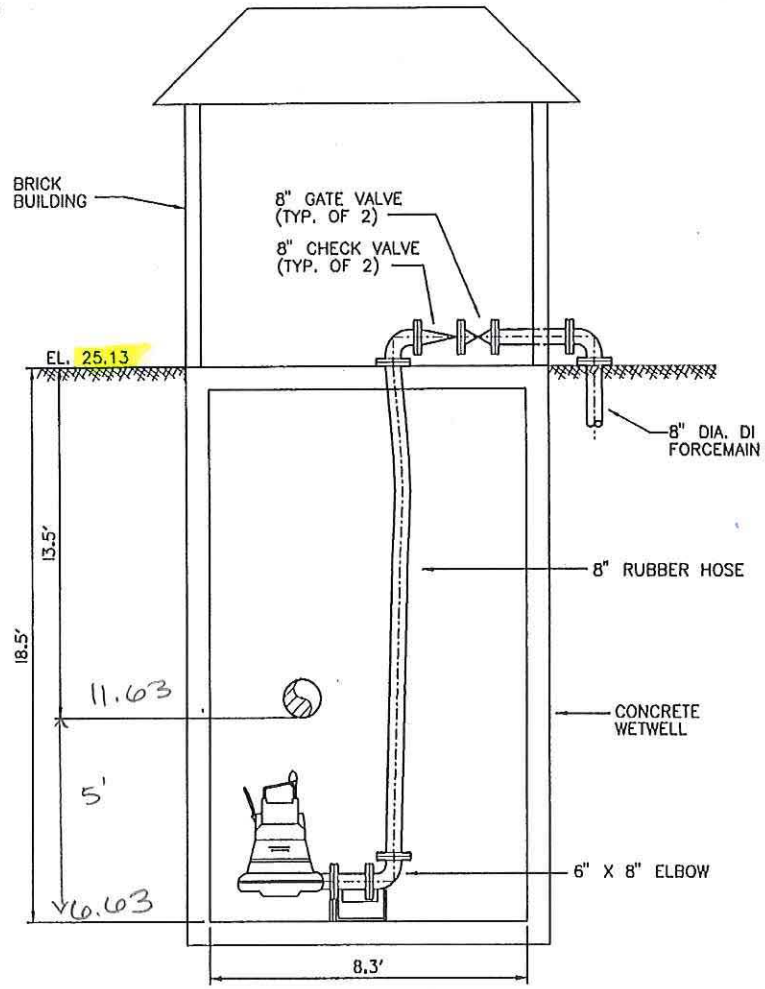

SECTION 1
SCALE: NONE

MONTGOMERY WATSON Metairie, Louisiana	ST. BERNARD PARISH – SANITARY SEWER OVERFLOW CONTROL PROGRAM PUMP STATION INVESTIGATION	PUMP STATION V1-05 HIGHLANDS-ST. BERNARD HWY. PLAN AND SECTION	FIGURE 2

23

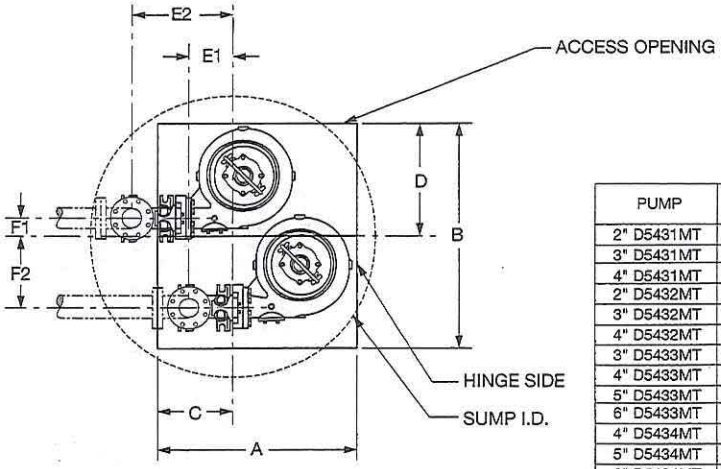

PLAN VIEW

PUMP	SUMP I.D.	A	B	C	D	E1	E2	F1	F2
2" D5431MT	48	30	48	7	24	6	11	8	12
3" D5431MT	42	30	36	10	18	10	14	4	11
4" D5431MT	54	36	48	7	24	6	11	6	14
2" D5432MT	48	30	48	7	24	6	11	8	12
3" D5432MT	48	36	48	8	24	8	12	5	13
4" D5432MT	66	42	54	13	27	9	17	6	15
3" D5433MT	60	36	48	13	24	10	17	5	14
4" D5433MT	66	48	54	16	27	8	20	5	16
5" D5433MT	72	48	60	16¾	30	12	22	6	17
6" D5433MT	72	54	54	16¾	27	6	22	4	16
4" D5434MT	66	48	66	19	33	15	24	6	20
5" D5434MT	72	54	66	17¾	33	12	23	6	21
6" D5434MT	78	54	78	18¾	39	12	24	8	21
8" D5434SMT(2)	78	48	72	15½	36	13	22	9	21
8" D5434LMT(3)	84	60	84	21½	42	15	28	9	24
4" D5435MT	60	42	60	11	30	8	15	6	18
8" D5435MT	102	72	102	28½	51	16	35	8	34
10" D5435MT	114	84	102	31⅜	51	20	40	10	30
5" D5436MT	72	48	72	16¾	36	15	22	7	21
6" D5436MT	78	54	72	18¼	36	13	23½	7	24
6" D5436LMT	78	54	72	18¼	36	13	23½	7	24
8" D5436MT	102	72	102	28½	51	16	35	8	34
8" D5436SMT	84	66	72	25½	36	12	32	7	18

400 & 440 FRAME PUMPS REQUIRING HEAVY DUTY ELBOWS									
PUMP	SUMP I.D.	A	B	C	D	E1	E2	F1	F2
8" D5435MT	108	84	108	28⅝	54	16½	36	11	30
5" D5436MT	84	60	78	19	39	19	26⅝	9	20
6" D5436MT	90	66	78	20⅝	39	12	28	9	20
6" D5436LMT	90	60	84	18⅝	42	13	26	12	22
8" D5436MT	108	84	108	28⅝	54	16½	36	11	30
8" D5436SMT	90	54	84	21⅝	42	16½	29	9½	

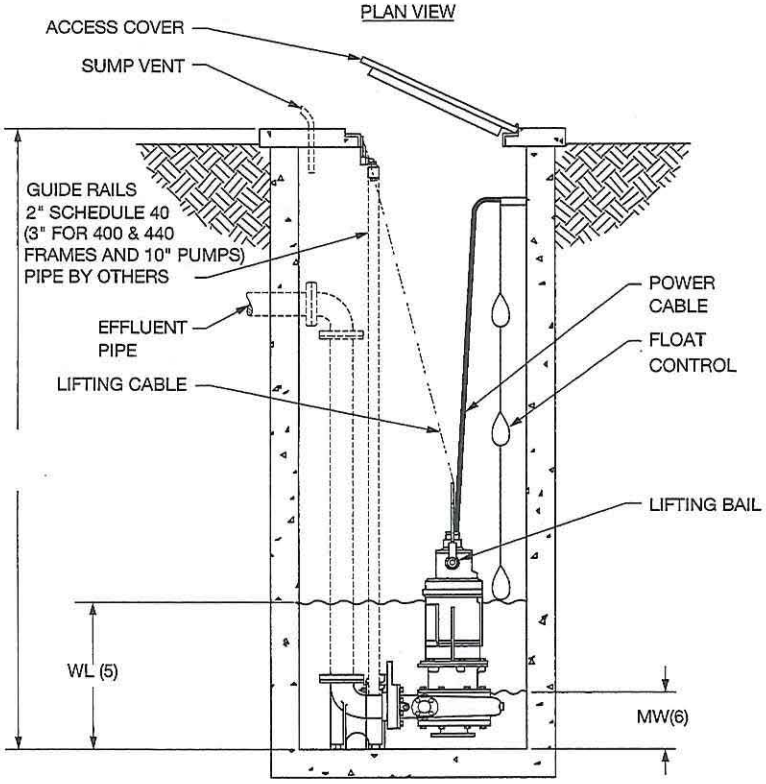

ELEVATION

NOTES:

(1) ALL DIMENSIONS ARE IN INCHES UNLESS NOTED.
(2) FOR USE WITH IMPELLER DESIGN T8D1A.
(3) FOR USE WITH IMPELLER DESIGNS T8D1D OR TAKC5W.
(4) 5400'S AND 5400K'S ARE DIMENSIONALLY IDENTICAL.
(5) RECOMMENDED LOW WATER LEVEL FOR CONTINUOUS OPERATION. 210 FRAME AND WATER JACKETED 250 THRU 440 FRAME UNITS CAN OPERATE CONTINUOUSLY AT "MW" WATER LEVEL.
(6) WATER LEVEL MAY BE DRAWN DOWN TO THIS LEVEL FOR SHORT TIME DUTY IN AIR MOTOR RATINGS. DRAW DOWN CAN OCCUR OVER A PERIOD OF 15 MINUTES.
(7) CLOCKWISE ROTATION SHOWN COUNTERCLOCKWISE IS AVAILABLE.
(8) BASES ARE DESIGNED TO HAVE FULL CONTACT WITH GROUT OR A SOLE PLATE GROUTED IN PLACE.
(9) NOT FOR CONSTRUCTION, INSTALLATION, OR APPLICATION PURPOSES UNLESS CERTIFIED. DIMENSIONS SHOWN MAY VARY DUE TO NORMAL MANUFACTURING TOLERANCES.
(10) CONTRACTOR IS RESPONSIBLE FOR MOUNTING SUPPORT FOR OFFSET GUIDE BRACKETS.
(11) REFER TO BASIC PUMP DIMENSION DRAWING FOR WL AND MW DIMENSIONS.

DUPLEX, D5430MT, SUBMERSIBLE PULL-UP
DOUBLE DOOR ACCESS COVER

Fairbanks Morse Pump

DWG NO 543MS125 REV NO 2

SYSTEM CURVE AND PRELIMINARY PUMP SELECTION FROM VI-17 TO VI-20 (ALLO HUMPHREY PUMP STATION)

- FORCE MAIN LENGTH AND DISCHARGE ELEVATIONS ESTIMATED USING GOOGLE EARTH

- SEE ATTACHED SPREADSHEET FOR SYSTEM CURVE DEVELOPMENT

1) RECOMMENDED PUMP CAPACITY CALCULATION

Wet Well Width (Enter 0 for Circular Wet Well)	0
Wet Well Width (Enter 0 for Circular Wet Well)	0
Wet Well Diameter (Enter 0 for Square Wet Well)	8.3
Top of Water Elevation	7.6
Bottom of Wet Well Elevation	4.75
Depth of Wet Well	3
No. of Pumps in Station	2
Wet Well Volume (Cubic Feet)	154
Wet Well Volume (Gallons)	1153
Minimum Pump Cycling Time (Minutes)	5
Maximum Pump Capacity (Gallons Per Minute)	922
Maximum Pump Capacity (Cubic Feet Per Second)	123
Recommended Pump Capacity (Gallons Per Minute)	850
Actual Pump Cycle Time @ Recommended Pump Capacity (Minutes)	5
No. Pump Starts per Hour per Pump @ Recommended Pump Capacity	6.0

The above calculations are based on the worst-case scenario for pump cycle time, which occurs when the inflow into the pump stations equals 50% of the pump capacity. This condition produces with shortest pump cycle time which is the most important design criteria with respect to the pump itself. The recommended pump capacity is "per pump" and was derived using best engineering judgement considering the pump cycle time and force main velocities. These parameters are somewhat constrained given that the force main size (diameter) is fixed and the wet well size and available storage capacity as also fixed. The recommended pump capacity was derived by balancing force main velocity with pump cycle times based on these given conditions. It is important to understand that the force main velocity shown is with one pump operating, and will increase at least daily with peak flow when at least two pumps are operating. Therefore, the force main velocity shown is a minimum value.

2) STATIC HEAD CALCULATION

			Remarks
Suction Side Static Head Elevation =	9.55	Feet	From Montgomery-Watson
Discharge Side Static Head Elevation =	18.43	Feet	Estimated from Google Earth V1-20
Total Static Head =	8.88	Feet	proposed location

2A) DESIRED FLOW AND VELOCITY (2.0<V,FPS<7.0)

Desired Flow, GPM	1300
Desired Flow, CFS	2.899
Desired Flow, MGD	1.872

Trial Force Main Sizes (in)	6	8	10	12	16
Velocity, FPS	14.77	8.31	5.32	3.69	2.08

25

3) SYSTEM CURVE CALCULATION

Fitting No.	Type	Diameter (in)	Equiv Length in Straight Pipe	Material	"C" Value	HW Sum	Remarks
1	Pump Entrance						
2	Base Elbow						
3	Pipe Spool						
4	Check Valve						
5	Plug Valve						
6	Standard Tee - Branch						
7	Sudden Enlargement						
8	Discharge Manifold	8	200.00	DI	130	1.035E-05	
9	Force Main	10	19.00	HDPE	140	2.89472E-07	Force Main
10	45 Deg Elbow	10	13.40	DI	130	2.34153E-07	Force Main
11	Force Main	10	94.70	HDPE	140	1.44279E-06	Force Main
12	45 Deg Elbow	10	13.40	DI	130	2.34153E-07	Force Main
13	Force Main	10	1398.00	HDPE	140	2.1299E-05	Force Main
14	45 Deg Elbow	10	13.40	DI	130	2.34153E-07	Force Main
15	Force Main	10	51.20	HDPE	140	7.8005E-07	Force Main
16	45 Deg Elbow	10	13.40	DI	130	2.34153E-07	Force Main
17	Force Main	10	170.00	HDPE	140	2.59001E-06	Force Main
18	45 Deg Elbow	10	13.40	DI	130	2.34153E-07	Force Main
19	Force Main	10	69.30	HDPE	140	1.05581E-06	Force Main
20	45 Deg Elbow	10	13.40	DI	130	2.34153E-07	Force Main
21	Force Main	10	342.30	HDPE	140	5.21506E-06	Force Main
22	45 Deg Elbow	10	13.40	DI	130	2.34153E-07	Force Main
23	Force Main	10	107.00	HDPE	140	1.63018E-06	Force Main
24	Long 90 Deg Elbow	10	25.00	DI	130	4.36852E-07	Force Main
25	Force Main	10	126.00	HDPE	140	1.91965E-06	Force Main
26	Ordinary Entrance	10	15.00	DI	130	2.62111E-07	Force Main
27							
28							
29							
30							
31							
32							
33							
34							
35							
36							

HAZEN WILLIAMS EQN SUM MODIFIER 4.89101E-05

2911.30

26

3) SYSTEM CURVE CALCULATION (Continued)							
Fitting No.	Type	Diameter (in)	Equiv Length in Straight Pipe	Material	"C" Value	HW Sum	Remarks
37							
38							
39							
40							
41							
42							
43							
44							
45							
46							
47							
48							
49							
50							
51							
52							
53							
54							
55							
56							
57							
58							
59							
60							
61							
62							
63							
64							
65							
66							
67							
68							
69							
70							
71							
72							

HAZEN WILLIAMS EQN SUM MODIFIER 0
Sum of Modifiers 4.89101E-05

27

3) SYSTEM CURVE CALCULATION (Continued)

Flow, GPM	Static Head (ft)	Friction Head (ft, HW)	TDH (ft)	Flow, MGD	Flow, CFS
0	8.88	0.00	8.88	0.00	0.00
150	8.88	0.52	9.40	0.22	0.33
300	8.88	1.87	10.75	0.43	0.67
450	8.88	3.96	12.84	0.65	1.00
600	8.88	6.74	15.62	0.86	1.34
750	8.88	10.19	19.07	1.08	1.67
900	8.88	14.28	23.16	1.30	2.01
1050	8.88	18.99	27.87	1.51	2.34
1200	8.88	24.32	33.20	1.73	2.68
1350	8.88	30.24	39.12	1.94	3.01
1500	8.88	36.74	45.62	2.16	3.35
1650	8.88	43.83	52.71	2.38	3.68
1800	8.88	51.48	60.36	2.59	4.01
1950	8.88	59.70	68.58	2.81	4.35
2100	8.88	68.47	77.35	3.02	4.68

4) PUMP CURVE AND PUMP CHARACTERISTICS

Pump Head (ft)	Flow w/ 1 Pump On (GPM)	Flow w/ 'x' Pumps On (GPM)	Flow w/ 'x' Pumps On (GPM)
No. On	1	2	

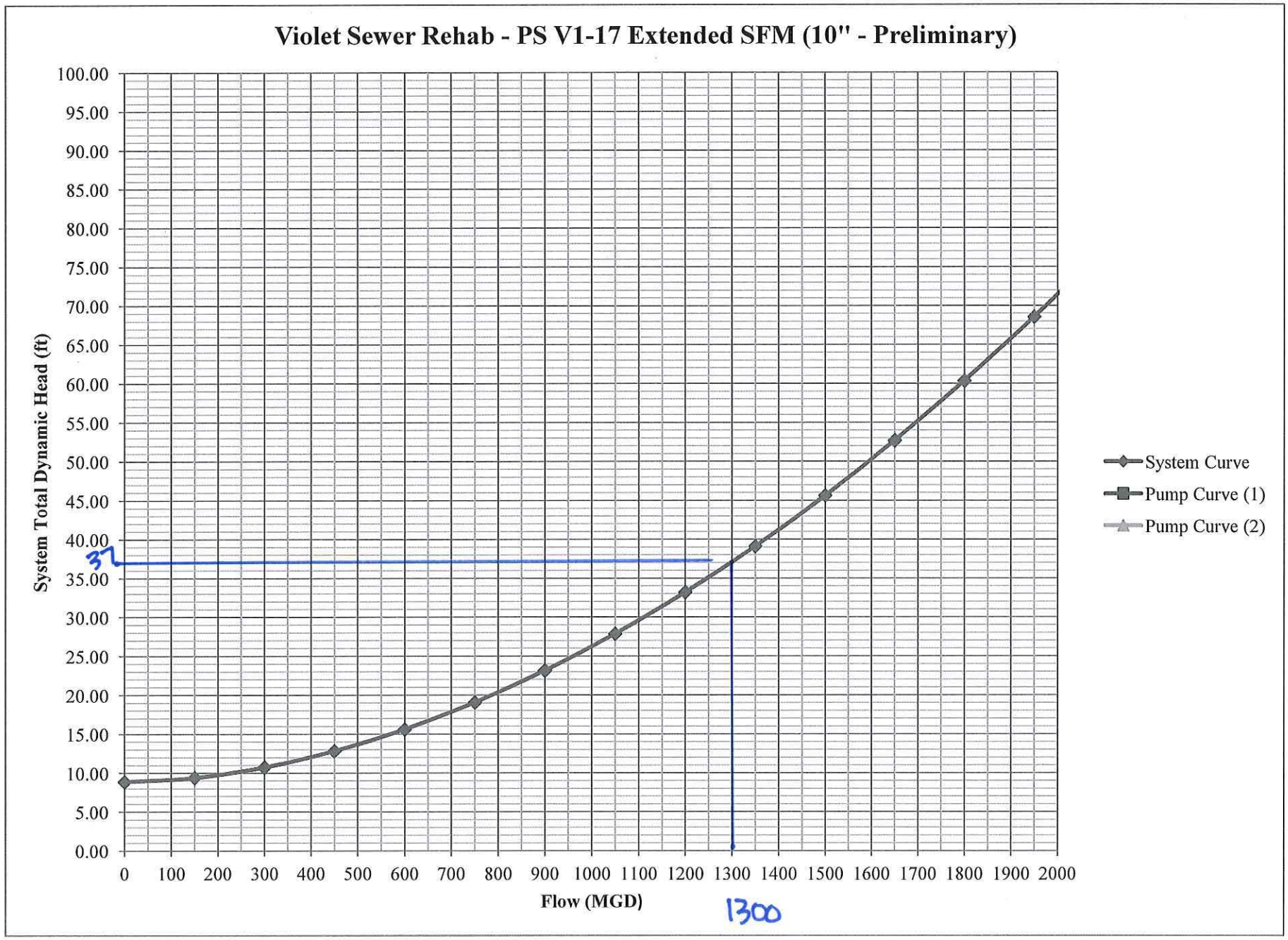
Violet Sewer Rehab - PS V1-17 Extended SFM (10" - Preliminary)
System Total Dynamic Head (ft)
100.00
95.00
90.00
85.00
80.00
75.00
70.00
65.00
60.00
55.00
50.00
45.00
40.00
35.00
30.00
25.00
20.00
15.00
10.00
5.00
0.00
37
0 100 200 300 400 500 600 700 800 900 1000 1100 1200 1300 1400 1500 1600 1700 1800 1900 2000
Flow (MGD)
1300
System Curve
Pump Curve (1)
Pump Curve (2)

NOTE:

1. PUMP STATION FEATURES SHOWN IN THIS DRAWING WERE DOCUMENTED FROM ABOVE GROUND FIELD OBSERVATIONS. FEATURES LOCATED BELOW GRADE WERE NOT VERIFIED FOR MATERIAL TYPE, SIZE OR GEOMETRY AND ARE SHOWN SCHEMATICALLY FOR REFERENCE ONLY.
2. FM DISCHARGES TO MANHOLE V080380, INVERT ELEVATION -1.59.

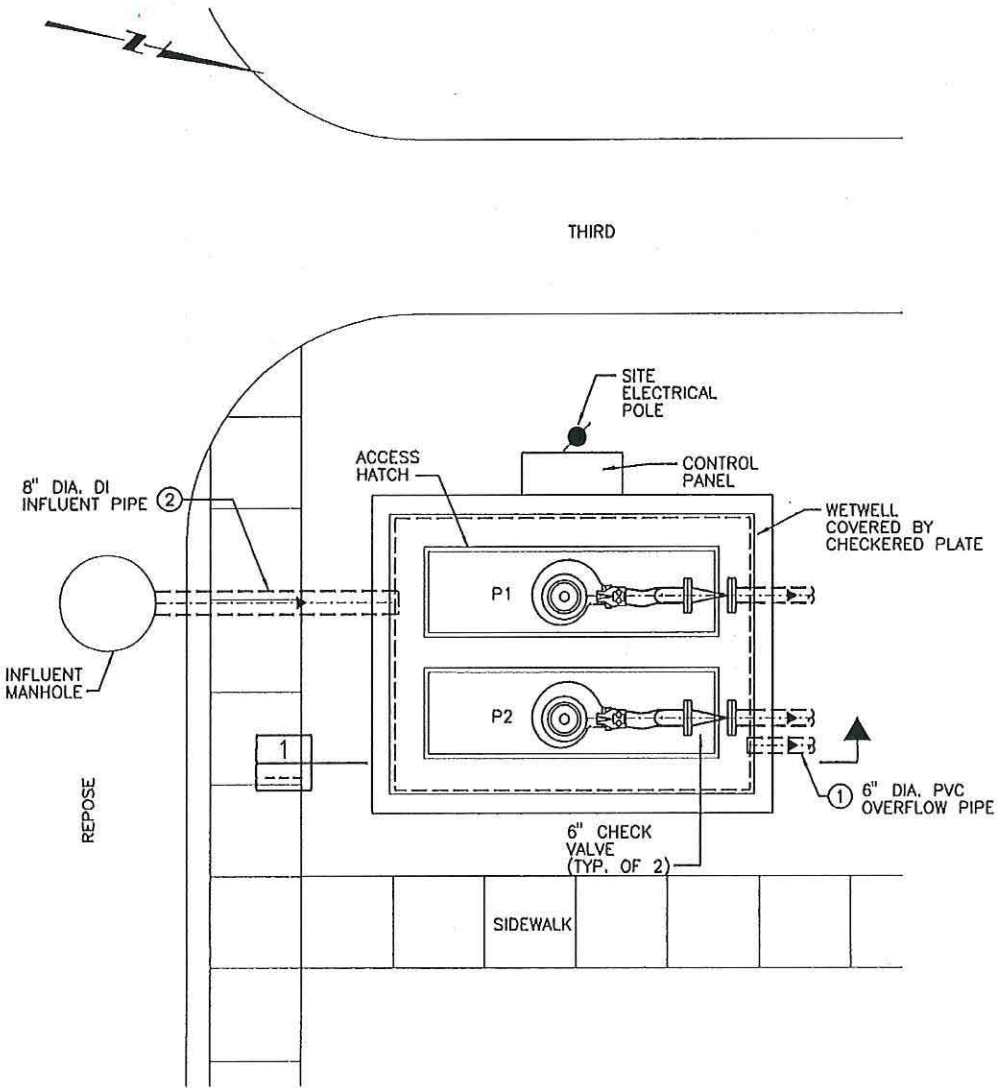

PLAN
SCALE:NONE

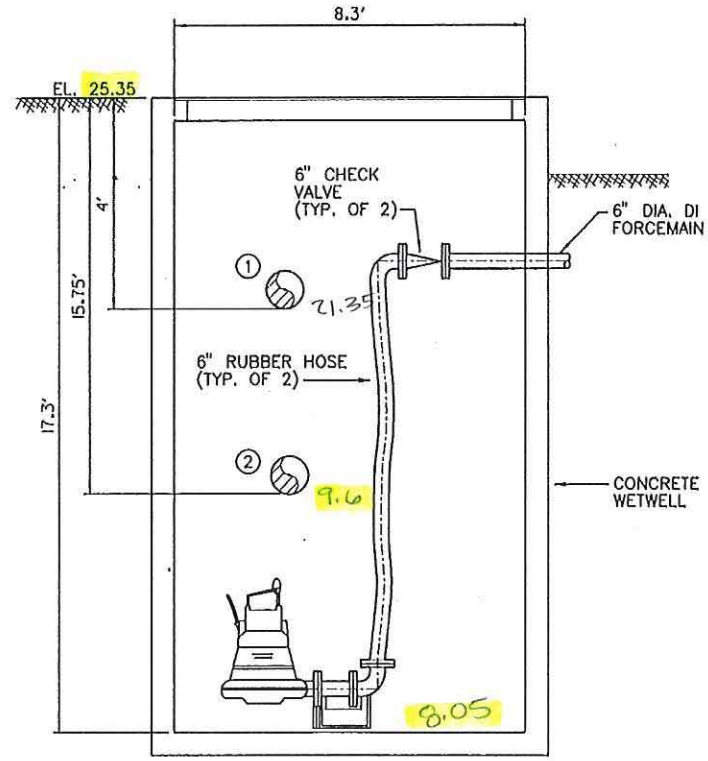

SECTION 1
SCALE: NONE

MONTGOMERY WATSON Metairie, Louisiana	ST. BERNARD PARISH – SANITARY SEWER OVERFLOW CONTROL PROGRAM PUMP STATION INVESTIGATION	PUMP STATION V1-17 THIRD-REPOSE PLAN AND SECTION	FIGURE 2

FROM PRELIMINARY SYSTEM CURVE, OPERATING POINT IS +/- 1300 GPM @ 36' TDH

USING BHP EQUATIONS, CALC PUMP SIZE, ASSUMING 65% EFFICIENCY

$$BHP = \frac{1{,}300(36)}{3960\,(0.65)} = 18 = 20\ HP$$

EXCEEDS 15 HP AVAILABLE. REQUIRES NEW PUMPS. FAIRBANKS OFFERS 6" PUMP (5434) WHICH PROVIDES GOOD HYDRAULIC FIT. REQD SUMP DIAMETER = 78" — WILL FIT IN EXISTING SUMP

CALC REQD STORAGE

$$V = \frac{tQ}{4} = \frac{5}{4}(1{,}300) = 1{,}625$$

AVAIL. = 373 = ADD. 1,252 REQD

NOTE OPERATING RANGE IN THIS STATION IS VERY SHALLOW AND THIS IMPLIES STATION OPERATES SURCHARGED DEEPENING OF WET WELL IS POSSIBLY WARRANTED

33

6" 5434
MT, W, WD
SUBMERSIBLE

880 RPM

NO. OF VANES
2

SUCTION SIZE
6"
(WD: 6" OR 8")

IMPELLER
TAJC5DC

INLET AREA
70.85 SQ.IN.

MAX. SPHERE
4"

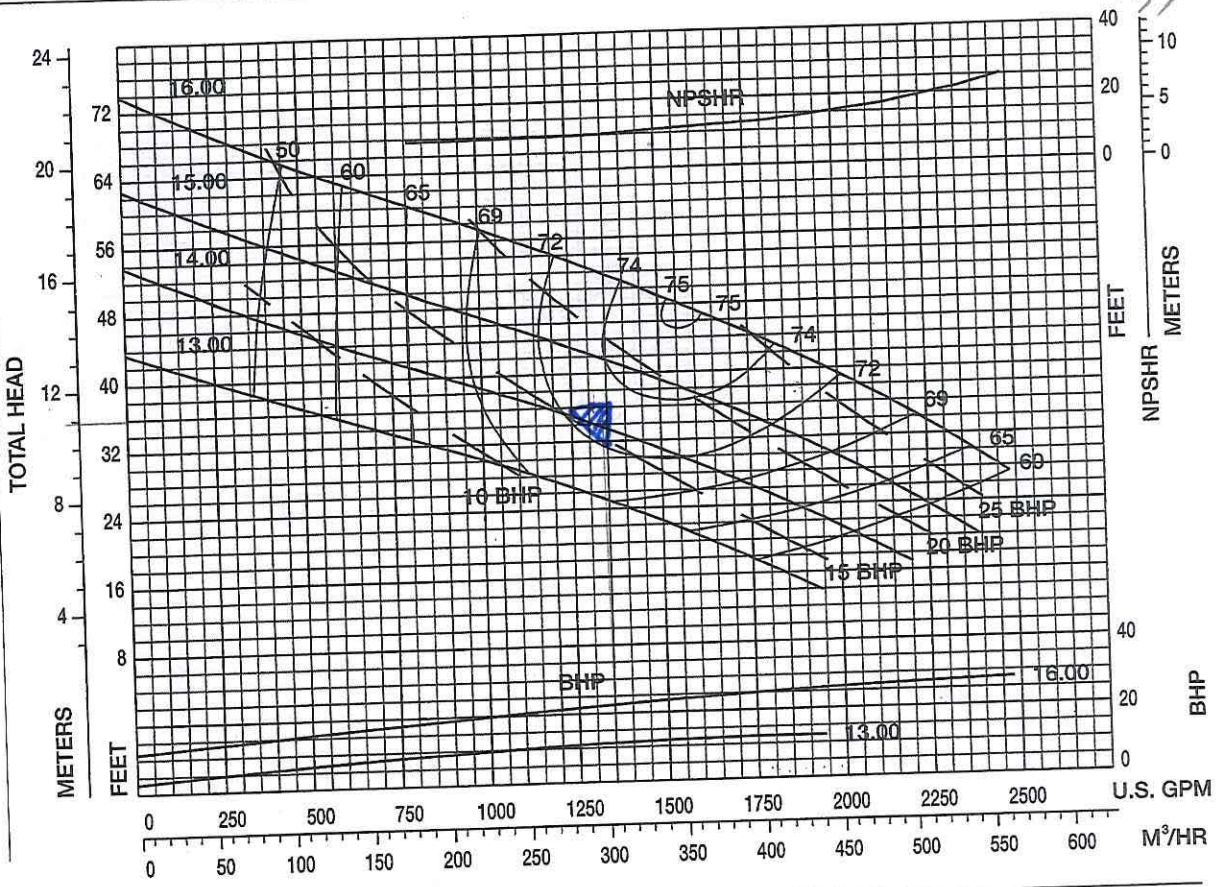

6" 5434
MT, W, WD
SUBMERSIBLE

865 RPM

NO. OF VANES
3

SUCTION SIZE
6"
(WD: 6" OR 8")

IMPELLER
TAJC5BJ

INLET AREA
64.55 SQ.IN.

MAX. SPHERE
3"

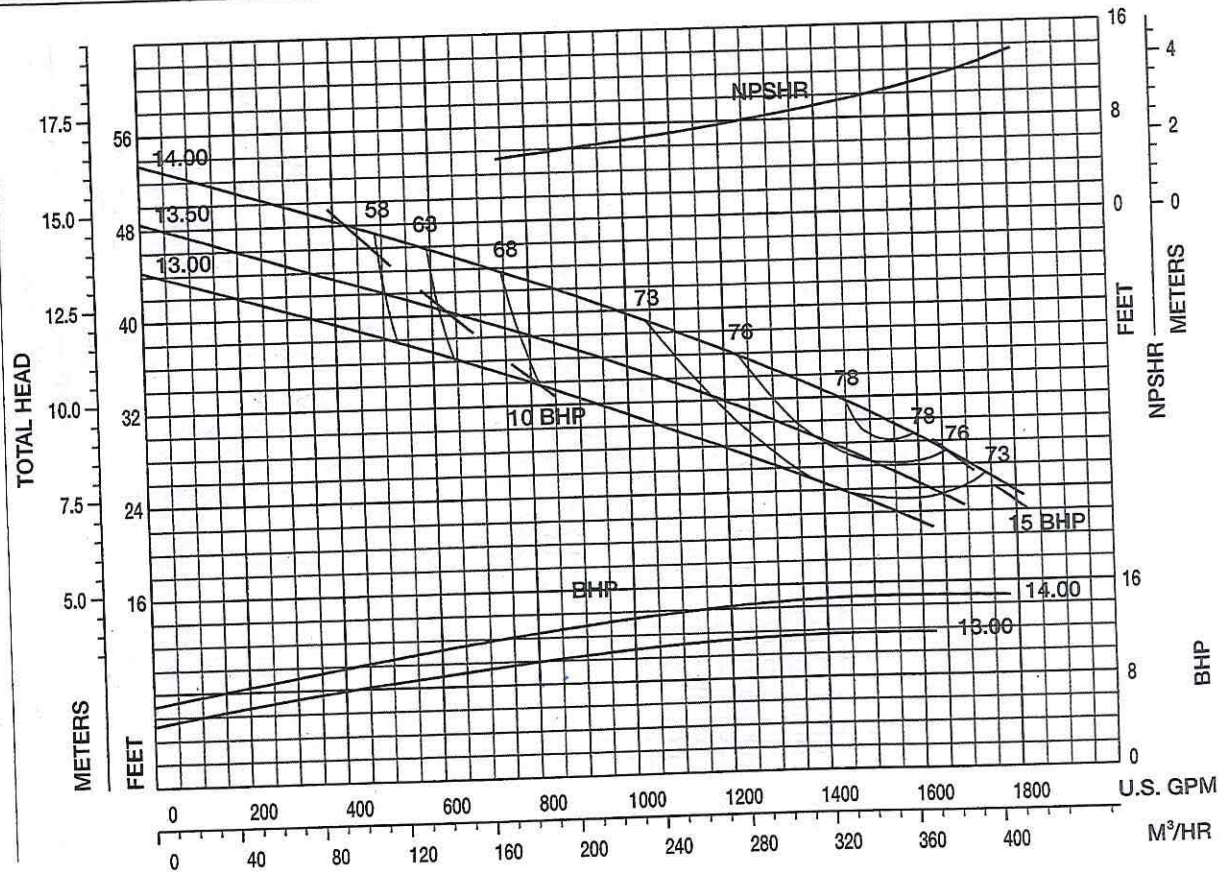

34

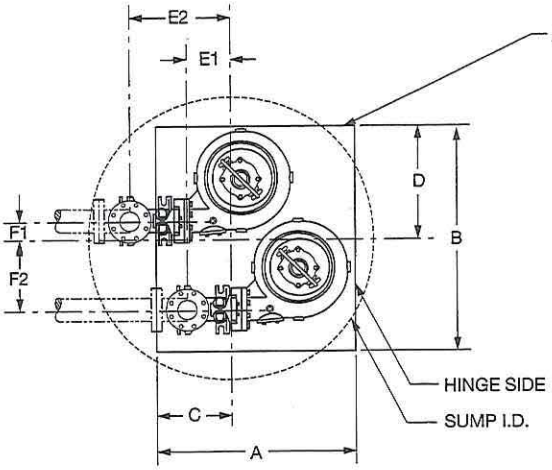

PLAN VIEW

PUMP	SUMP I.D.	A	B	C	D	E1	E2	F1	F2
2" D5431MT	48	30	48	7	24	6	11	8	12
3" D5431MT	42	30	36	10	18	10	14	4	11
4" D5431MT	54	36	48	7	24	6	11	6	14
2" D5432MT	48	30	48	7	24	6	11	8	12
3" D5432MT	48	36	48	8	24	8	12	5	13
4" D5432MT	66	42	54	13	27	9	17	6	15
3" D5433MT	60	36	48	13	24	10	17	5	14
4" D5433MT	66	48	54	16	27	8	20	5	16
5" D5433MT	72	48	60	16¾	30	12	22	6	17
6" D5433MT	72	54	54	16¾	27	6	22	4	16
4" D5434MT	66	48	66	19	33	15	24	6	20
5" D5434MT	72	54	66	17¾	33	12	23	6	21
6" D5434MT	78	54	78	18¾	39	12	24	8	21
8" D5434SMT(2)	78	48	72	15½	36	13	22	9	21
8" D5434LMT(3)	84	60	84	21½	42	15	28	9	24
4" D5435MT	60	42	60	11	30	8	15	6	18
8" D5435MT	102	72	102	28½	51	16	35	8	34
10" D5435MT	114	84	102	31⅜	51	20	40	10	30
5" D5436MT	72	48	72	16¾	36	15	22	7	21
6" D5436MT	78	54	72	18¼	36	13	23½	7	24
6" D5436LMT	78	54	72	18¼	36	13	23½	7	24
8" D5436MT	102	72	102	28½	51	16	35	8	34
8" D5436SMT	84	66	72	25½	36	12	32	7	18

400 & 440 FRAME PUMPS REQUIRING HEAVY DUTY ELBOWS									
PUMP	SUMP I.D.	A	B	C	D	E1	E2	F1	F2
8" D5435MT	108	84	108	28⅝	54	16½	36	11	30
5" D5436MT	84	60	78	19	39	19	26⅛	9	20
6" D5436MT	90	66	78	20⅝	39	12	28	9	20
6" D5436LMT	90	60	84	18⅝	42	13	26	12	22
8" D5436MT	108	84	108	28⅝	54	16½	36	11	30
8" D5436SMT	90	54	84	21⅝	42	16½	29	9½	21

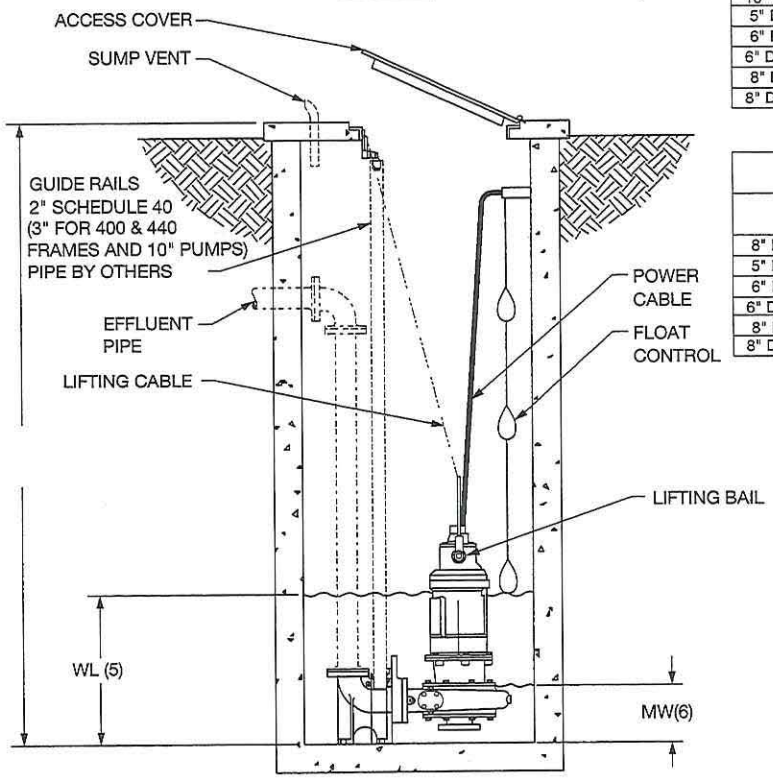

ELEVATION

NOTES:

(1) ALL DIMENSIONS ARE IN INCHES UNLESS NOTED.
(2) FOR USE WITH IMPELLER DESIGN T8D1A.
(3) FOR USE WITH IMPELLER DESIGNS T8D1D OR TAKC5W.
(4) 5400'S AND 5400K'S ARE DIMENSIONALLY IDENTICAL.
(5) RECOMMENDED LOW WATER LEVEL FOR CONTINUOUS OPERATION. 210 FRAME AND WATER JACKETED 250 THRU 440 FRAME UNITS CAN OPERATE CONTINUOUSLY AT "MW" WATER LEVEL.
(6) WATER LEVEL MAY BE DRAWN DOWN TO THIS LEVEL FOR SHORT TIME DUTY IN AIR MOTOR RATINGS. DRAW DOWN CAN OCCUR OVER A PERIOD OF 15 MINUTES.
(7) CLOCKWISE ROTATION SHOWN COUNTERCLOCKWISE IS AVAILABLE.
(8) BASES ARE DESIGNED TO HAVE FULL CONTACT WITH GROUT OR A SOLE PLATE GROUTED IN PLACE.
(9) NOT FOR CONSTRUCTION, INSTALLATION, OR APPLICATION PURPOSES UNLESS CERTIFIED. DIMENSIONS SHOWN MAY VARY DUE TO NORMAL MANUFACTURING TOLERANCES.
(10) CONTRACTOR IS RESPONSIBLE FOR MOUNTING SUPPORT FOR OFFSET GUIDE BRACKETS.
(11) REFER TO BASIC PUMP DIMENSION DRAWING FOR WL AND MW DIMENSIONS.

DUPLEX, D5430MT, SUBMERSIBLE PULL-UP
SINGLE DOOR ACCESS COVER

Fairbanks Morse Pump

DWG NO 543MS123 REV NO 2

34

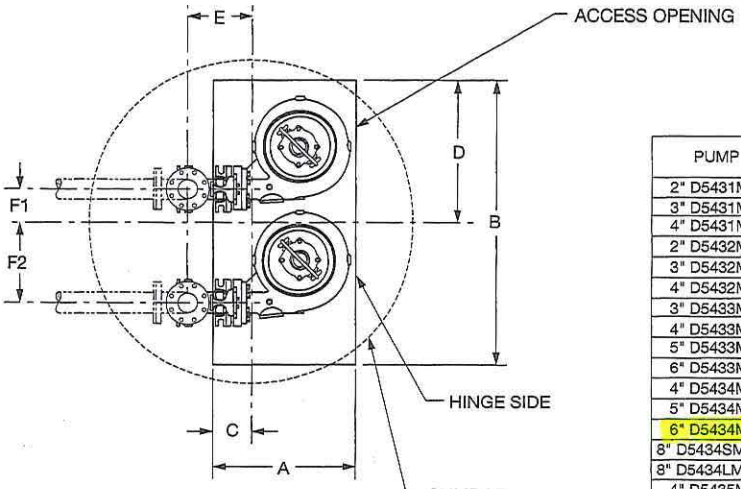

PLAN VIEW

PUMP	SUMP I.D.	A	B	C	D	E	F1	F2
2" D5431MT	54	30	48	6	24	10	9	13
3" D5431MT	48	24	36	6	18	10	4	12
4" D5431MT	60	30	48	8	24	12	7	14
2" D5432MT	54	30	48	6	24	10	9	13
3" D5432MT	60	30	48	7	24	11	7	14
4" D5432MT	66	30	54	7	27	11	7	16
3" D5433MT	60	30	48	9	24	13	6	15
4" D5433MT	66	36	60	8	30	12	7	18
5" D5433MT	78	36	66	7¾	33	13	7	20
6" D5433MT	78	36	66	8¾	33	14	6	21
4" D5434MT	72	42	66	11	33	16	5	22
5" D5434MT	84	42	72	7¾	36	13	5	25
6" D5434MT	90	42	78	9¾	39	15	7	27
8" D5434SMT(2)	84	42	72	10½	36	17	8	22
8" D5434LMT(3)	96	42	90	9½	45	16	8	29
4" D5435MT	66	36	60	11	30	15	8	16
8" D5435MT	114	54	108	12½	54	19	9	39
10" D5435MT	126	66	108	11⅜	54	20	10	37
5" D5436MT	84	42	72	7¾	36	13	9	21
6" D5436MT	84	42	72	10¾	36	16	8	23
6" D5436LMT	84	42	72	10¾	36	16	8	23
8" D5436MT	114	54	108	12½	54	19	9	39
8" D5436SMT	90	48	78	12½	39	19	9	26

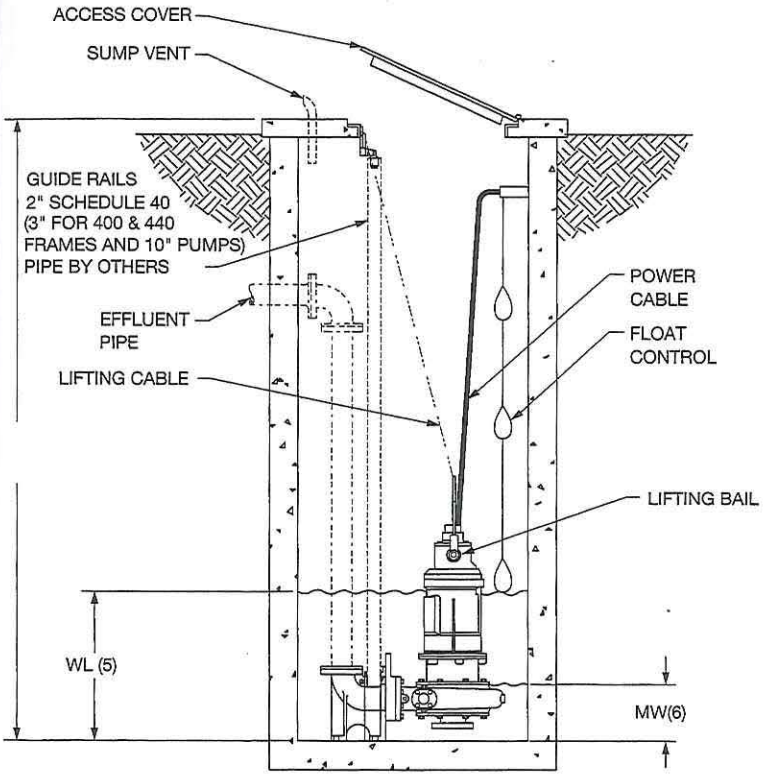

ELEVATION

400 & 440 FRAME PUMPS REQUIRING HEAVY DUTY ELBOWS								
PUMP	SUMP I.D.	A	B	C	D	E	F1	F2
8" D5435MT	126	60	114	20⅝	57	28	16	32
5" D5436MT	96	48	84	15	42	22⅜	15	19
6" D5436MT	96	48	78	11⅛	39	18½	11	23
6" D5436LMT	96	48	84	13⅝	42	21	14	21½
8" D5436MT	126	60	114	20⅝	57	28	16	32
8" D5436SMT	102	54	96	20⅝	48	28	17	19

NOTES:

(1) ALL DIMENSIONS ARE IN INCHES UNLESS NOTED.
(2) FOR USE WITH IMPELLER DESIGN T8D1A.
(3) FOR USE WITH IMPELLER DESIGNS T8D1D OR TAKC5W.
(4) 5400'S AND 5400K'S ARE DIMENSIONALLY IDENTICAL.
(5) RECOMMENDED LOW WATER LEVEL FOR CONTINUOUS OPERATION. 210 FRAME AND WATER JACKETED 250 THRU 440 FRAME UNITS CAN OPERATE CONTINUOUSLY AT "MW" WATER LEVEL.
(6) WATER LEVEL MAY BE DRAWN DOWN TO THIS LEVEL FOR SHORT TIME DUTY IN AIR MOTOR RATINGS. DRAW DOWN CAN OCCUR OVER A PERIOD OF 15 MINUTES.
(7) CLOCKWISE ROTATION SHOWN COUNTERCLOCKWISE IS AVAILABLE.
(8) BASES ARE DESIGNED TO HAVE FULL CONTACT WITH GROUT OR A SOLE PLATE GROUTED IN PLACE.
(9) NOT FOR CONSTRUCTION, INSTALLATION, OR APPLICATION PURPOSES UNLESS CERTIFIED. DIMENSIONS SHOWN MAY VARY DUE TO NORMAL MANUFACTURING TOLERANCES.
(10) REFER TO BASIC PUMP DIMENSION DRAWING FOR WL AND MW DIMENSIONS.

DUPLEX IN-LINE, D5430MT, SUBMERSIBLE PULL-UP SINGLE DOOR ACCESS COVER

Fairbanks Morse Pump

DWG NO 543MS127 REV NO 2

VI-20 ALLO MUMPHREY 15% HYDRAULIC / STORAGE CALCS

ESTIMATED TOP OF STATION = 22.43
ESTIMATED FM = 4-6' BELOW GRADE = 18.43 T.P
ASSUME 24" PIPE = 16.43'
ASSUME 24" FREEBOARD = 14.43 = TOP OF WATER

CALCULATE STORAGE FOR 8 STARTS / HOUR

- FORCE MAIN LENGTH ESTIMATED FROM GOOGLE EARTH

- SEE ATTACHED SPREADSHEET FOR SYSTEM CURVE DEVELOPMENT

ASSUME 15' WET WELL = AREA = 176 FT^2/FT =
176 FT^3/FT
= 1.325 GAL/FT

REQD STORAGE = $V = \frac{tQ}{4}$ = 7,687.5 GAL
= 5.8' = 6' DEEP
⇒ 8.43 = BOTTOM
ADD 1.5'
= 6.93

TRY 12' WELL = 113 FT^3/FT = 848 GAL/FT

1) RECOMMENDED PUMP CAPACITY CALCULATION

Wet Well Width (Enter 0 for Circular Wet Well)	0
Wet Well Width (Enter 0 for Circular Wet Well)	0
Wet Well Diameter (Enter 0 for Square Wet Well)	15
Top of Water Elevation	-14
Bottom of Wet Well Elevation	-20
Depth of Wet Well	6
No. of Pumps in Station	3
Wet Well Volume (Cubic Feet)	1060
Wet Well Volume (Gallons)	7927
Minimum Pump Cycling Time (Minutes)	5
Maximum Pump Capacity (Gallons Per Minute)	6342
Maximum Pump Capacity (Cubic Feet Per Second)	848
Recommended Pump Capacity (Gallons Per Minute)	6000
Actual Pump Cycle Time @ Recommended Pump Capacity (Minutes)	5
No. Pump Starts per Hour per Pump @ Recommended Pump Capacity	4.0

The above calculations are based on the worst-case scenario for pump cycle time, which occurs when the inflow into the pump stations equals 50% of the pump capacity. This condition produces with shortest pump cycle time which is the most important design criteria with respect to the pump itself. The recommended pump capacity is "per pump" and was derived using best engineering judgement considering the pump cycle time and force main velocities. These parameters are somewhat constrained given that the force main size (diameter) is fixed and the wet well size and available storage capacity as also fixed. The recommended pump capacity was derived by balancing force main velocity with pump cycle times based on these given conditions. It is important to understand that the force main velocity shown is with one pump operating, and will increase at least daily with peak flow when at least two pumps are operating. Therefore, the force main velocity shown is a minimum value.

2) STATIC HEAD CALCULATION

			Remarks
Suction Side Static Head Elevation =	6.93	Feet	Estimated
Discharge Side Static Head Elevation =	19	Feet	Estimated
Total Static Head =	12.07	Feet	

2A) DESIRED FLOW AND VELOCITY (2.0<V,FPS<7.0)

Desired Flow, GPM	4200
Desired Flow, CFS	9.366
Desired Flow, MGD	6.048

Trial Force Main Sizes (in)	12	16	18	20	24
Velocity, FPS	11.93	6.71	5.30	4.30	2.98

3) SYSTEM CURVE CALCULATION

Fitting No.	Type	Diameter (in)	Equiv Length in Straight Pipe	Material	"C" Value	HW Sum	Remarks
1	Local PS Losses	12	200.00	DI	130	1.43935E-06	Estimated
2	PCCP Force Main	20	4400.00	PCCP	120	3.05841E-06	Estimated
3							
4							
5							
6							
7							
8							
9							
10							
11							
12							
13							
14							
15							
16							
17							
18							
19							
20							
21							
22							
23							
24							
25							
26							
27							
28							
29							
30							
31							
32							
33							
34							
35							
36							

HAZEN WILLIAMS EQN SUM MODIFIER 4.49776E-06

4400

3) SYSTEM CURVE CALCULATION (Continued)							
Fitting No.	Type	Diameter (in)	Equiv Length in Straight Pipe	Material	"C" Value	HW Sum	Remarks
37							
38							
39							
40							
41							
42							
43							
44							
45							
46							
47							
48							
49							
50							
51							
52							
53							
54							
55							
56							
57							
58							
59							
60							
61							
62							
63							
64							
65							
66							
67							
68							
69							
70							
71							
72							

HAZEN WILLIAMS EQN SUM MODIFIER 0
Sum of Modifiers 4.49776E-06

3) SYSTEM CURVE CALCULATION (Continued)

Flow, GPM	Static Head (ft)	Friction Head (ft, HW)	TDH (ft)	Flow, MGD	Flow, CFS
0	12.07	0.00	12.07	0.00	0.00
500	12.07	0.44	12.51	0.72	1.12
1000	12.07	1.60	13.67	1.44	2.23
1500	12.07	3.38	15.45	2.16	3.35
2000	12.07	5.75	17.82	2.88	4.46
2500	12.07	8.69	20.76	3.60	5.58
3000	12.07	12.18	24.25	4.32	6.69
3500	12.07	16.20	28.27	5.04	7.81
4000	12.07	20.74	32.81	5.76	8.92
4200	12.07	22.70	34.77	6.05	9.37
4500	12.07	25.79	37.86	6.48	10.04
5000	12.07	31.34	43.41	7.20	11.15
6000	12.07	43.91	55.98	8.64	13.38
6500	12.07	50.92	62.99	9.36	14.50
7000	12.07	58.40	70.47	10.08	15.61

4) PUMP CURVE AND PUMP CHARACTERISTICS

Pump Head (ft)	Flow w/ 1 Pump On (GPM)	Flow w/ 'x' Pumps On (GPM)	Flow w/ 'x' Pumps On (GPM)	Flow w/ 1 Pump On (MGD)	Flow w/ 'x' Pumps On (MGD)	Flow w/ 'x' Pumps On (MGD)
No. On						

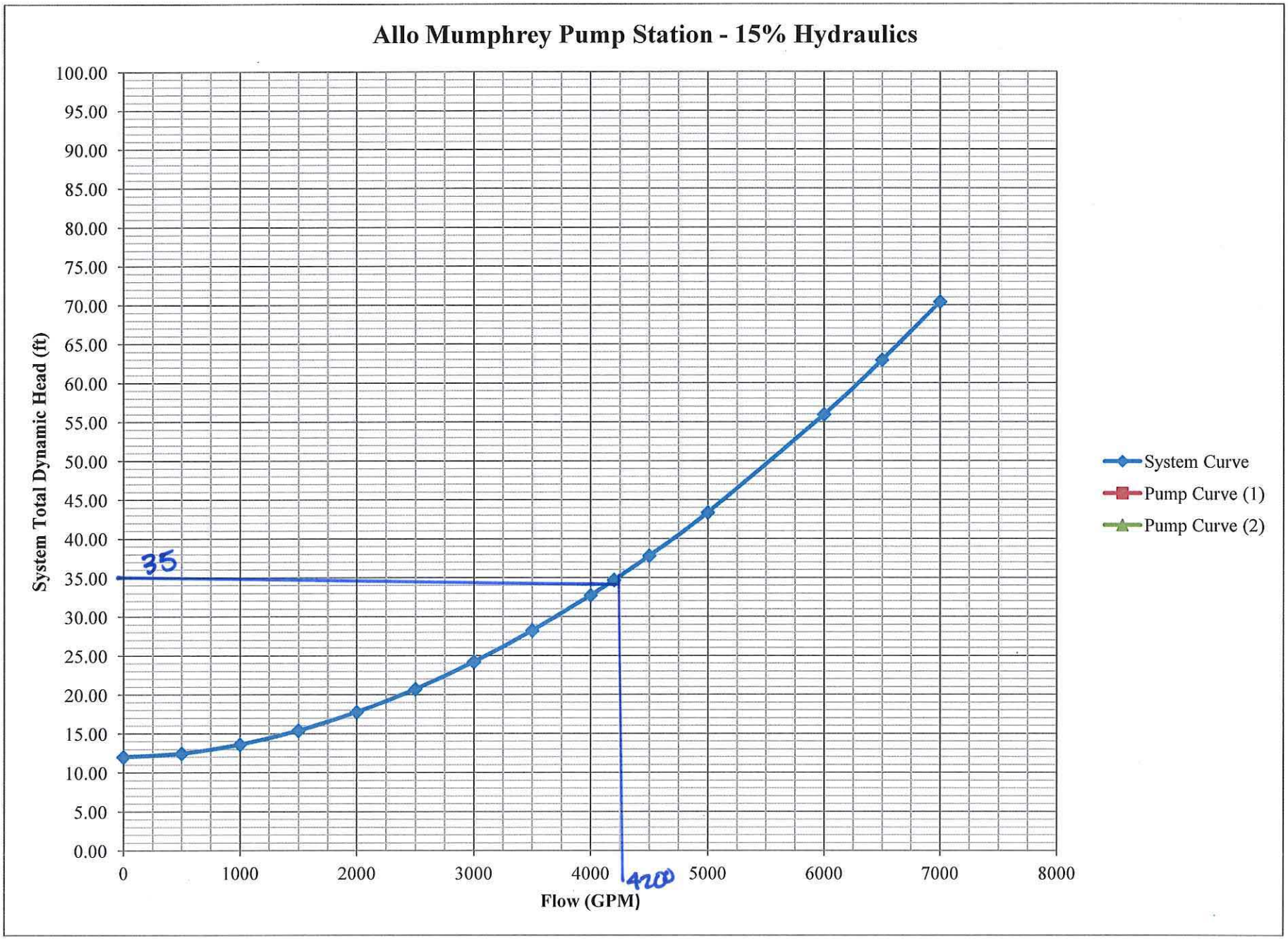
Allo Mumphrey Pump Station - 15% Hydraulics
System Total Dynamic Head (ft)
100.00
95.00
90.00
85.00
80.00
75.00
70.00
65.00
60.00
55.00
50.00
45.00
40.00
35.00
30.00
25.00
20.00
15.00
10.00
5.00
0.00
0
1000
2000
3000
4000
5000
6000
7000
8000
Flow (GPM)
35
4200
System Curve
Pump Curve (1)
Pump Curve (2)

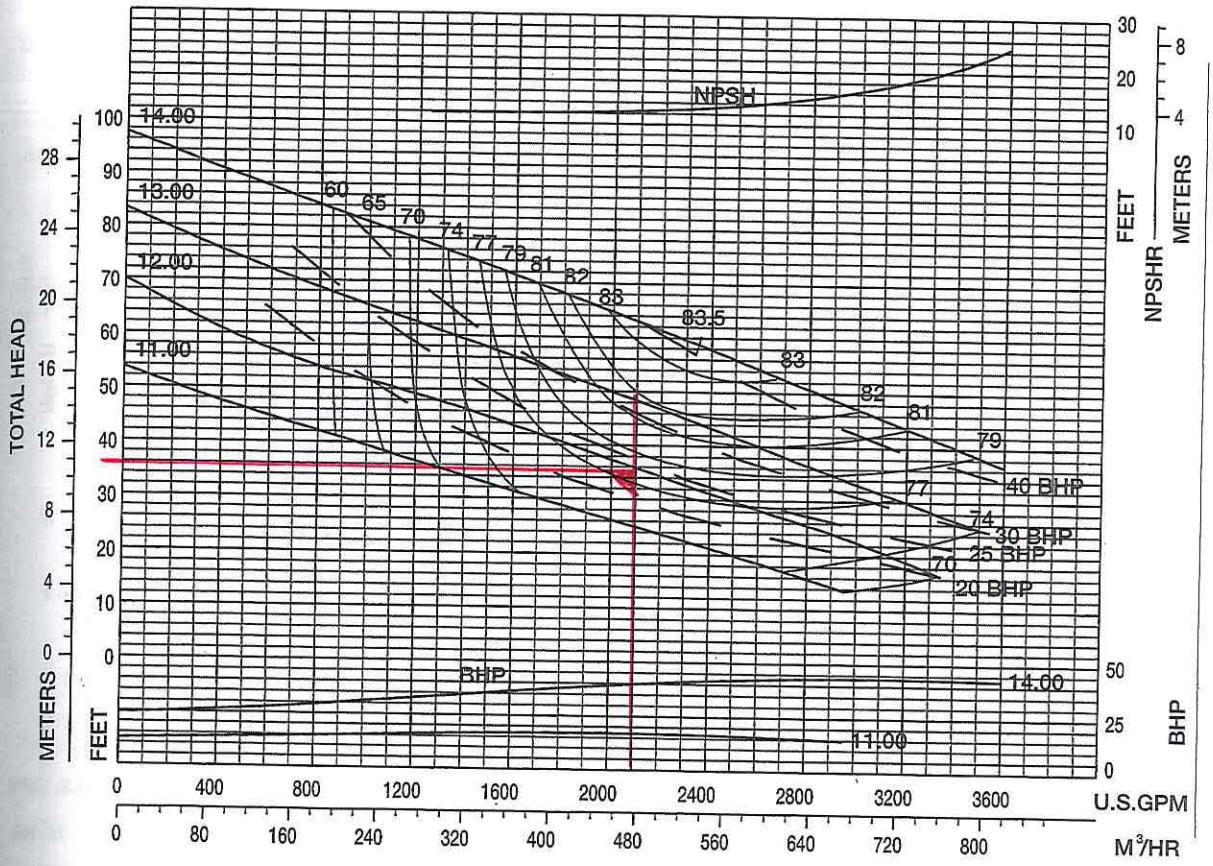

8" 5434S MV
SUBMERSIBLE

1185 RPM

NO. OF VANES
2

SUCTION SIZE
10"

IMPELLER
T8D1A

INLET AREA
62.99 SQ.IN.

MAX. SPHERE
3 1/2"

34M806G (Future)

8" 5434L MVK
SUBMERSIBLE

1185 RPM
TYPE K BLADELESS

SUCTION SIZE
10"

IMPELLER
T8D1G

INLET AREA
50.30 SQ.IN.

MAX. SPHERE
5"

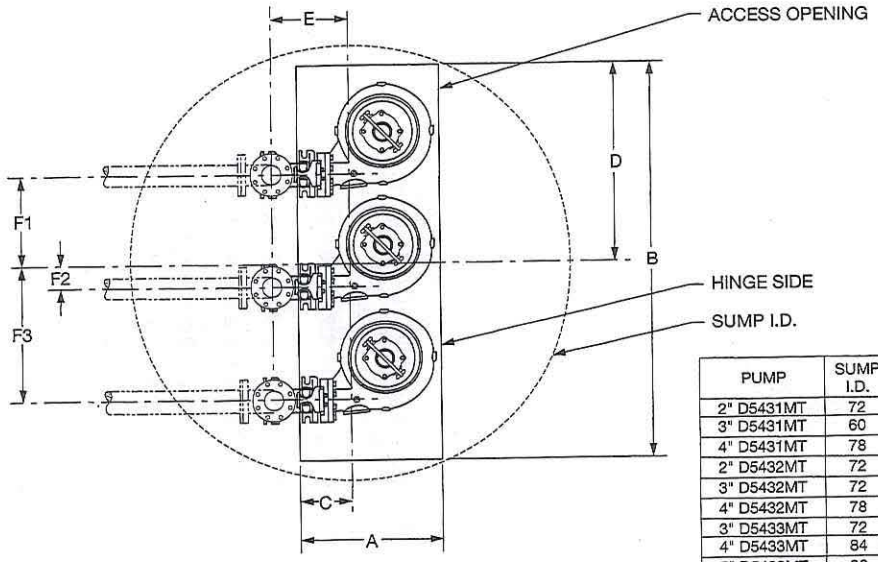

PLAN VIEW

13'5 - USE 15' FOR PRELIM

PUMP	SUMP I.D.	A	B	C	D	E	F1	F2	F3
2" D5431MT	72	30	72	6	36	10	18	2	22
3" D5431MT	60	24	54	6	27	10	12	4	20
4" D5431MT	78	30	66	11	33	15	17	3	23
2" D5432MT	72	30	72	6	36	10	18	2	22
3" D5432MT	72	30	72	4	36	8	16	5	26
4" D5432MT	78	30	78	7	39	11	17	5	27
3" D5433MT	72	30	72	7	36	11	16	5	26
4" D5433MT	84	36	84	11	42	15	20	5	30
5" D5433MT	96	36	90	11¾	45	17	20	6	32
6" D5433MT	96	36	90	9¾	45	15	20	6	32
4" D5434MT	96	42	90	16	45	21	20	7	34
5" D5434MT	108	42	102	8¾	51	14	22	8½	39
6" D5434MT	114	42	114	8¾	57	14	24	10	44
8" D5434SMT(2)	108	42	102	8½	51	15	21	9	39
8" D5434LMT(3)	126	42	126	8½	63	15	24	12	48
4" D5435MT	84	36	84	11	42	15	18	6	30
8" D5435MT	162	54	162	19½	81	26	34	14	62
10" D5435MT	168	66	156	22⅝	78	31	37	10	57
5" D5436MT	108	42	96	9¾	48	15	21	8	37
6" D5436MT	114	42	108	11¾	54	17	22	10	42
6" D5436LMT	114	42	108	11¾	54	17	22	10	42
8" D5436MT	162	54	162	19½	81	26	34	14	62
8" D5436SMT	120	48	114	12½	57	19	26	9	44

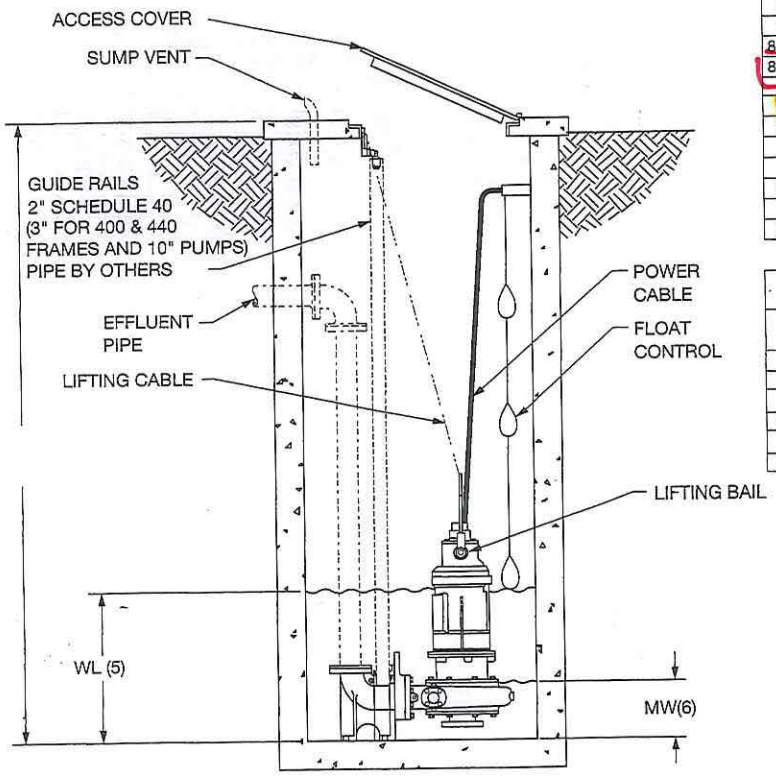

ELEVATION

400 & 440 FRAME PUMPS REQUIRING HEAVY DUTY ELBOWS									
PUMP	SUMP I.D.	A	B	C	D	E	F1	F2	F3
8" D5435MT	168	60	168	20⅝	84	28	40	9	58
5" D5436MT	126	48	120	15	60	22⅜	31	3	37
6" D5436MT	126	48	114	11⅛	57	18½	29	5	39
6" D5436LMT	126	48	120	14⅝	60	22	32	3	38
8" D5436MT	168	60	168	20⅝	84	28	40	9	58
8" D5436SMT	132	54	132	22⅝	66	30	35	1	37

NOTES:

(1) ALL DIMENSIONS ARE IN INCHES UNLESS NOTED.
(2) FOR USE WITH IMPELLER DESIGN T8D1A.
(3) FOR USE WITH IMPELLER DESIGNS T8D1D OR TAKC5W.
(4) 5400'S AND 5400K'S ARE DIMENSIONALLY IDENTICAL.
(5) RECOMMENDED LOW WATER LEVEL FOR CONTINUOUS OPERATION. 210 FRAME AND WATER JACKETED 250 THRU 440 FRAME UNITS CAN OPERATE CONTINUOUSLY AT "MW" WATER LEVEL.
(6) WATER LEVEL MAY BE DRAWN DOWN TO THIS LEVEL FOR SHORT TIME DUTY IN AIR MOTOR RATINGS. DRAW DOWN CAN OCCUR OVER A PERIOD OF 15 MINUTES.
(7) CLOCKWISE ROTATION SHOWN COUNTERCLOCKWISE IS AVAILABLE.
(8) BASES ARE DESIGNED TO HAVE FULL CONTACT WITH GROUT OR A SOLE PLATE GROUTED IN PLACE.
(9) NOT FOR CONSTRUCTION, INSTALLATION, OR APPLICATION PURPOSES UNLESS CERTIFIED. DIMENSIONS SHOWN MAY VARY DUE TO NORMAL MANUFACTURING TOLERANCES.
(10) REFER TO BASIC PUMP DIMENSION DRAWING FOR WL AND MW DIMENSIONS.

TRIPLEX IN-LINE, D5430MT, SUBMERSIBLE PULL-UP DOUBLE DOOR ACCESS COVER

Fairbanks Morse Pump

DWG NO 543MS133 REV NO 2

1) RECOMMENDED PUMP CAPACITY CALCULATION

Wet Well Width (Enter 0 for Circular Wet Well)	13.3
Wet Well Width (Enter 0 for Circular Wet Well)	20
Wet Well Diameter (Enter 0 for Square Wet Well)	0
Top of Water Elevation	7.2
Bottom of Wet Well Elevation	0
Depth of Wet Well	7
No. of Pumps in Station	4
Wet Well Volume (Cubic Feet)	1915
Wet Well Volume (Gallons)	14326
Minimum Pump Cycling Time (Minutes)	5
Maximum Pump Capacity (Gallons Per Minute)	11461
Maximum Pump Capacity (Cubic Feet Per Second)	1532
Recommended Pump Capacity (Gallons Per Minute)	6000
Actual Pump Cycle Time @ Recommended Pump Capacity (Minutes)	10
No. Pump Starts per Hour per Pump @ Recommended Pump Capacity	2.0

The above calculations are based on the worst-case scenario for pump cycle time, which occurs when the inflow into the pump stations equals 50% of the pump capacity. This condition produces with shortest pump cycle time which is the most important design criteria with respect to the pump itself. The recommended pump capacity is "per pump" and was derived using best engineering judgement considering the pump cycle time and force main velocities. These parameters are somewhat constrained given that the force main size (diameter) is fixed and the wet well size and available storage capacity as also fixed. The recommended pump capacity was derived by balancing force main velocity with pump cycle times based on these given conditions. It is important to understand that the force main velocity shown is with one pump operating, and will increase at least daily with peak flow when at least two pumps are operating. Therefore, the force main velocity shown is a minimum value.

2) STATIC HEAD CALCULATION

			Remarks
Suction Side Static Head Elevation =	7.76	Feet	From Montgomery-Watson
Discharge Side Static Head Elevation =	36.55	Feet	Estimated from Google Earth V1-20 proposed location
Total Static Head =	28.79	Feet	

2A) DESIRED FLOW AND VELOCITY (2.0<V,FPS<7.0)

Desired Flow, GPM	6000
Desired Flow, CFS	13.38
Desired Flow, MGD	8.64

Trial Force Main Sizes (in)	16	20	24	30	36
Velocity, FPS	9.59	6.14	4.26	2.73	1.89

3) SYSTEM CURVE CALCULATION

Fitting No.	Type	Diameter (in)	Equiv Length in Straight Pipe	Material	"C" Value	HW Sum	Remarks
1	Pump Entrance	16	22.00	DI	130	3.90545E-08	Discharge Manifold
2	90 Deg Base Elbow	16	37.50	DI	130	6.65702E-08	Discharge Manifold
3	Pipe Spool	16	5.75	DI	130	1.02074E-08	Discharge Manifold
4	Knife Gate Valve	16	10.00	DI	130	1.7752E-08	Discharge Manifold
5	Pipe Spool	16	2.18	DI	130	3.86994E-09	Discharge Manifold
6	Sudden Reduction	10	7.00	DI	130	1.22318E-07	Discharge Manifold
7	90 Deg Elbow	10	25.10	DI	130	4.38599E-07	Discharge Manifold
8	Sudden Reduction	8	4.00	DI	130	2.07E-07	Discharge Manifold
9	Sudden Enlargement	12	8.00	DI	130	5.75742E-08	Discharge Manifold
10	Check Valve	12	49.70	DI	130	3.5768E-07	Discharge Manifold
11	Knife Gate Valve	12	7.96	DI	130	5.72863E-08	Discharge Manifold
12	90 Deg Elbow	12	29.80	DI	130	2.14464E-07	Discharge Manifold
13	Pipe Spool	12	10.73	DI	130	7.72214E-08	Discharge Manifold
14	Sudden Enlargement	20	16.00	DI	130	9.59075E-09	Discharge Manifold
15	90 Deg Elbow	20	25.10	DI	130	1.50455E-08	Discharge Manifold
16	Pipe Spool	20	2.40	DI	130	1.43861E-09	Discharge Manifold
17	Standard Tee Thru Flow	20	31.40	DI	130	1.88218E-08	Discharge Manifold
18	Pipe Spool	20	4.71	DI	130	2.82328E-09	Discharge Manifold
19	Standard Tee Thru Flow	20	31.40	DI	130	1.88218E-08	Discharge Manifold
20	Pipe Spool	20	2.71	DI	130	1.62443E-09	Discharge Manifold
21	Standard Tee Thru Flow	20	31.40	DI	130	1.88218E-08	Discharge Manifold
22	Pipe Spool	20	28.88	DI	130	1.73127E-08	Discharge Manifold
23	Standard Tee Thru Flow	20	31.40	DI	130	1.88218E-08	Discharge Manifold
24	Force Main	20	76.60	DI	130	4.59157E-08	Force Main
25	Long 90 Deg Elbow	20	25.10	DI	130	1.50455E-08	Force Main
26	Force Main	20	562.00	DI	130	3.36875E-07	Force Main
27	Long 90 Deg Elbow	20	25.10	DI	130	1.50455E-08	Force Main
28	Force Main	20	154.00	DI	130	9.2311E-08	Force Main
29	45 Deg Elbow	20	25.10	DI	130	1.50455E-08	Force Main
30	Force Main	20	9920.00	DI	130	5.94627E-06	Force Main
31	45 Deg Elbow	20	25.10	DI	130	1.50455E-08	Force Main
32	Force Main	20	6838.00	DI	130	4.09885E-06	Force Main
33	Long 90 Deg Elbow	20	25.10	DI	130	1.50455E-08	Force Main
34	Force Main	20	166.00	DI	130	9.9504E-08	Force Main
35							
36							

HAZEN WILLIAMS EQN SUM MODIFIER 1.24877E-05

18467.22

3) SYSTEM CURVE CALCULATION (Continued)							
Fitting No.	Type	Diameter (in)	Equiv Length in Straight Pipe	Material	"C" Value	HW Sum	Remarks
37							
38							
39							
40							
41							
42							
43							
44							
45							
46							
47							
48							
49							
50							
51							
52							
53							
54							
55							
56							
57							
58							
59							
60							
61							
62							
63							
64							
65							
66							
67							
68							
69							
70							
71							
72							

HAZEN WILLIAMS EQN SUM MODIFIER 0
Sum of Modifiers 1.24877E-05

3) SYSTEM CURVE CALCULATION (Continued)

Flow, GPM	Static Head (ft)	Friction Head (ft, HW)	TDH (ft)	Flow, MGD	Flow, CFS
0	28.79	0.00	28.79	0.00	0.00
1000	28.79	4.43	33.22	1.44	2.23
2000	28.79	15.97	44.76	2.88	4.46
3000	28.79	33.82	62.61	4.32	6.69
4000	28.79	57.58	86.37	5.76	8.92
5000	28.79	87.01	115.80	7.20	11.15
6000	28.79	121.92	150.71	8.64	13.38
7000	28.79	162.15	190.94	10.08	15.61
8000	28.79	207.59	236.38	11.52	17.84
9000	28.79	258.12	286.91	12.96	20.07
10000	28.79	313.68	342.47	14.40	22.30
11000	28.79	374.16	402.95	15.84	24.53
12000	28.79	439.51	468.30	17.28	26.76
13000	28.79	509.66	538.45	18.72	28.99
14000	28.79	584.55	613.34	20.16	31.22

4) PUMP CURVE AND PUMP CHARACTERISTICS

Pump Head (ft)	Flow w/ 1 Pump On (GPM)	Flow w/ 'x' Pumps On (GPM)	Flow w/ 'x' Pumps On (GPM)	Flow w/ 'x' Pumps On (GPM)
No. On	1	2	3	4
175	0	0.00	0.00	0.00
150	1850	3700.00	5550.00	7400.00
115	3800	7600.00	11400.00	15200.00
85	4400	8800.00	13200.00	17600.00

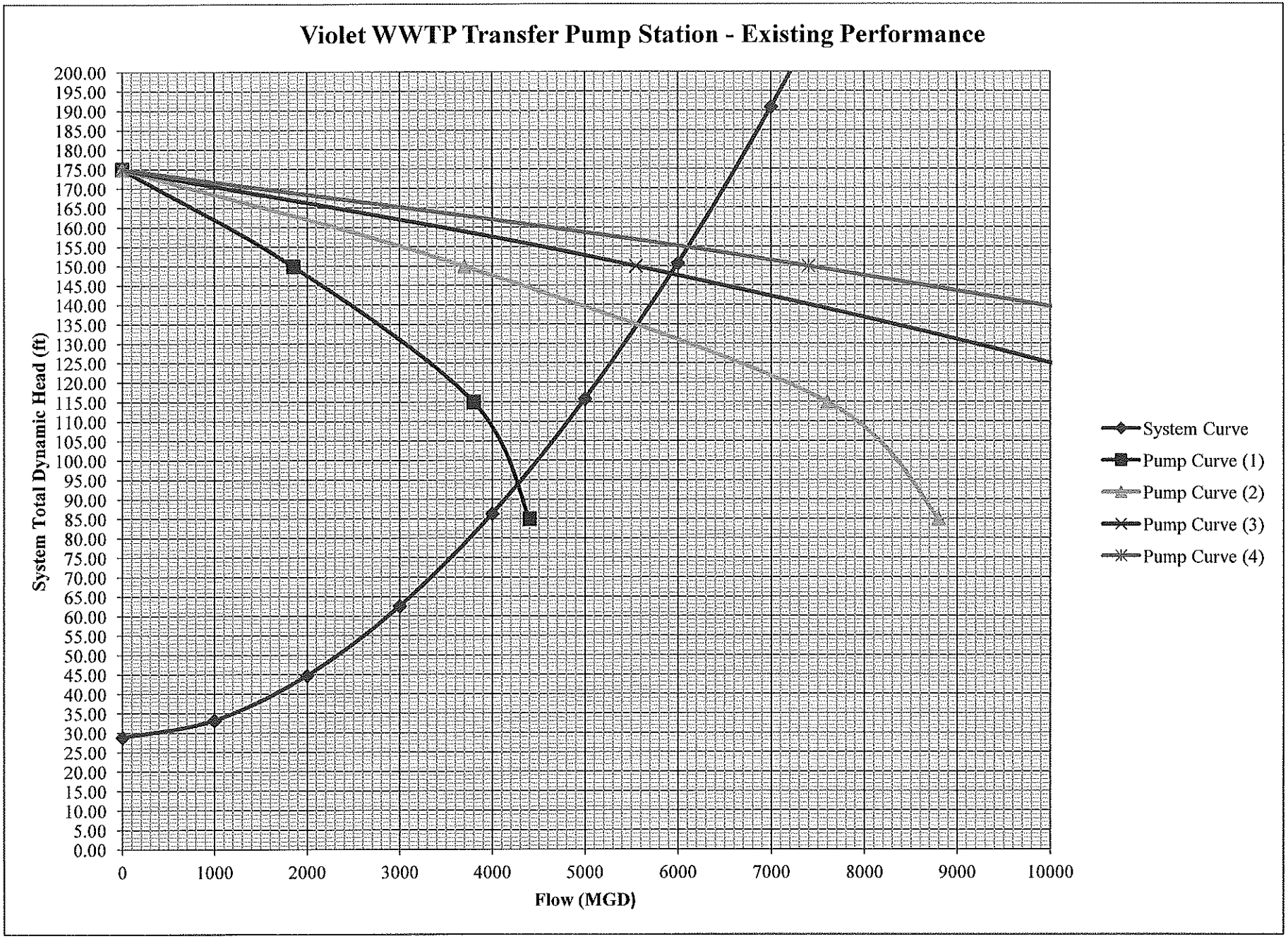
Violet WWTP Transfer Pump Station - Existing Performance
System Total Dynamic Head (ft)
200.00
195.00
190.00
185.00
180.00
175.00
170.00
165.00
160.00
155.00
150.00
145.00
140.00
135.00
130.00
125.00
120.00
115.00
110.00
105.00
100.00
95.00
90.00
85.00
80.00
75.00
70.00
65.00
60.00
55.00
50.00
45.00
40.00
35.00
30.00
25.00
20.00
15.00
10.00
5.00
0.00
0
1000
2000
3000
4000
5000
6000
7000
8000
9000
10000
Flow (MGD)
System Curve
Pump Curve (1)
Pump Curve (2)
Pump Curve (3)
Pump Curve (4)

Draft Hydraulics and Hydrologic (H&H) Study For
Violet Area Sewer Improvements
St. Bernard Parish

APPENDIX E – SEWERGEMS VISUAL DEPICTION

Prepared By:

H. Davis Cole & Associates, LLC
Consulting Engineers

In Association With:

BURK-KLEINPETER, INC.
ENGINEERS, ARCHITECTS, PLANNERS, ENVIRONMENTAL SCIENTISTS

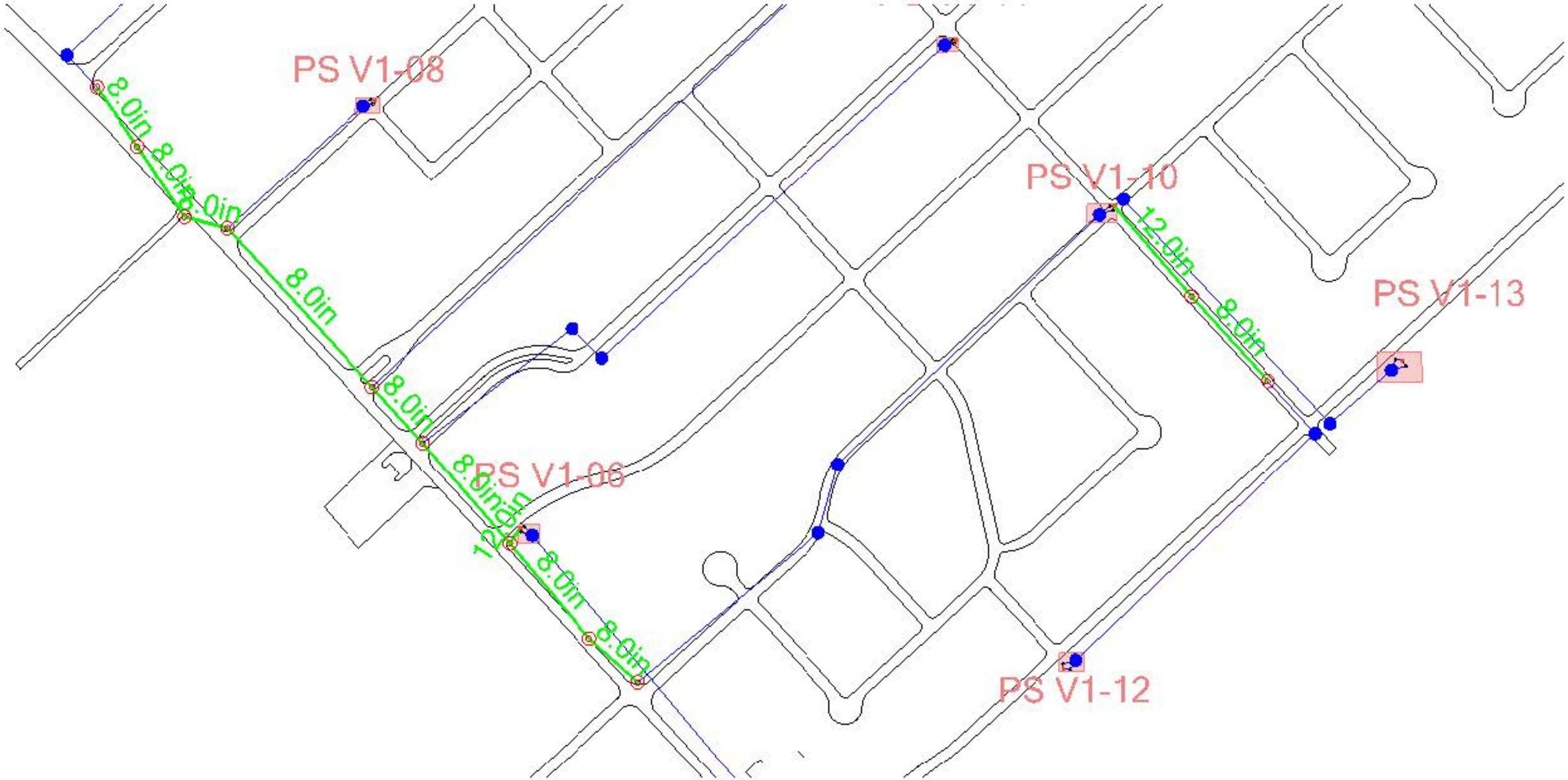

Sewer Sub-Basin 2 Gravity Main Diameters (in.)

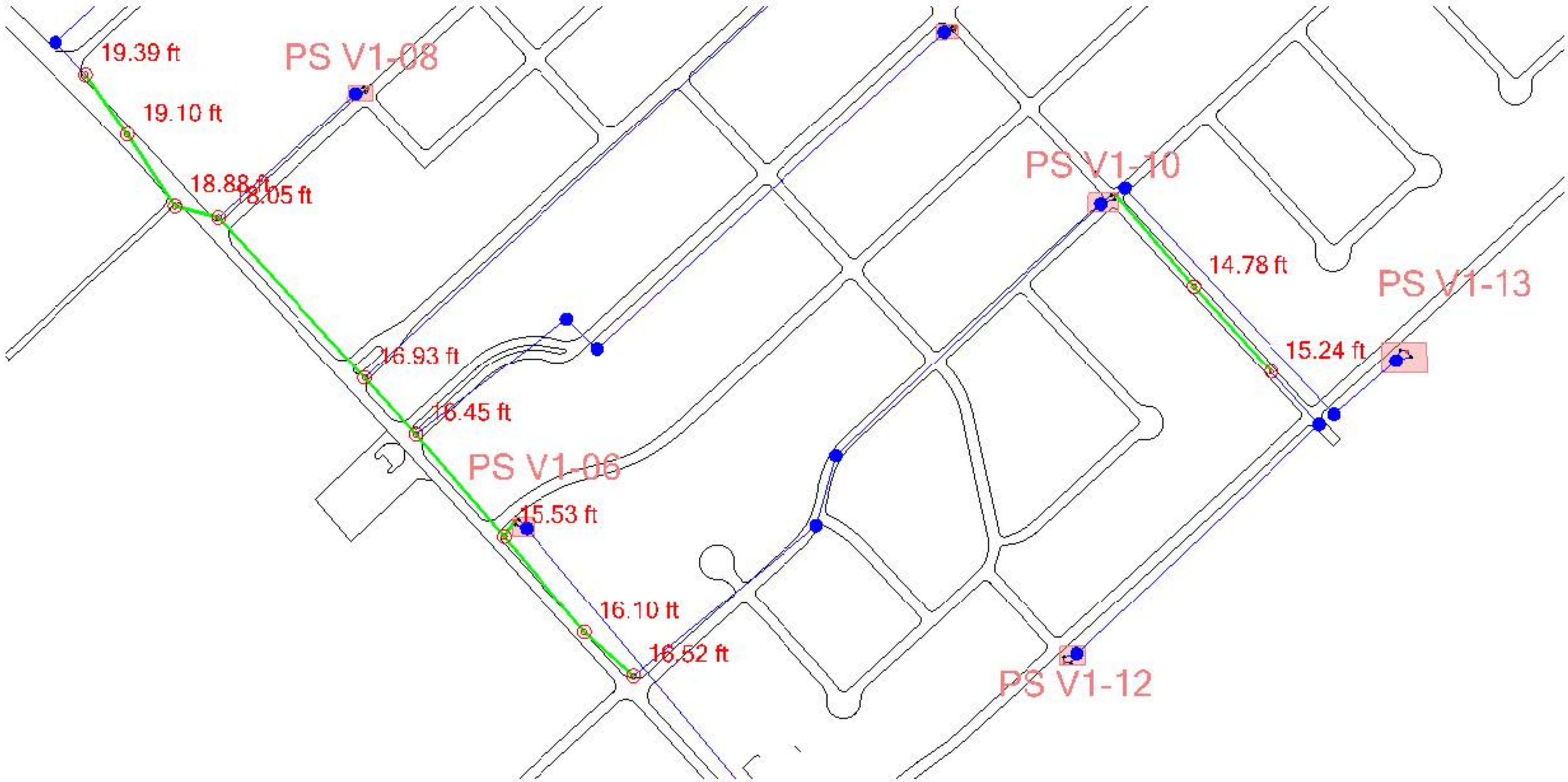

Sewer Sub-Basin 2 Manhole Inverts (ft.)

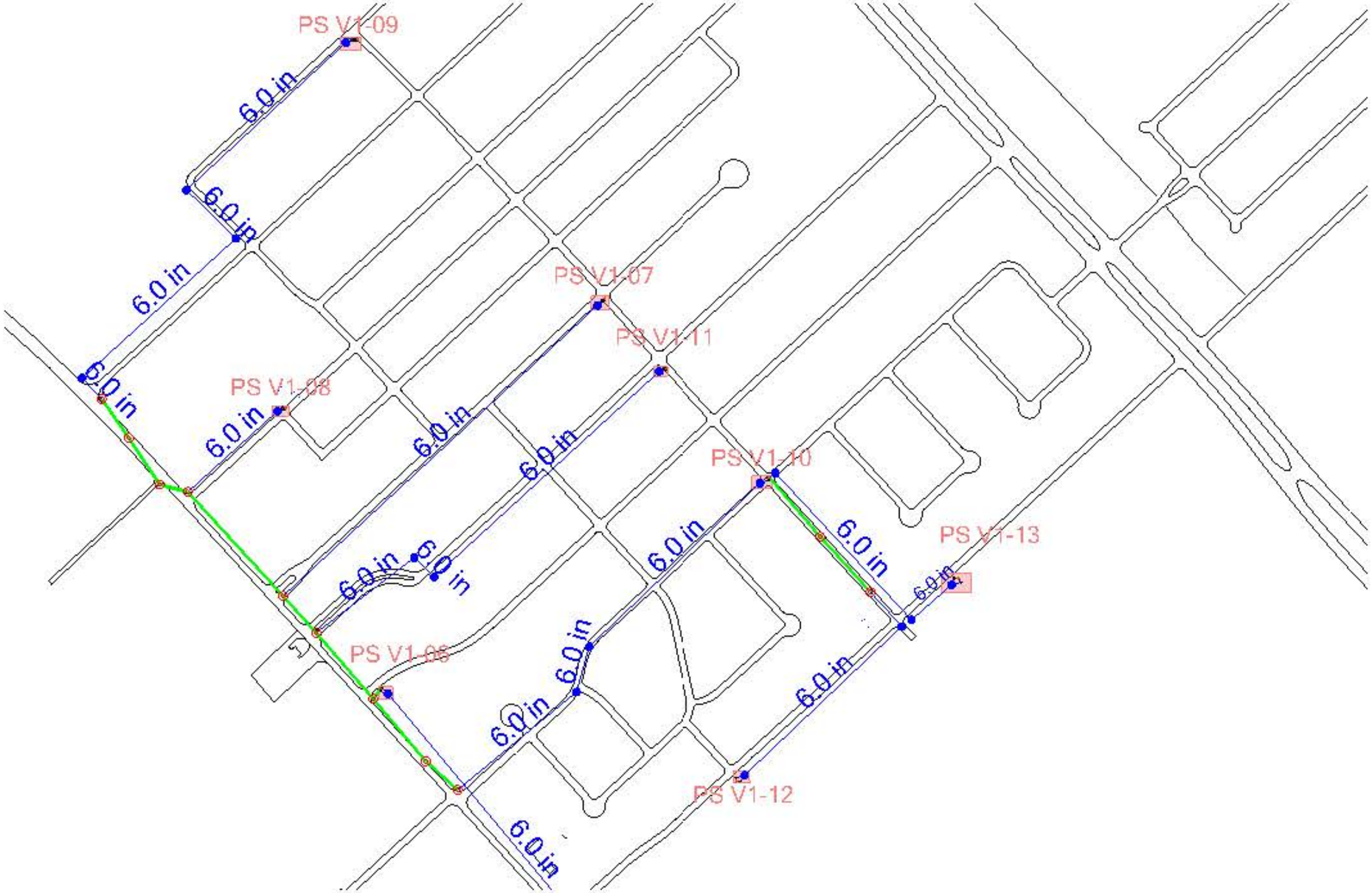

Sewer Sub-Basin 2 Force Main Diameters (in.)

Sewer Sub-Basin 3 (1) Gravity Main Diameters (in.)

Sewer Sub-Basin 3 (1) Manhole Inverts (ft.)

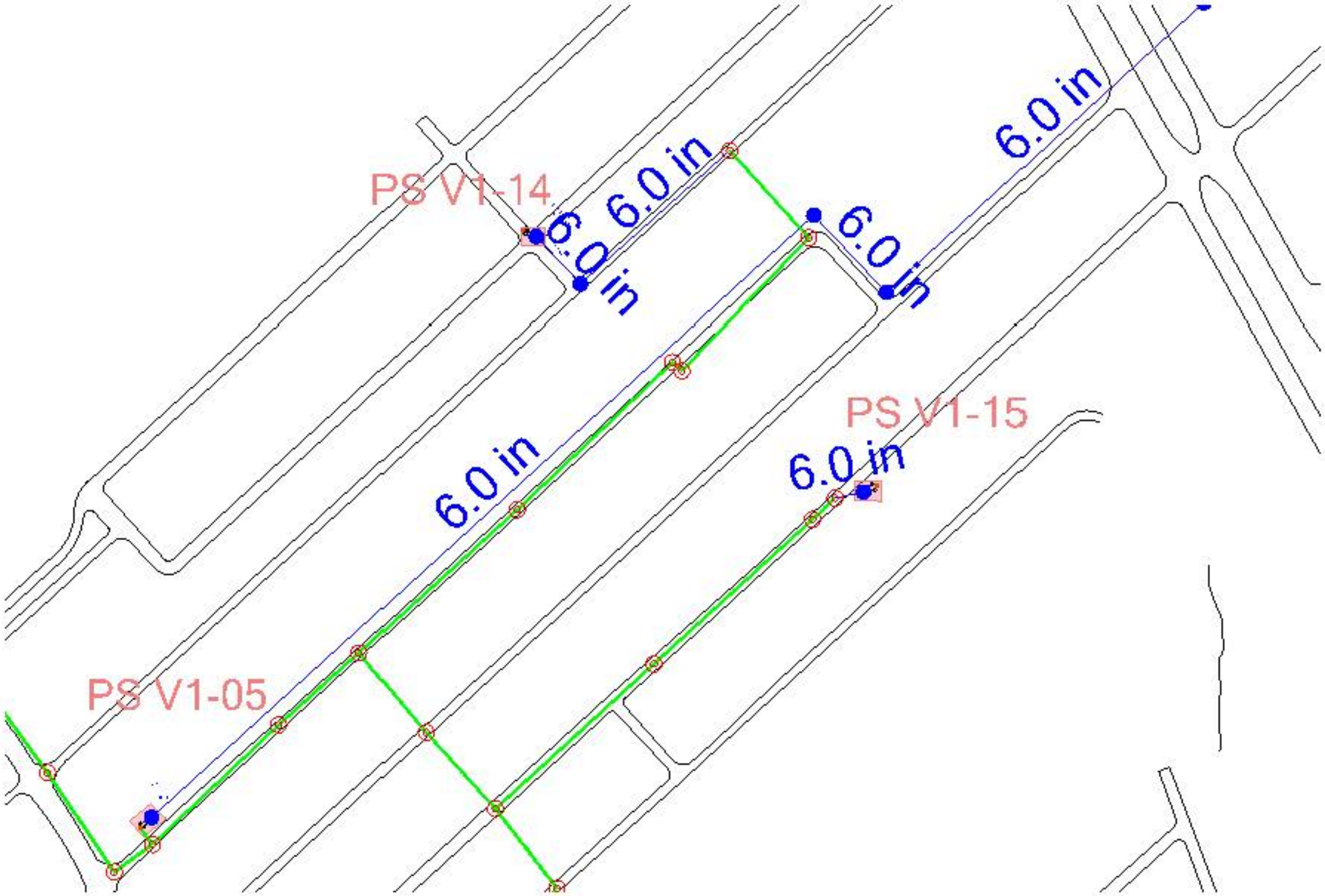

Sewer Sub-Basin 3 (1) Force Main Diameters (in.)

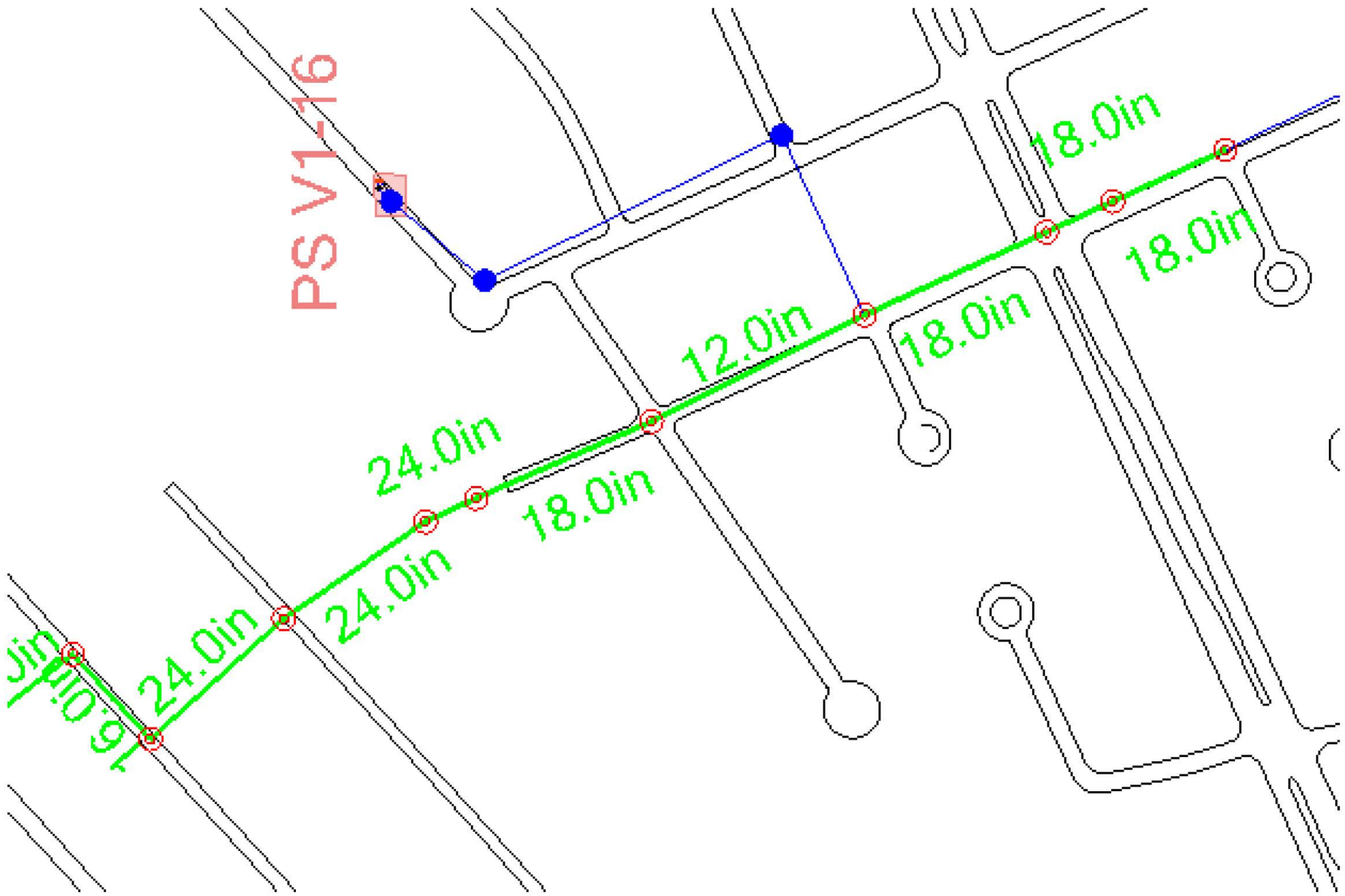

Sewer Sub-Basin 3 (2) Gravity Main Diameters (in.)

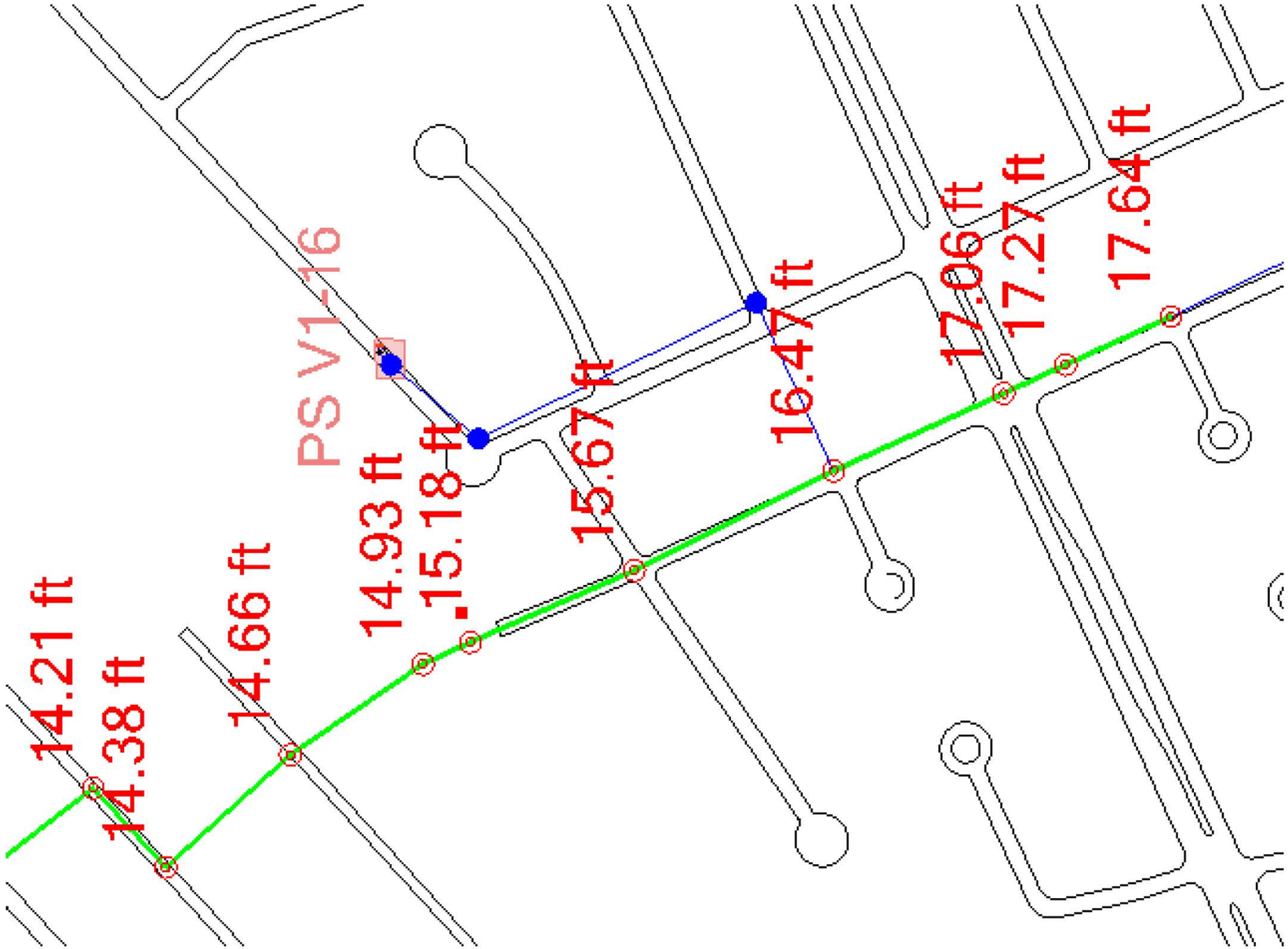

Sewer Sub-Basin 3 (2) Manhole Inverts (ft.)

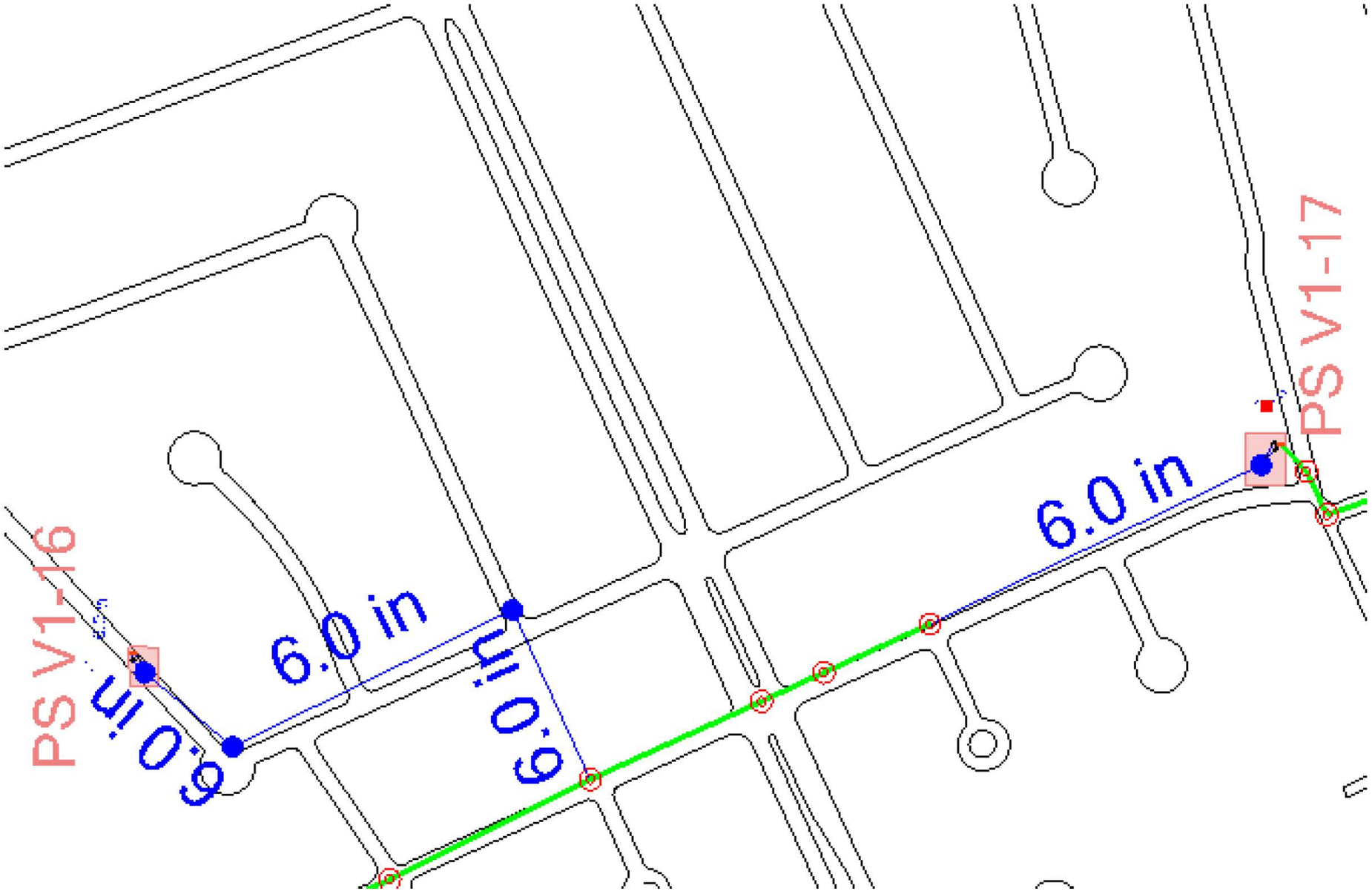

Sewer Sub-Basin 3 (2) Force Main Diameters (in.)

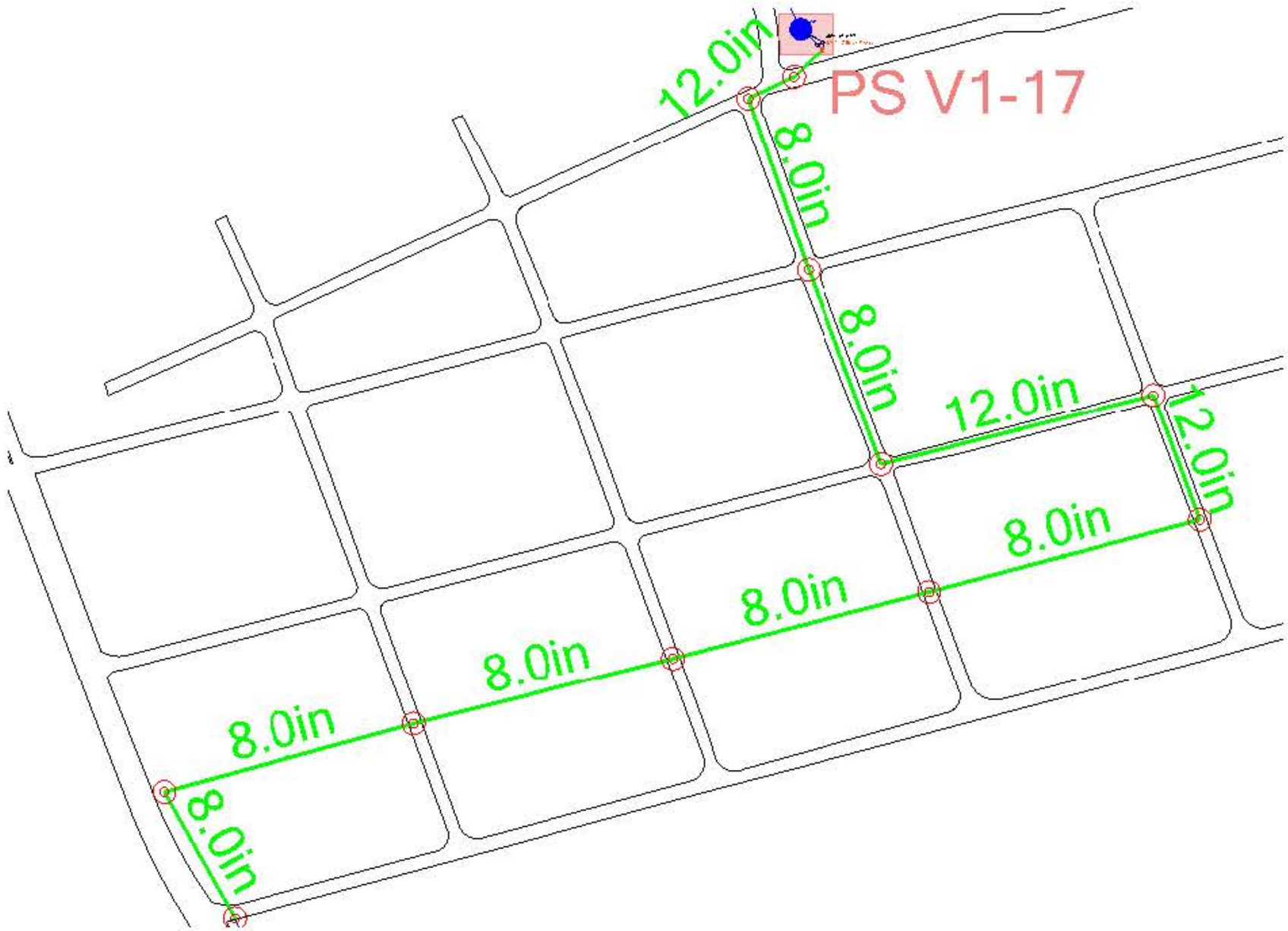

Sewer Sub-Basin 3 (3) Gravity Main Diameters (in.)

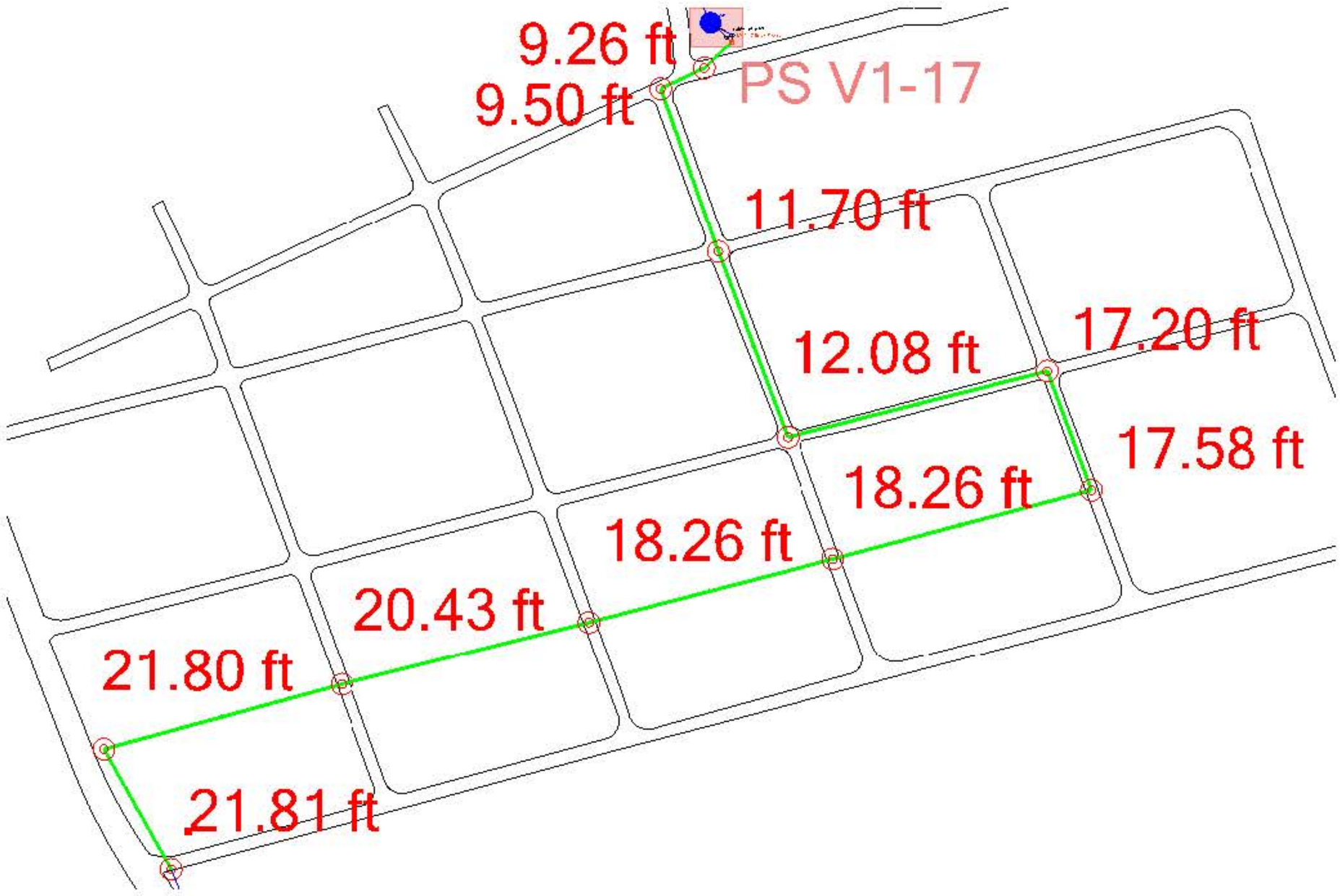

Sewer Sub-Basin 3 (3) Manhole Inverts (ft.)

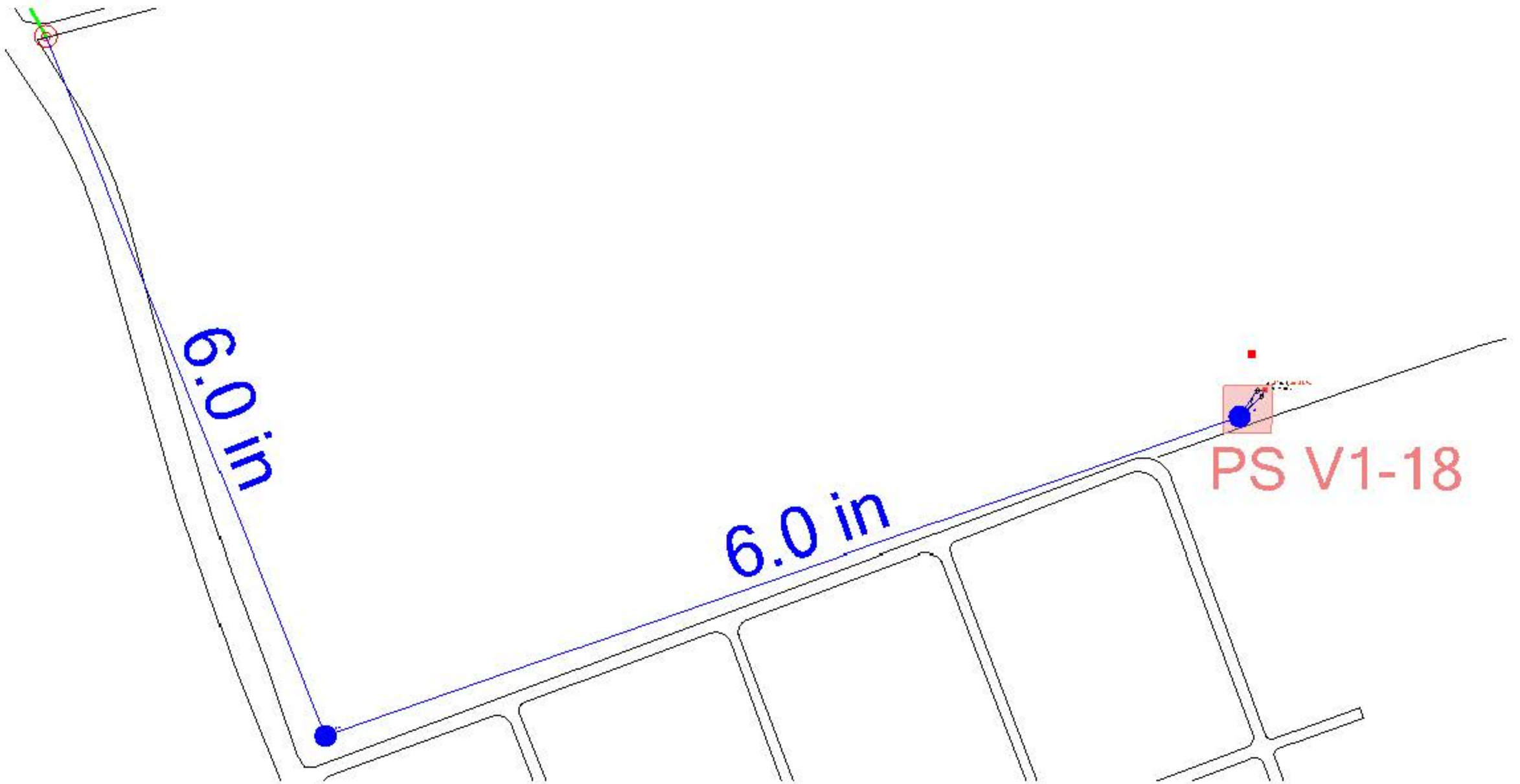

Sewer Sub-Basin 3 (3) Force Main Diameters (in.)

Violet WWTP Area Gravity Main Diameters (in.)

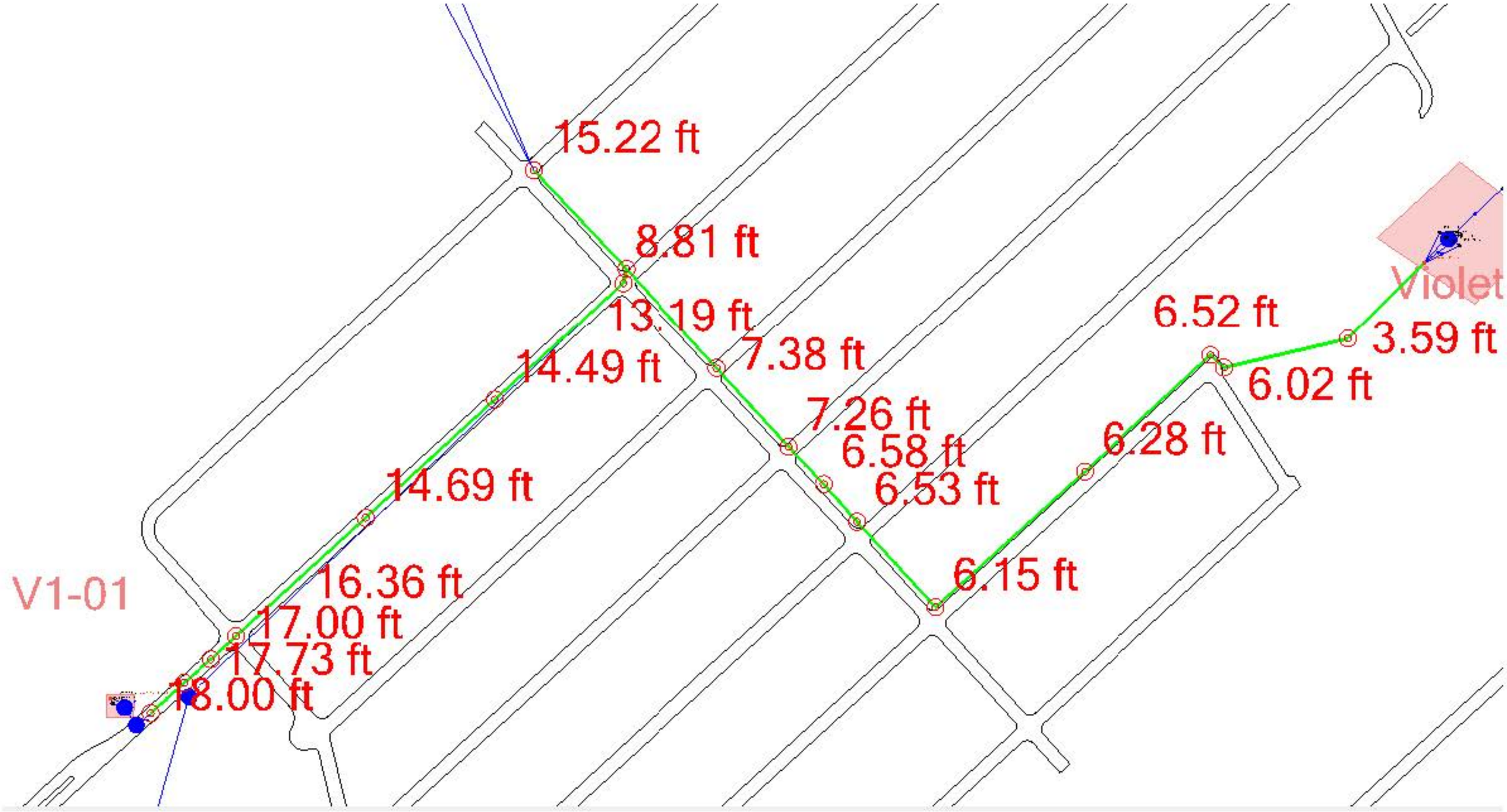

Violet WWTP Area Manhole Invert (ft.)

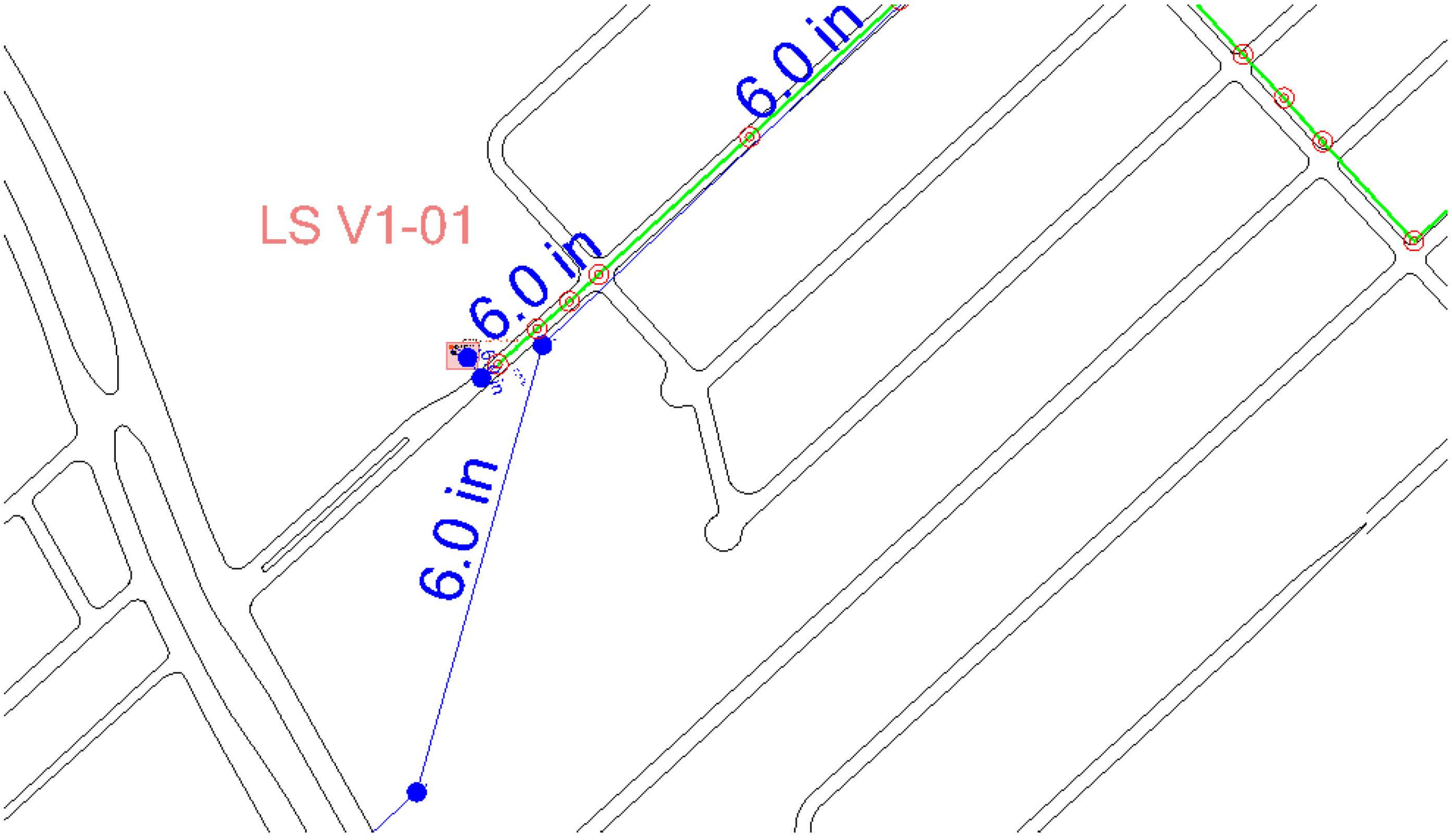

Violet WWTP Force Main Diameters (in.)

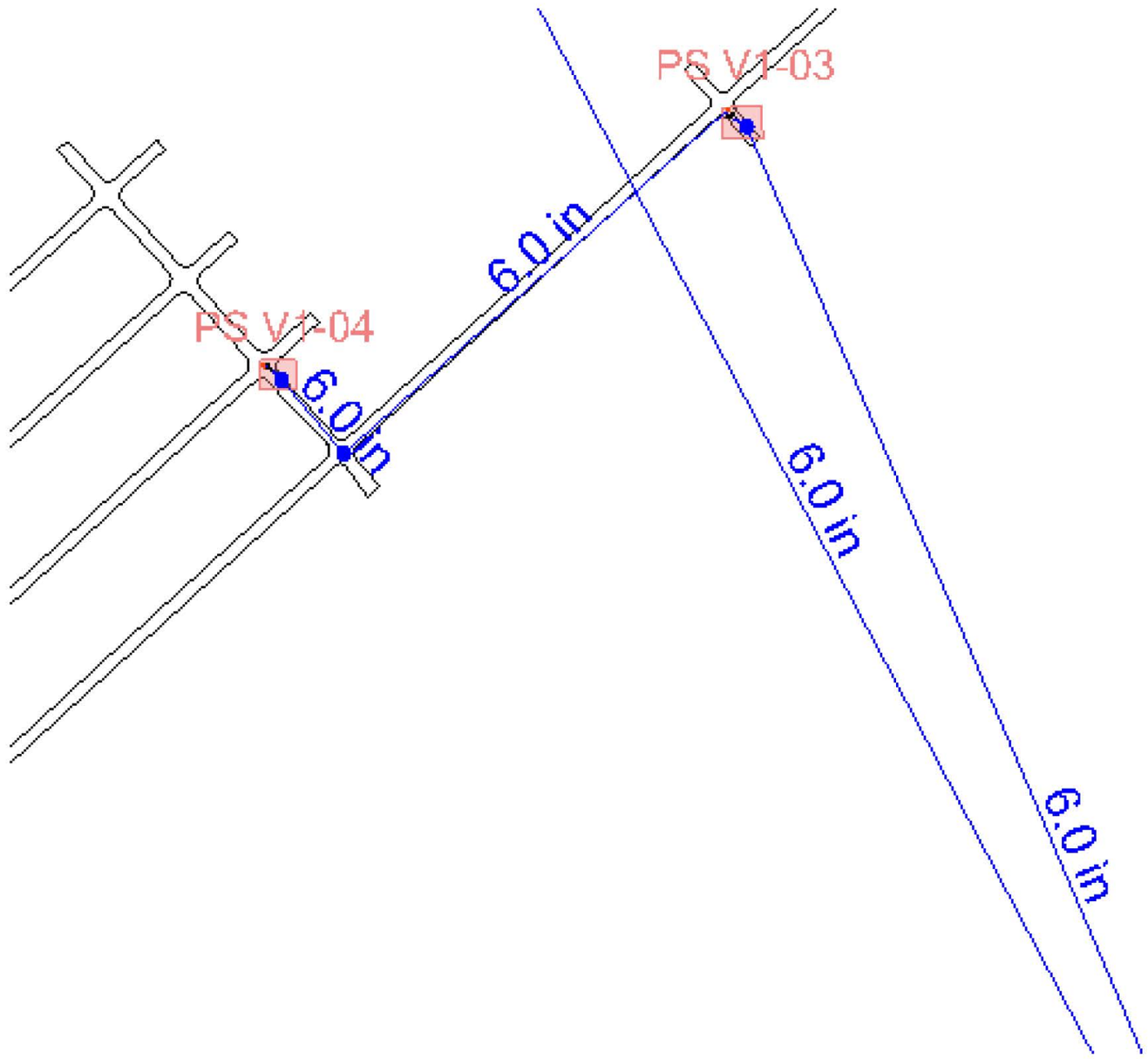

Sewer Sub-Basin 1 (1) Force Main Diameters (in.)

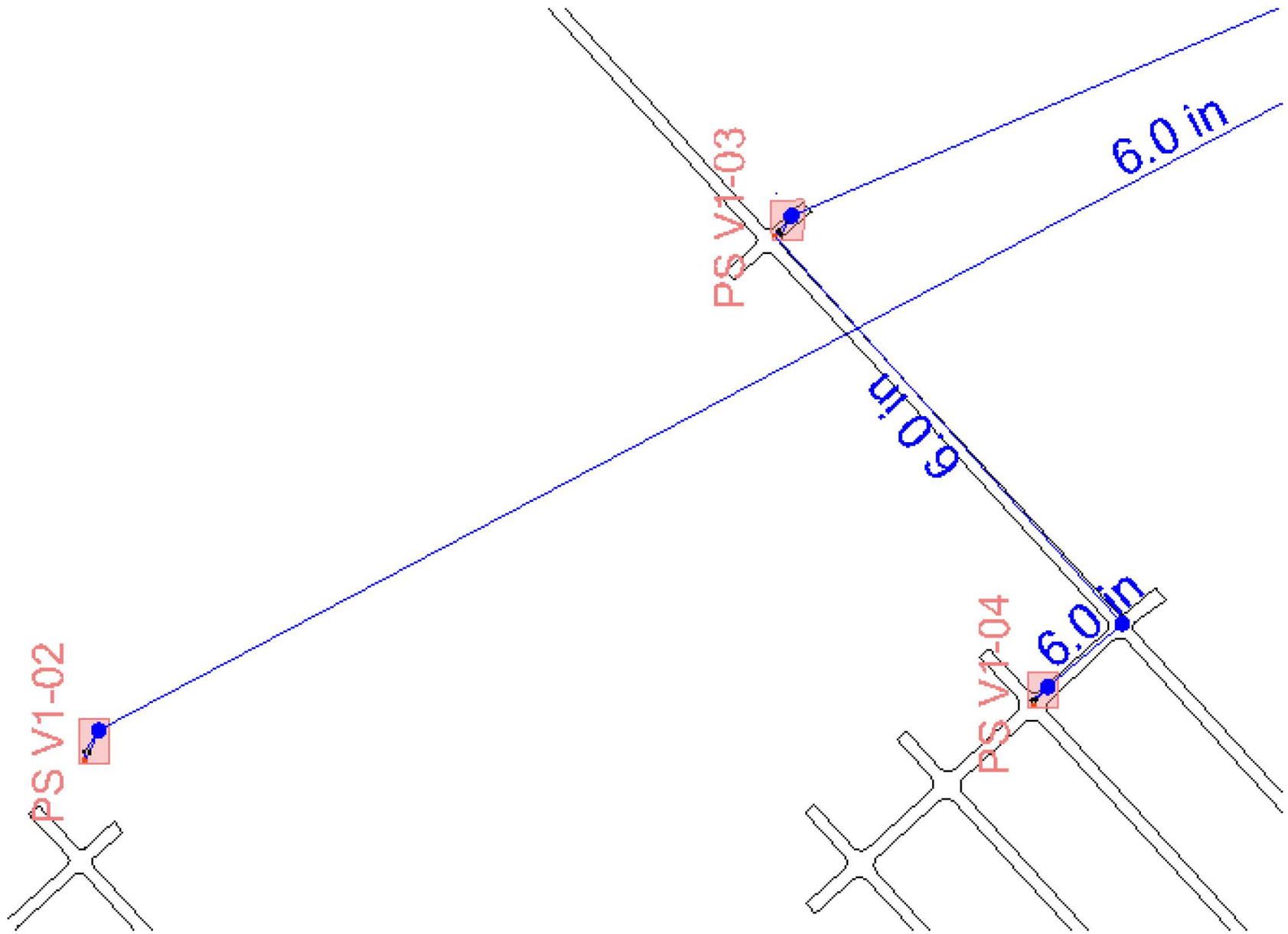

Sewer Sub-Basin 1 (2) Force Main Diameters (in.)

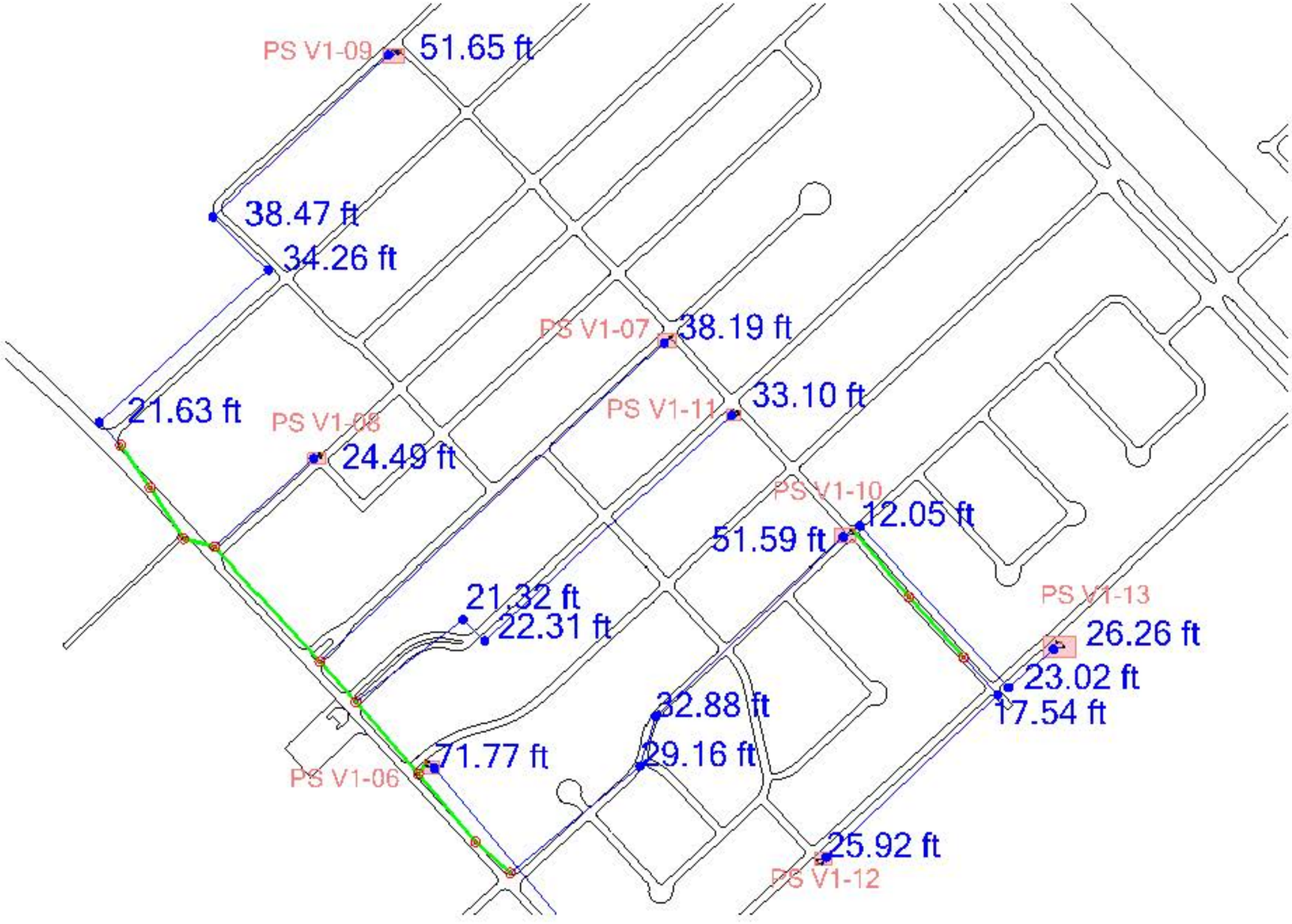

Sewer Sub-Basin 2 Existing Max. Hydraulic Grade Lines (ft.)

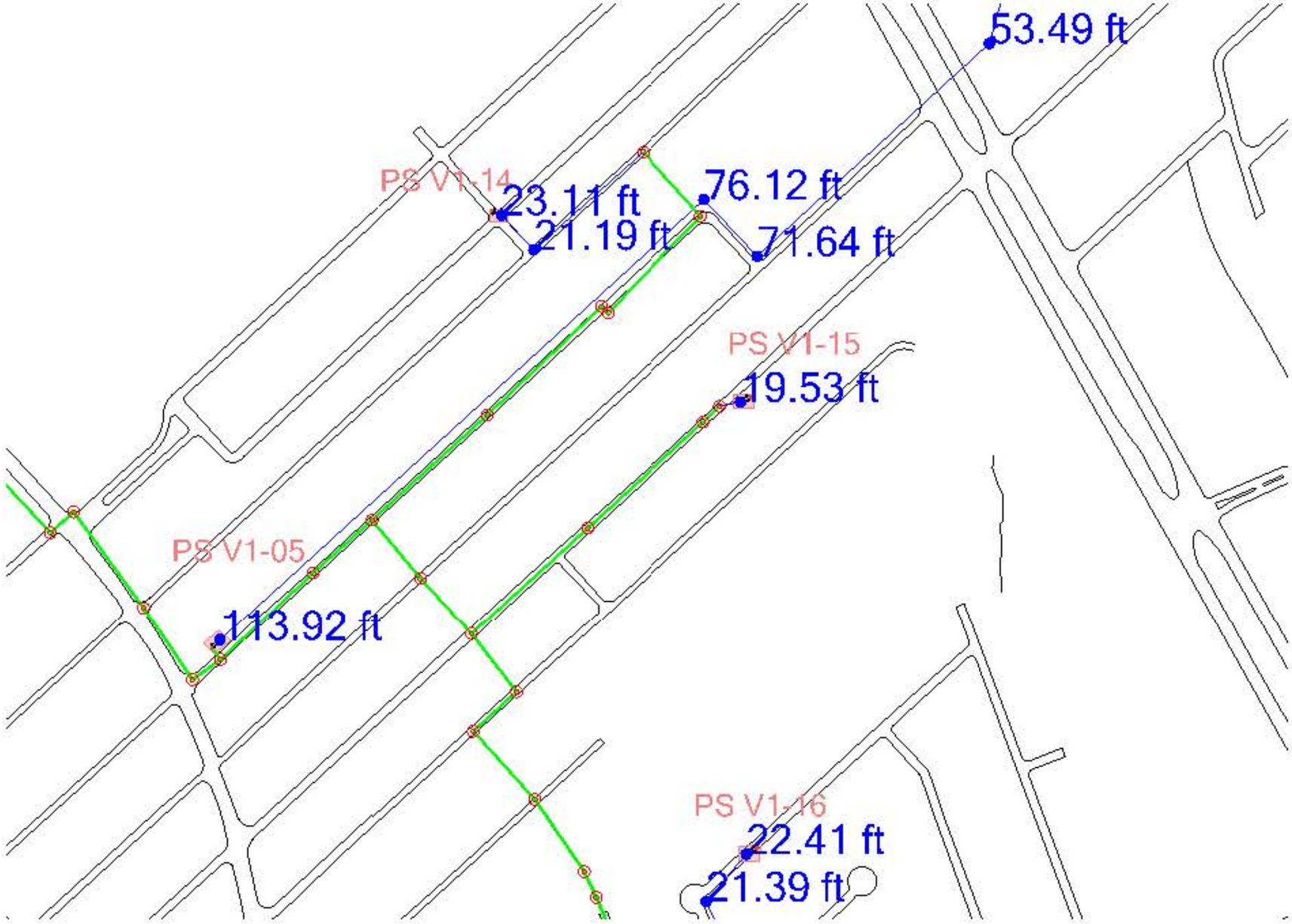

Sewer Sub-Basin 3 (1) Existing Max. Hydraulic Grade Lines (ft.)

Sewer Sub-Basin 3 (2) Existing Max. Hydraulic Grade Lines (ft.)

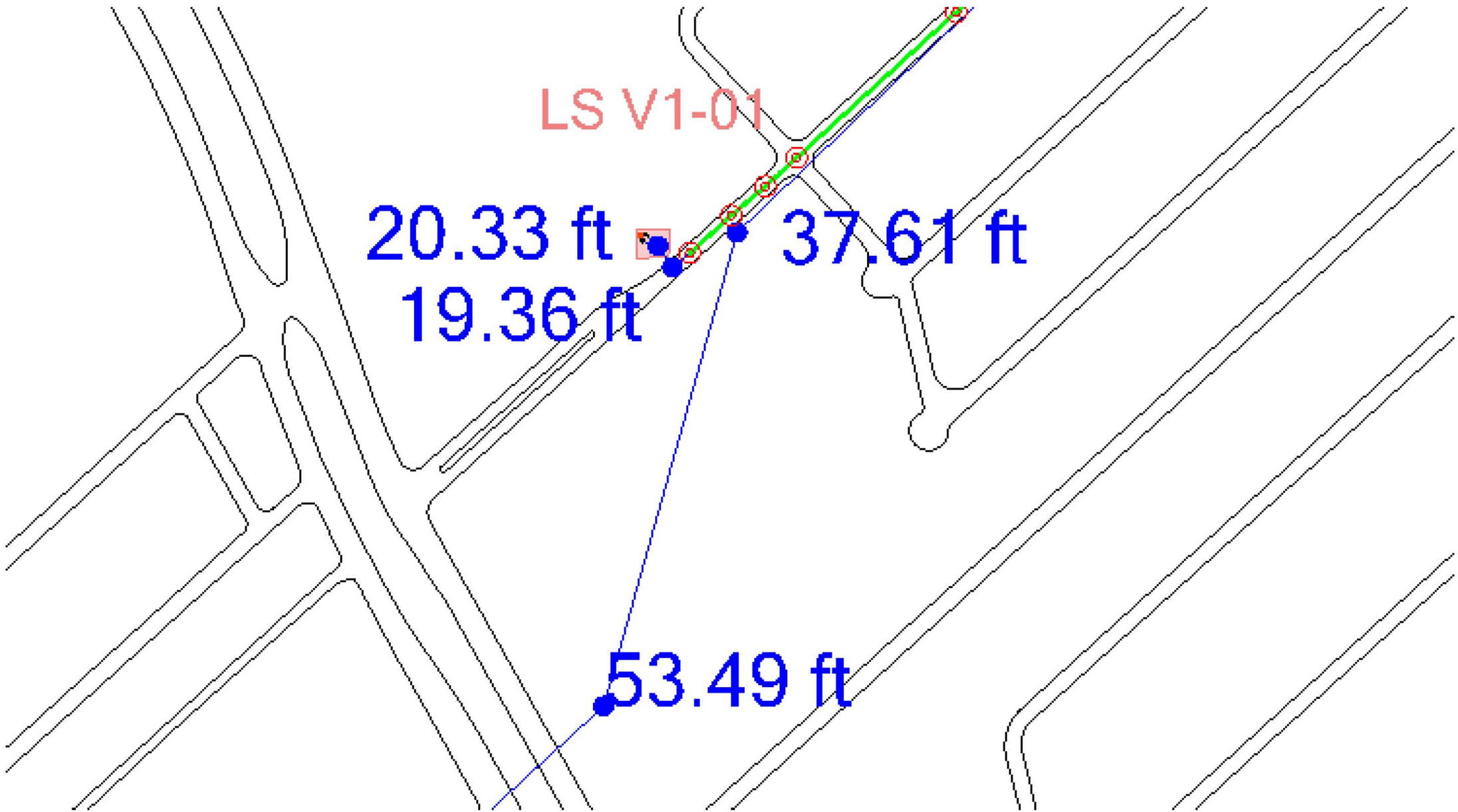

Sewer Sub-Basin 3 (3) Existing Max. Hydraulic Grade Lines (ft.)

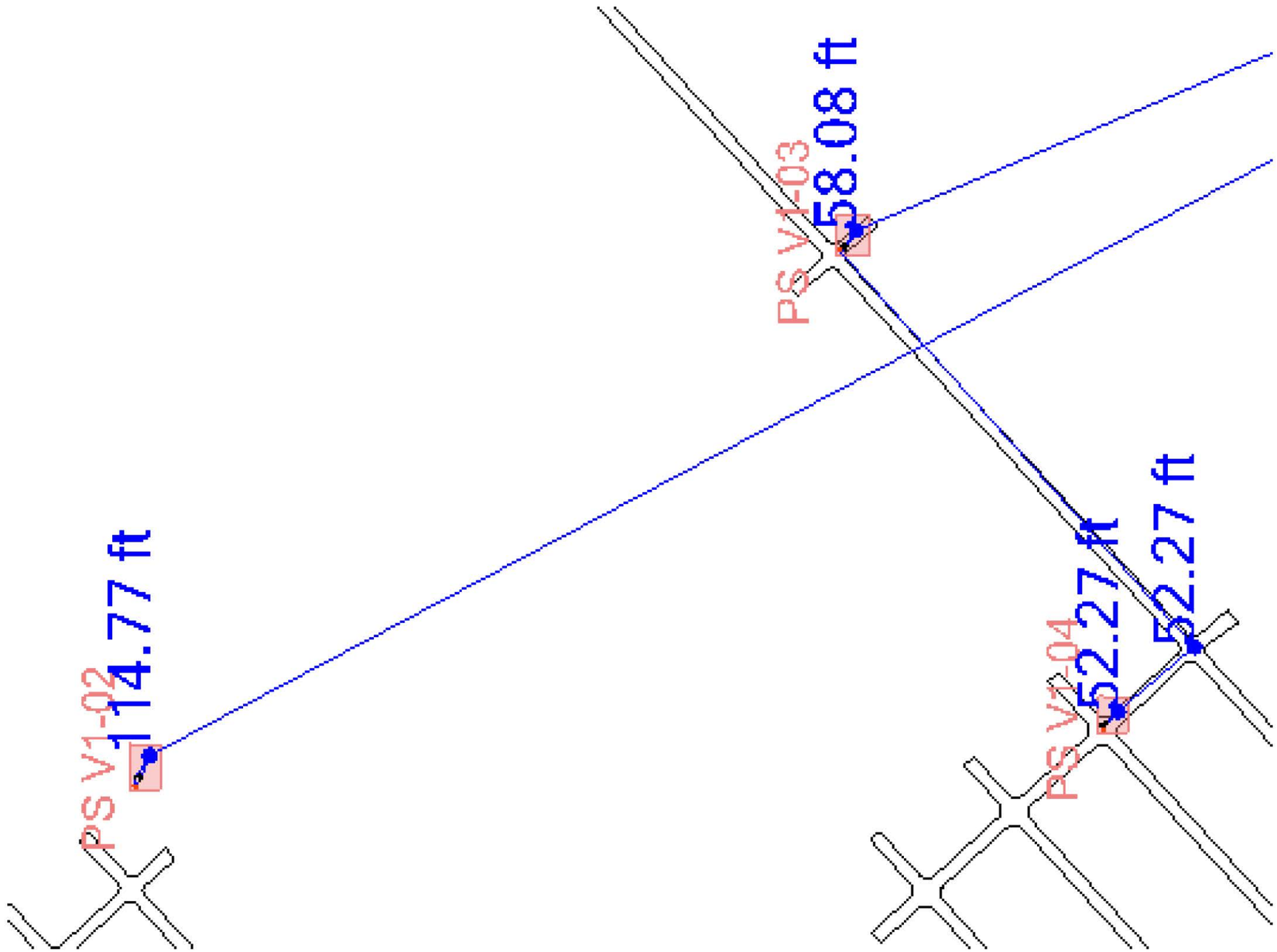

Sewer Sub-Basin 1 Existing Max. Hydraulic Grade Lines (ft.)

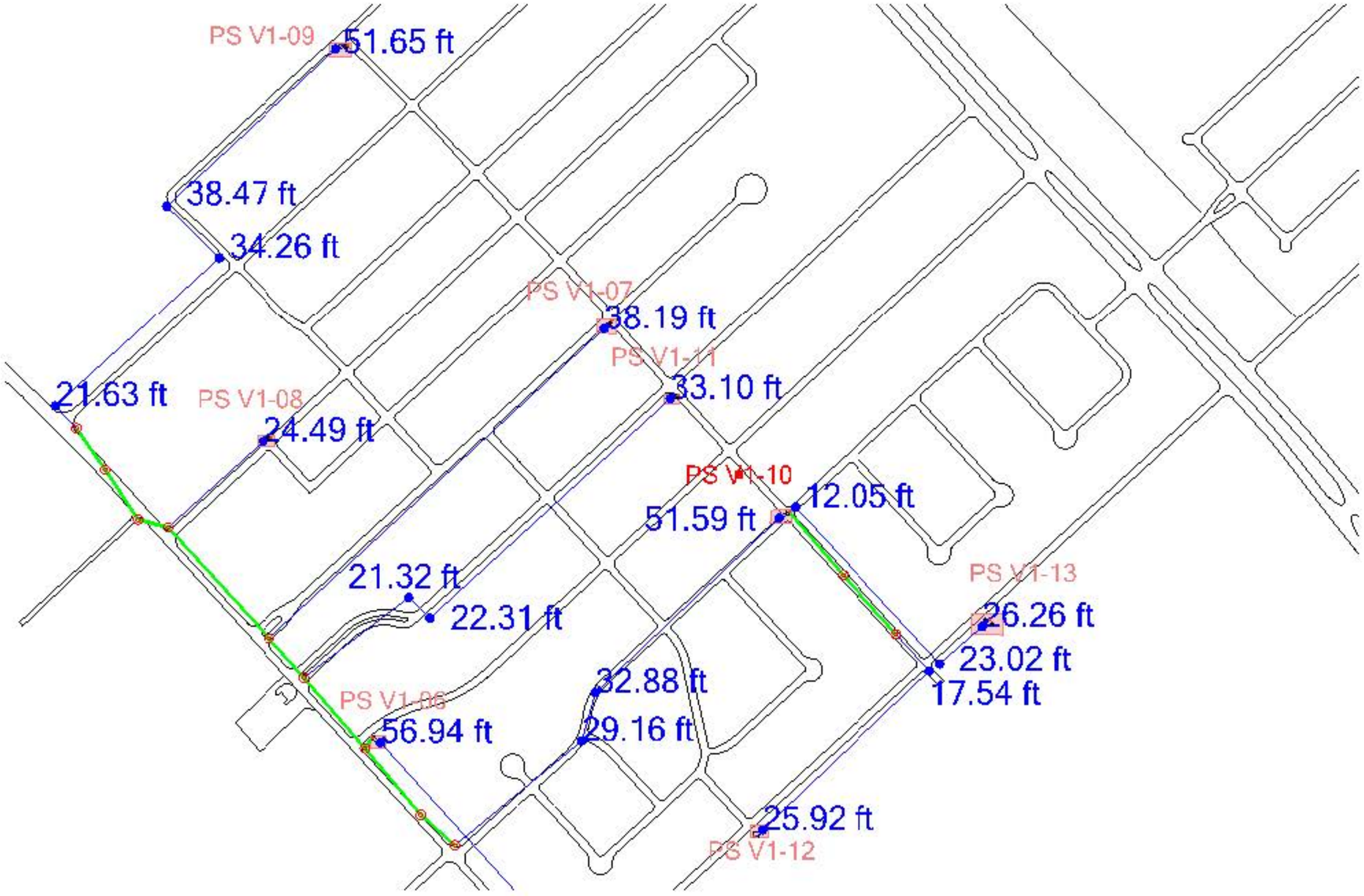

Sewer Sub-Basin 2 POST Max. Hydraulic Grade Lines (ft.)

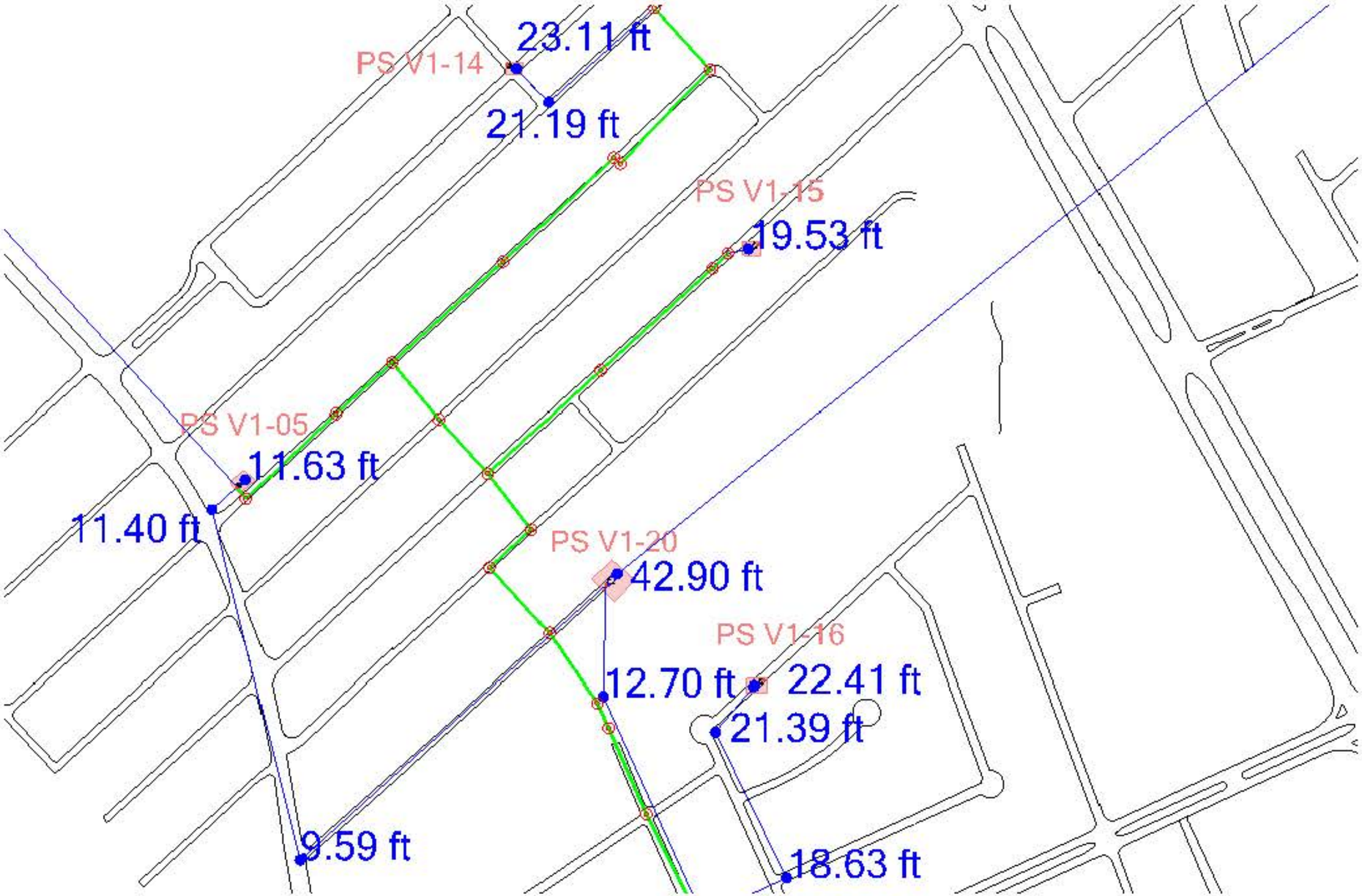

Sewer Sub-Basin 3 (1) POST Max. Hydraulic Grade Lines (ft.)

Sewer Sub-Basin 3 (2) POST Max. Hydraulic Grade Lines (ft.)

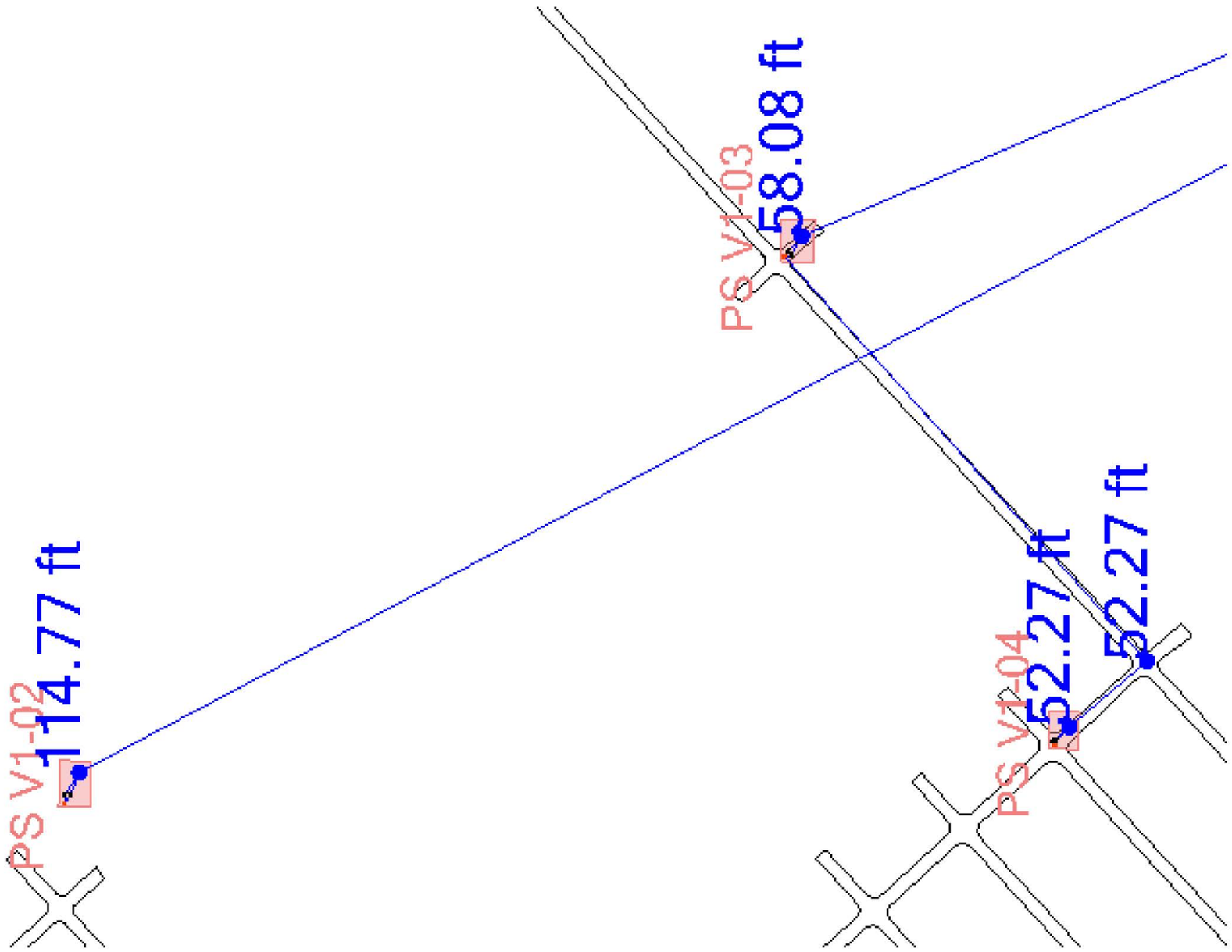

Sewer Sub-Basin 1 POST Max. Hydraulic Grade Lines (ft.)