FOR REVIEW PURPOSES ONLY

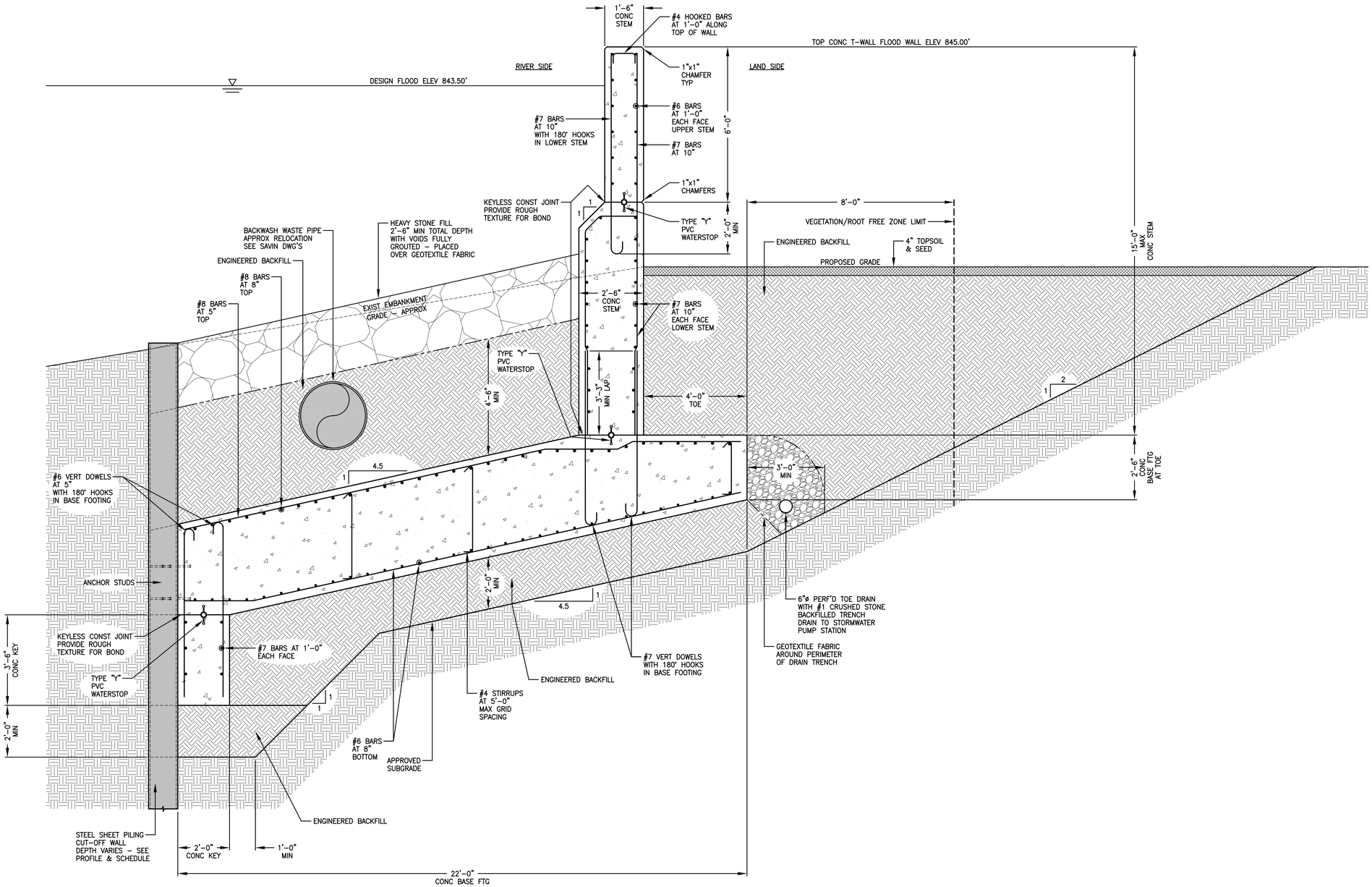

T-WALL TYPE KY-2B

1 / S-6 TYPICAL T-WALL SECTION
SCALE: 1/2"=1'-0"

VEGETATION NOTE:

NO VEGETATION, WITH THE EXCEPTION OF GRASS, SHALL BE PERMITTED WITHIN THE VEGETATION/ROOT-FREE ZONE ADJACENT TO THE RIVER SIDE AND LAND SIDE OF THE FLOOD WALL. THIS ZONE IS REQUIRED FOR MAINTENANCE AND FLOOD-FIGHTING ACTIVITIES AND SHALL BE EASILY ACCESSIBLE AT ALL TIMES.

T-WALL STEM NOTE:

THE STEM THICKNESS SHOWN IS THE MINIMUM DEPTH OF CONCRETE SECTION REQUIRED EXCLUSIVE OF ARCHITECTURAL FORM LINER DEPTHS. IN-THE-EVENT THAT THE OWNER ELECTS TO USE ARCHITECTURAL FORM LINERS, ALL CONCRETE T-WALL STEM FORMED THICKNESSES SHALL BE ADJUSTED AS REQUIRED TO PROVIDE THE MINIMUM DEPTH OF SECTION SHOWN. ALL PERMANANTLY EXPOSED CONCRETE STEM VERTICAL SURFACES SHALL HAVE A SMOOTH FINISH VOID OF TRANSFERRED FORM JOINTS, U.N.O. ALL TOP OF STEM SURFACES SHALL HAVE A LIGHT BROOM FINISH.

SUBGRADE NOTE:

THE SUBGRADE SHALL BE FIELD APPROVED BY A QUALIFIED GEOTECHNICAL ENGINEER AT THE TIME OF EXCAVATION. OVER-EXCAVATION OF THE EXISTING IN SITU SOIL AND REPLACEMENT WITH SUITABLE MATERIAL MAY BE REQUIRED TO MEET BEARING CAPACITY AND PERMEABILITY CRITERIA.

CONCRETE COVER NOTE:

CONCRETE COVER OVER REINFORCEMENT SHALL BE AS FOLLOWS:
CONCRETE SURFACES CAST AGAINST EARTH ..... 4"
CONCRETE FORMED SURFACES PERMANENTLY EXPOSED TO EARTH ... 3"
CLEARANCE OF BARS AT JOINTS AND WATERSTOPS ..... 2"
TYPICAL, UNLESS NOTED OTHERWISE ..... 3"

REINFORCING BAR SPLICE NOTE:

ALL REINFORCING BAR LAP SPLICES SHALL BE CLASS B UNLESS NOTED OTHERWISE.

Woidt Engineering
41 Chenango Street, Suite 200
Binghamton, NY 13901
(607) 722-1014

GRIFFITHS ENGINEERING
13 South Washington Street, Suite 1
Binghamton, New York 13903
Telephone (607) 724-2400
Fax (607) 724-2456

Seal

Designed by: GA
Drawn by: GA
Ckd by: DG
Date: 11-12-2014
Project No: 2012-116
Rev.#
UNAUTHORIZED ALTERATION OF THIS DRAWING IS A VIOLATION OF THE EDUCATION LAW, SECTION 7209, SUBDIVISION 2.
Plot Scale: AS NOTED

Drawing Name: STRUCTURAL SECTIONS 6

Project Location: OLD VESTAL ROAD TOWN OF VESTAL BROOME COUNTY, NY

Project Name: BJC/STP FLOOD WALL

Drawing Reference Number: S-6
X OF X

FOR REVIEW PURPOSES ONLY

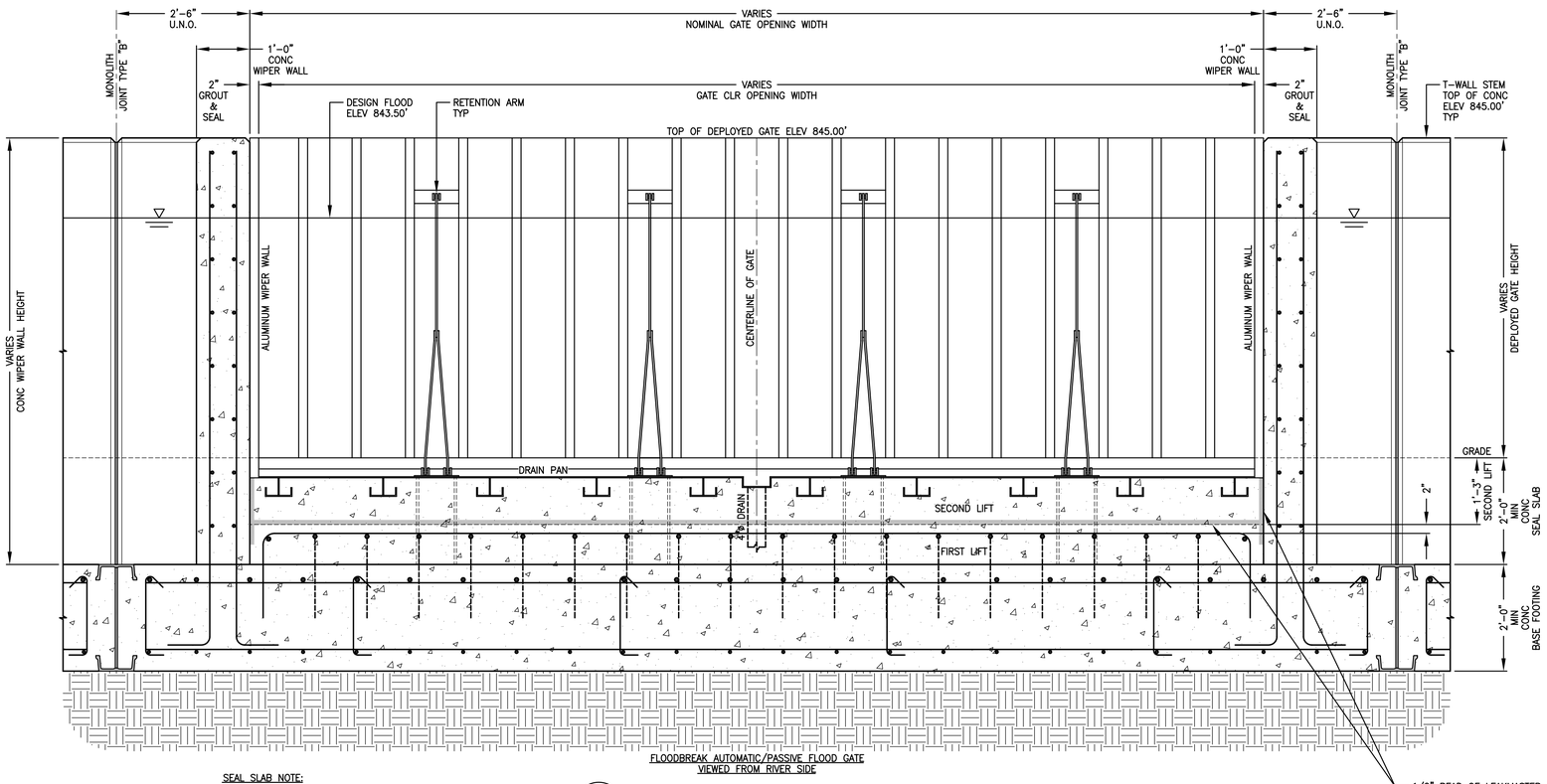

FLOODBREAK AUTOMATIC/PASSIVE FLOOD GATE
VIEWED FROM RIVER SIDE

SEAL SLAB NOTE:

THE CONCRETE SEAL SLAB SHALL BE PLACED IN TWO LIFTS TO ACCOMMODATE FLOOD GATE INSTALLATION LEVELING/ANCHOR BOLTS.

1 / S-7 TYPICAL FLOOD GATE LONGITUDINAL SECTION
SCALE: 3/4"=1'-0"

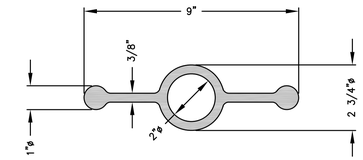

3 / S-7 TYPE "Y" WATERSTOP DETAIL
SCALE: NONE

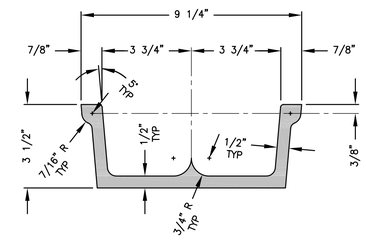

4 / S-7 TYPE "U" WATERSTOP DETAIL
SCALE: NONE

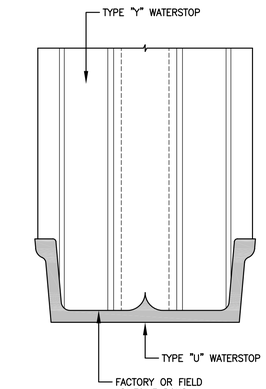

5 / S-7 TYPE "U" & "Y" WATERSTOP INTERSECTION TRANSITION DETAIL
SCALE: NONE

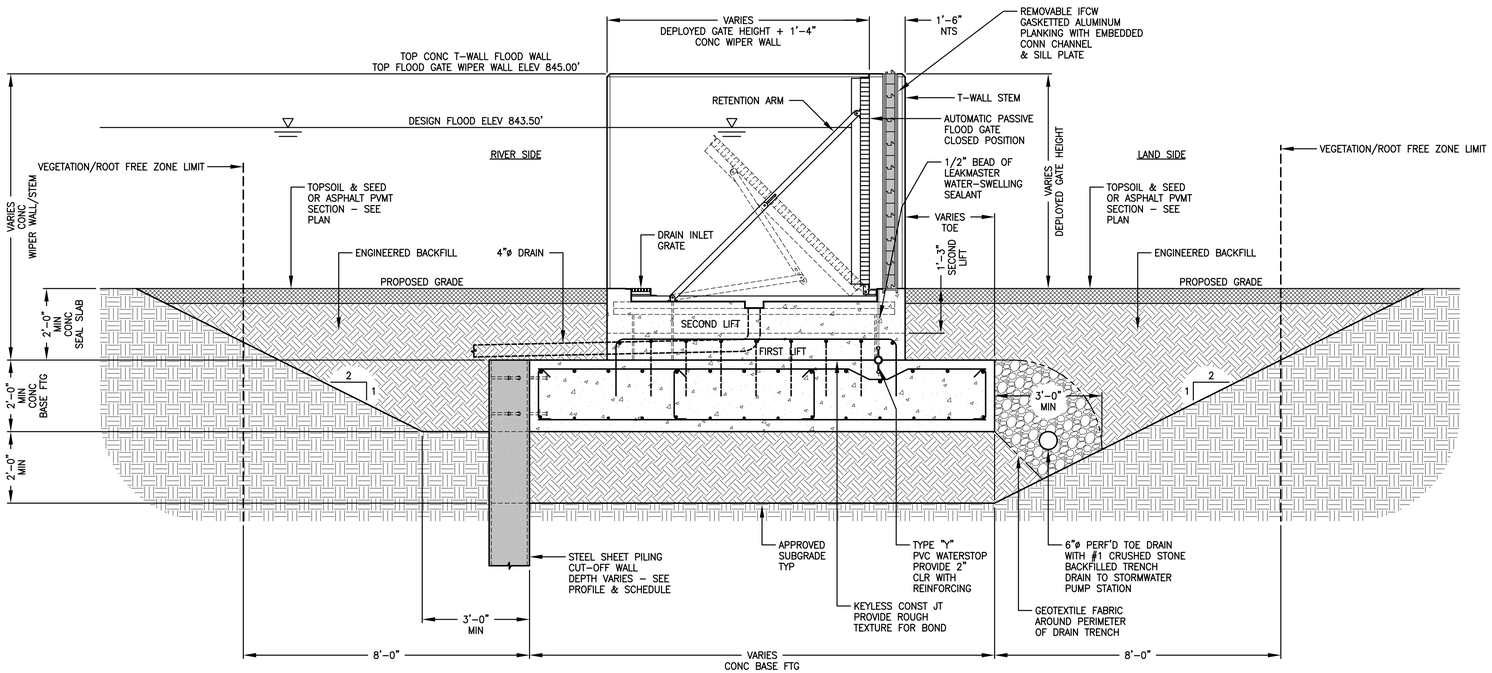

SEAL SLAB NOTE:

THE CONCRETE SEAL SLAB SHALL BE PLACED IN TWO LIFTS TO ACCOMMODATE FLOOD GATE INSTALLATION LEVELING/ANCHOR BOLTS.

FLOODBREAK AUTOMATIC/PASSIVE FLOOD GATE

2 / S-7 TYPICAL FLOOD GATE TRANSVERSE SECTION
SCALE: 1/2"=1'-0"

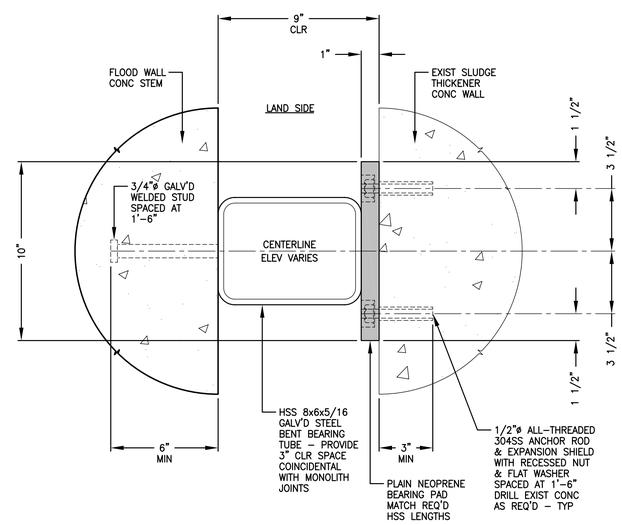

INTERFACE WITH EXIST SLUDGE THICKENER CONC WALL

6 / S-7 STEEL BEARING TUBE DETAIL
SCALE: 3"=1'-0"

Woidt Engineering
41 Chenango Street, Suite 200
Binghamton, NY 13901
(607) 722-1014

GRIFFITHS ENGINEERING
13 South Washington Street, Suite 1
Binghamton, New York 13903
Telephone (607) 724-2400
Fax (607) 724-2456

Seal

Designed by: GA	Date: 11-12-2014
Drawn by: GA	Project No: 2012-116
Chkd by: DG	Plot Scale: AS NOTED

UNAUTHORIZED ALTERATION OF THIS DRAWING IS A VIOLATION OF LAW. SECTION 7209, SUBDIVISION 2.

Drawing Name: STRUCTURAL DETAILS 1

Project Location: OLD VESTAL ROAD TOWN OF VESTAL BROOME COUNTY, NY

Project Name: BJC/STP FLOOD WALL

Drawing Reference Number: S-7
X OF X

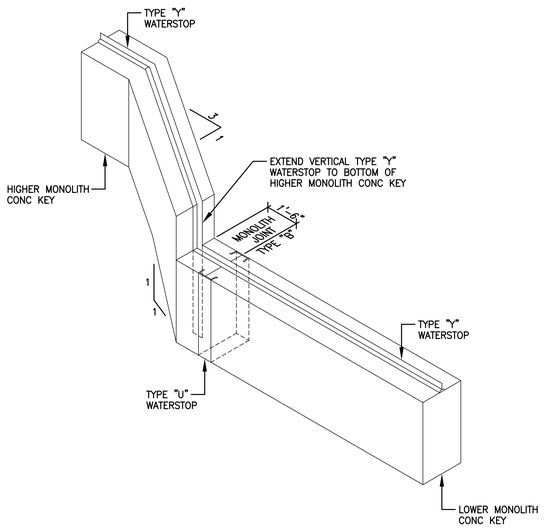

CONCRETE BASE KEY

1 / S-8 ISOMETRIC VIEW
SCALE: NONE

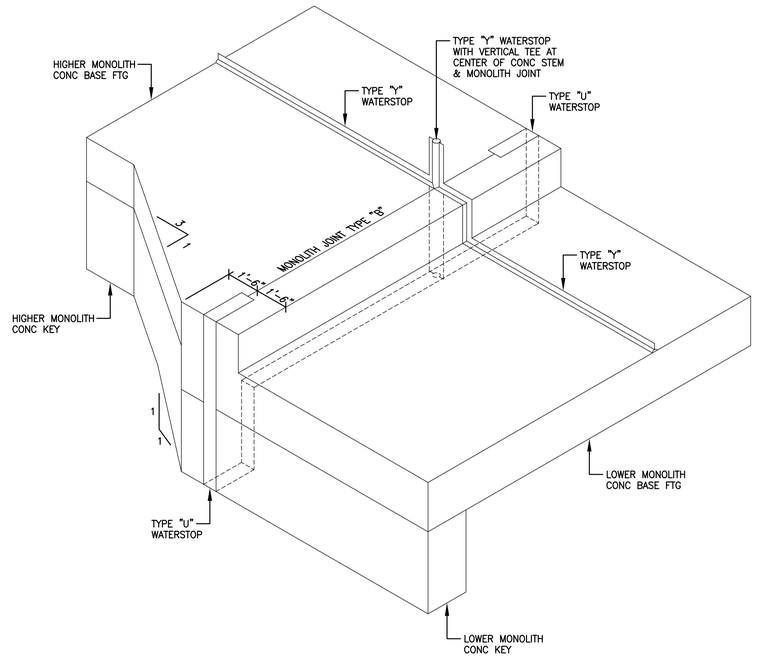

CONCRETE BASE FOOTING
BASE KEYS ONLY AS REQ'D BY T-WALL TYPE

2 / S-8 ISOMETRIC VIEW
SCALE: NONE

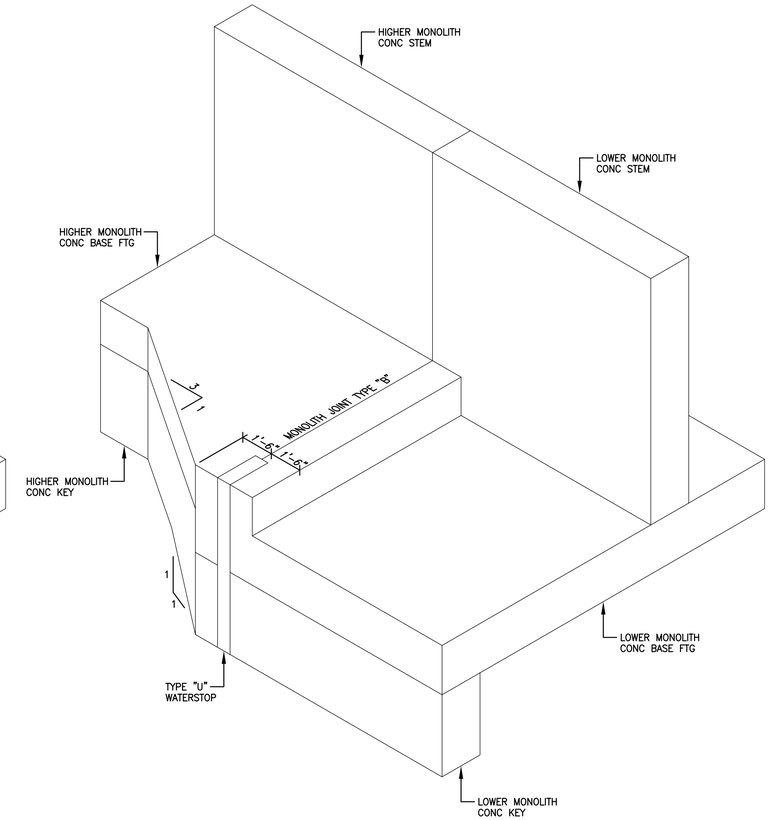

COMPLETED CONCRETE T-WALL
BASE KEYS ONLY AS REQ'D BY T-WALL TYPE

3 / S-8 ISOMETRIC VIEW
SCALE: NONE

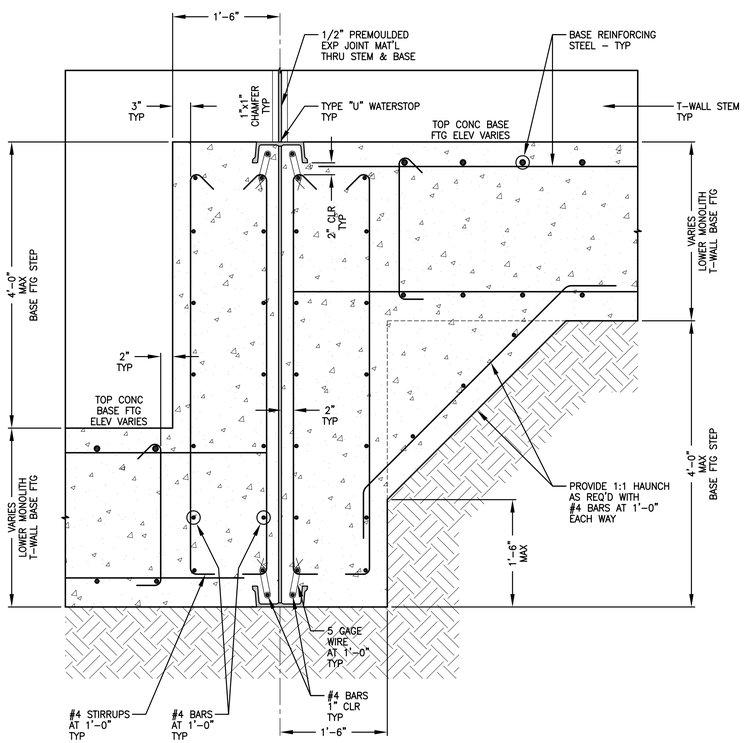

SECTION THRU T-WALL BASE
MONOLITH JOINT TYPE "B" SHOWN
MONOLITH JOINT TYPE "A" SIMILAR
SUBSTITUTE EXP JOINT FILLER WITH BOND BREAKER

4 / S-8 T-WALL BASE FOOTING STEP TYPE "B"
SCALE: 1"=1'-0"

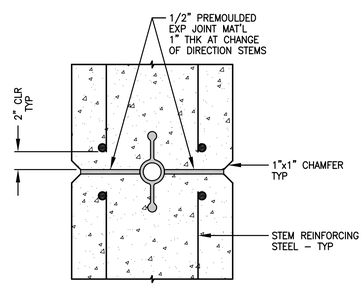

TYPE "Y" WATERSTOP
SECTION THRU T-WALL STEM
MONOLITH JOINT TYPE "B" SHOWN
MONOLITH JOINT TYPE "A" SIMILAR
SUBSTITUTE EXP JOINT FILLER WITH BOND BREAKER

5 / S-8 MONOLITH JOINT TYPE "B" DETAIL
SCALE: 1 1/2"=1'-0"

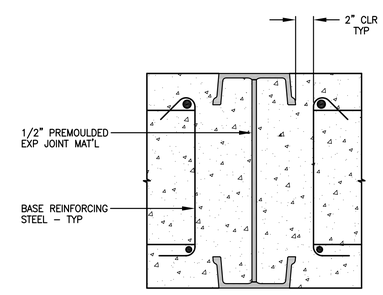

TYPE "U" WATERSTOP
SECTION THRU T-WALL BASE
MONOLITH JOINT TYPE "B" SHOWN
MONOLITH JOINT TYPE "A" SIMILAR
SUBSTITUTE EXP JOINT FILLER WITH BOND BREAKER

6 / S-8 MONOLITH JOINT TYPE "B" DETAIL
SCALE: 1 1/2"=1'-0"

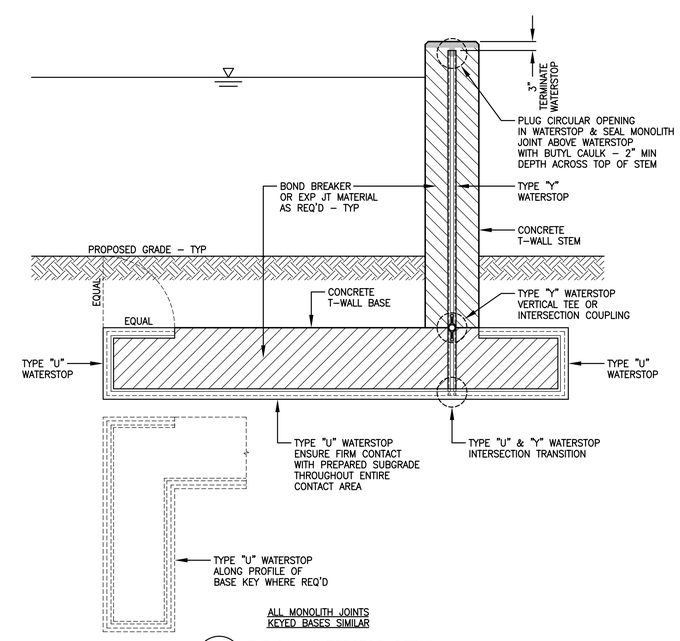

ALL MONOLITH JOINTS
KEYED BASES SIMILAR

7 / S-8 TYPICAL WATERSTOP DETAIL
SCALE: 1/2"=1'-0"

FOR REVIEW PURPOSES ONLY

Woidt Engineering
41 Chenango Street, Suite 200
Binghamton, NY 13901
(607) 722-1014

GRIFFITHS ENGINEERING
13 South Washington Street, Suite 1
Binghamton, New York 13903
Telephone (607) 724-2400
Fax (607) 724-2456

Seal

Date: 11-12-2014	Rev.#
Project No: 2012-116	
Plot Scale: AS NOTED	
Designed by: GA	Drawn by: GA
Cad by: DG	

UNAUTHORIZED ALTERATION OF THIS DRAWING IS A VIOLATION OF THE NEW YORK STATE EDUCATION LAW, SECTION 7209, SUBDIVISION 2.

Drawing Name: STRUCTURAL DETAILS 2

Project Location: OLD VESTAL ROAD TOWN OF VESTAL BROOME COUNTY, NY

Project Name: BJC/STP FLOOD WALL

Drawing Reference Number: S-8
X OF X

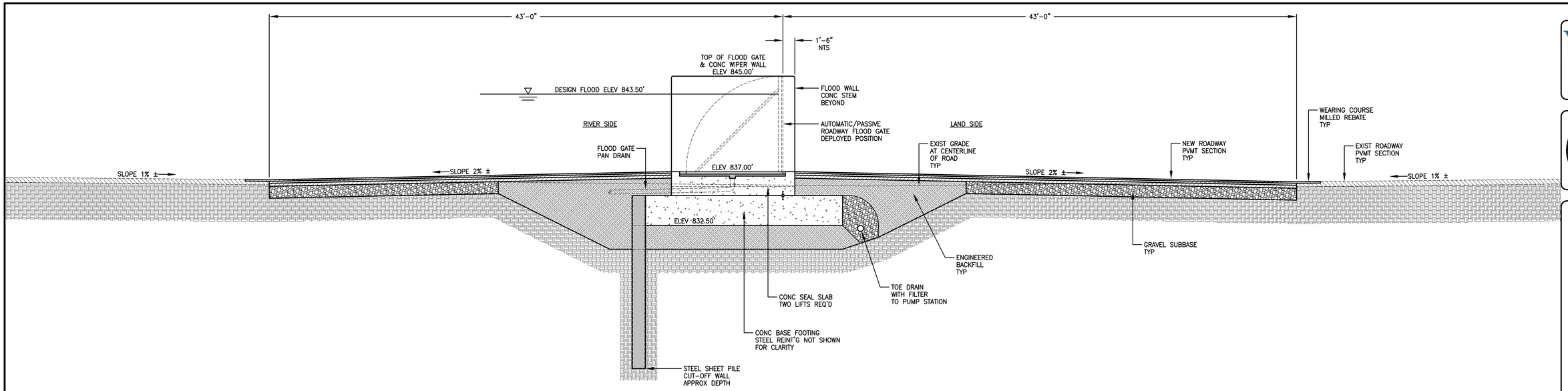

1 / S-9 ROADWAY FLOOD GATE PROFILE SECTION
SCALE: 1/4"=1'-0"

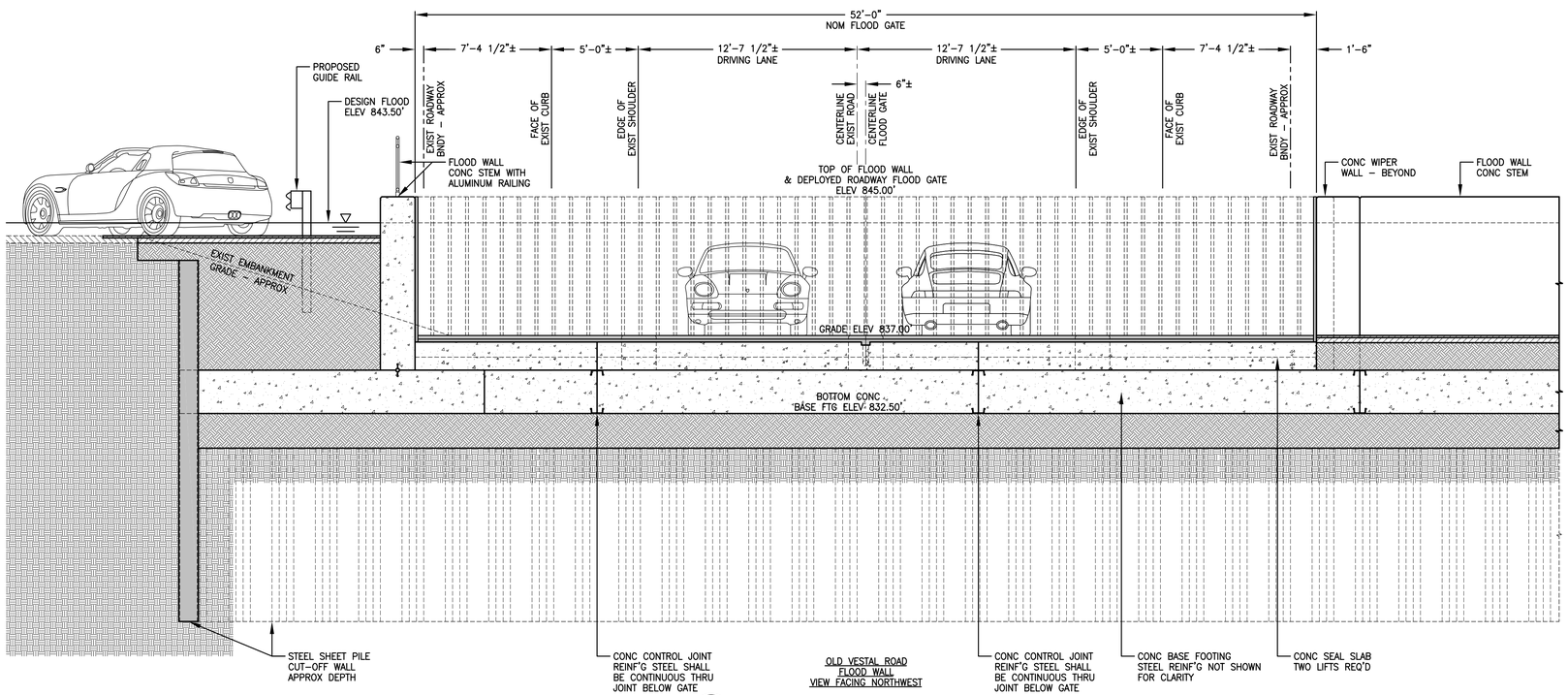

2 / S-9 ROADWAY FLOOD GATE TRANSVERSE SECTION
SCALE: 1/4"=1'-0"

FOR REVIEW PURPOSES ONLY

Woidt Engineering
41 Chenango Street, Suite 200
Binghamton, NY 13901
(607) 722-1014

GRIFFITHS ENGINEERING
13 South Washington Street, Suite 1
Binghamton, New York 13903
Telephone (607) 724-2400
Fax (607) 724-2456

Seal

Designed by: GA	Date: 11-12-2014
Drawn by: GA	Project No: 2012-116
Ckd by: DG	Plot Scale: AS NOTED

Rev.#

UNAUTHORIZED ALTERATION OF THIS DRAWING IS A VIOLATION OF THE STATE EDUCATION LAW, SECTION 7209, SUBDIVISION 2.

Drawing Name: ROADWAY FLOOD GATE SECTIONS

Project Location: OLD VESTAL ROAD TOWN OF VESTAL BROOME COUNTY, NY

Project Name: BJC/STP FLOOD WALL

Drawing Reference Number: S-9
X OF X

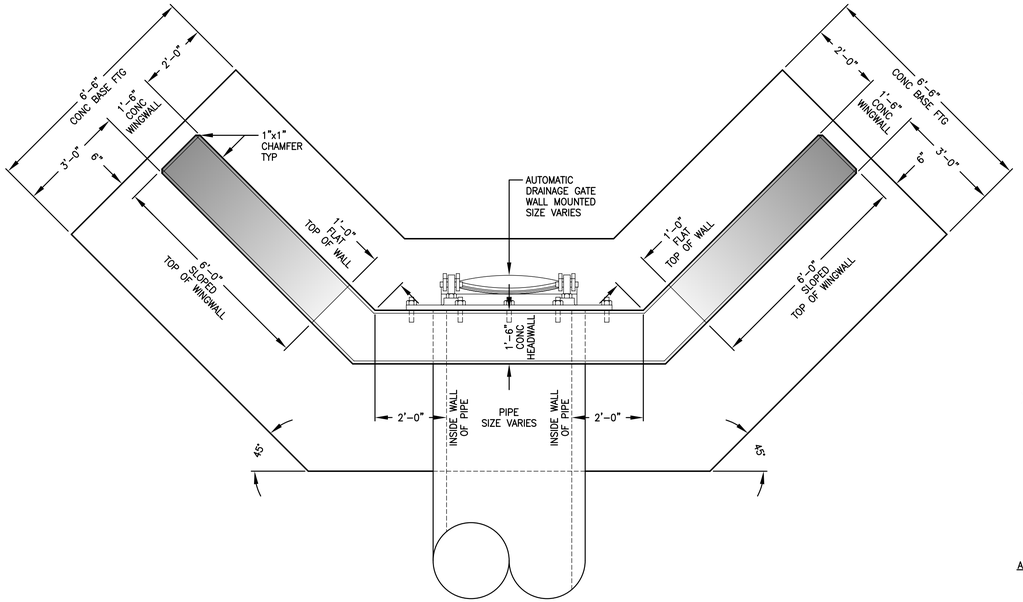

AUTOMATIC DRAINAGE GATE AT RIVER/STREAM OUTLET

1 / S-10 TYPICAL HEADWALL PLAN
SCALE: 1/2"=1'-0"

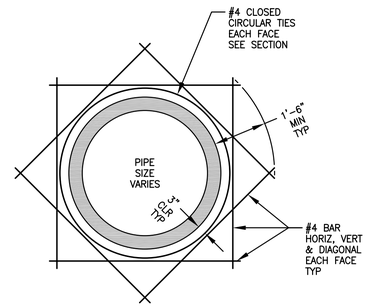

ADDITIONAL REINFORCING BARS AT HEADWALL PENETRATION

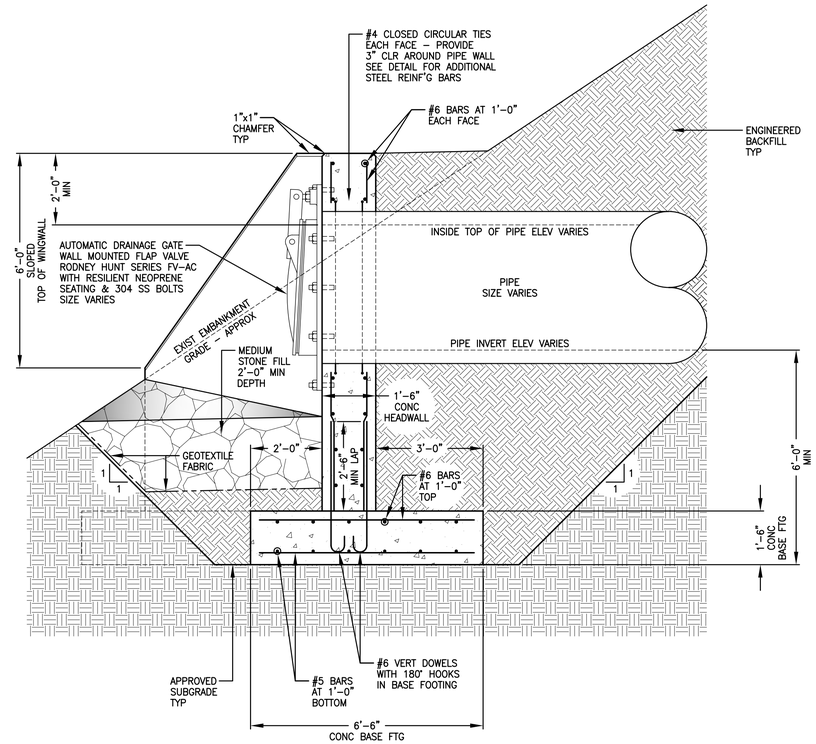

AUTOMATIC DRAINAGE GATE AT RIVER/STREAM OUTLET

2 / S-10 TYPICAL HEADWALL SECTION
SCALE: 1/2"=1'-0"

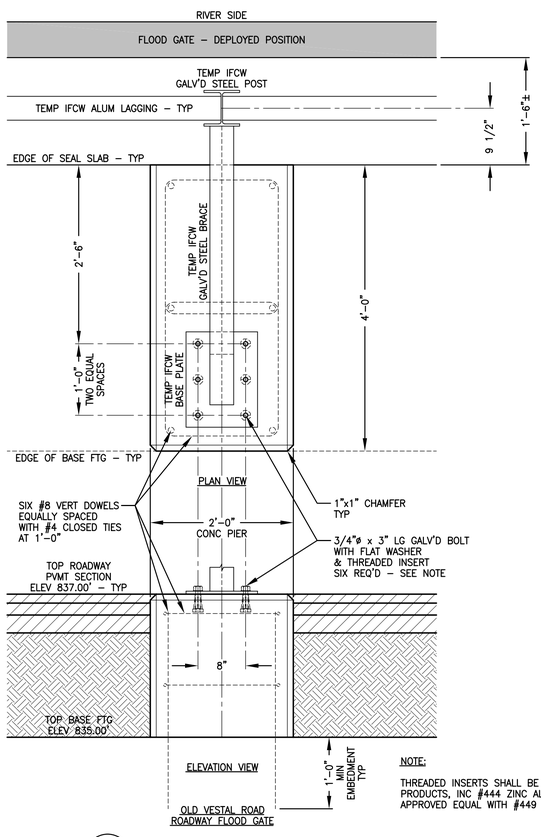

NOTE:

THREADED INSERTS SHALL BE HECKMANN BUILDING PRODUCTS, INC #444 ZINC ALLOY INSERTS OR APPROVED EQUAL WITH #449 BRASS PLUGS.

3 / S-10 IFCW BRACE CONC PIER DETAIL
SCALE: 1"=1'-0"

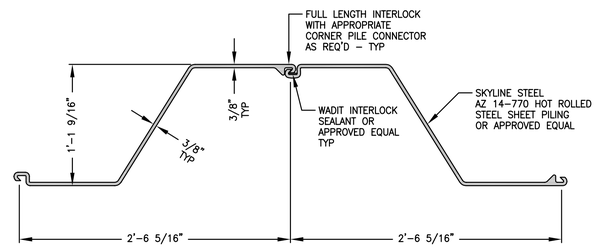

4 / S-10 SHEET PILING SECTION
SCALE: 1 1/2"=1'-0"

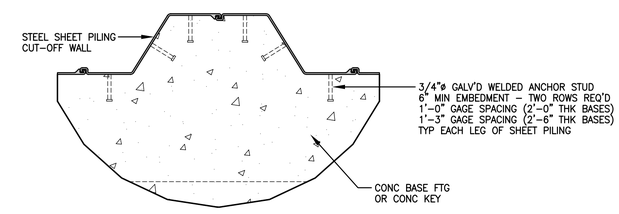

CORRUGATIONS VOID OF MONOLITH JOINTS/WATERSTOPS

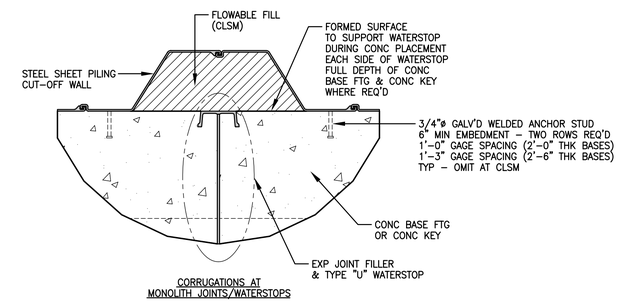

CORRUGATIONS AT MONOLITH JOINTS/WATERSTOPS

5 / S-10 SHEET PILING ANCHOR DETAILS
SCALE: 3/4"=1'-0"

FOR REVIEW PURPOSES ONLY

Woidt Engineering
41 Chenango Street, Suite 200
Binghamton, NY 13901
(607) 722-1014

GRIFFITHS ENGINEERING
13 South Washington Street, Suite 1
Binghamton, New York 13903
Telephone (607) 724-2400
Fax (607) 724-2456

Seal

Date: 11-12-2014	Rev.#
Project No:	2012-116
Plot Scale:	AS NOTED
Designed by: GA	
Drawn by: GA	Cad by: DG

UNAUTHORIZED ALTERATION OF THIS DRAWING IS A VIOLATION OF LAW. SECTION 7209, SUBDIVISION 2.

Drawing Name: MISCELLANOUS STRUCTURAL DETAILS 1

Project Location: OLD VESTAL ROAD TOWN OF VESTAL BROOME COUNTY, NY

Project Name: **BJC/STP FLOOD WALL**

Drawing Reference Number: S-10
X OF X

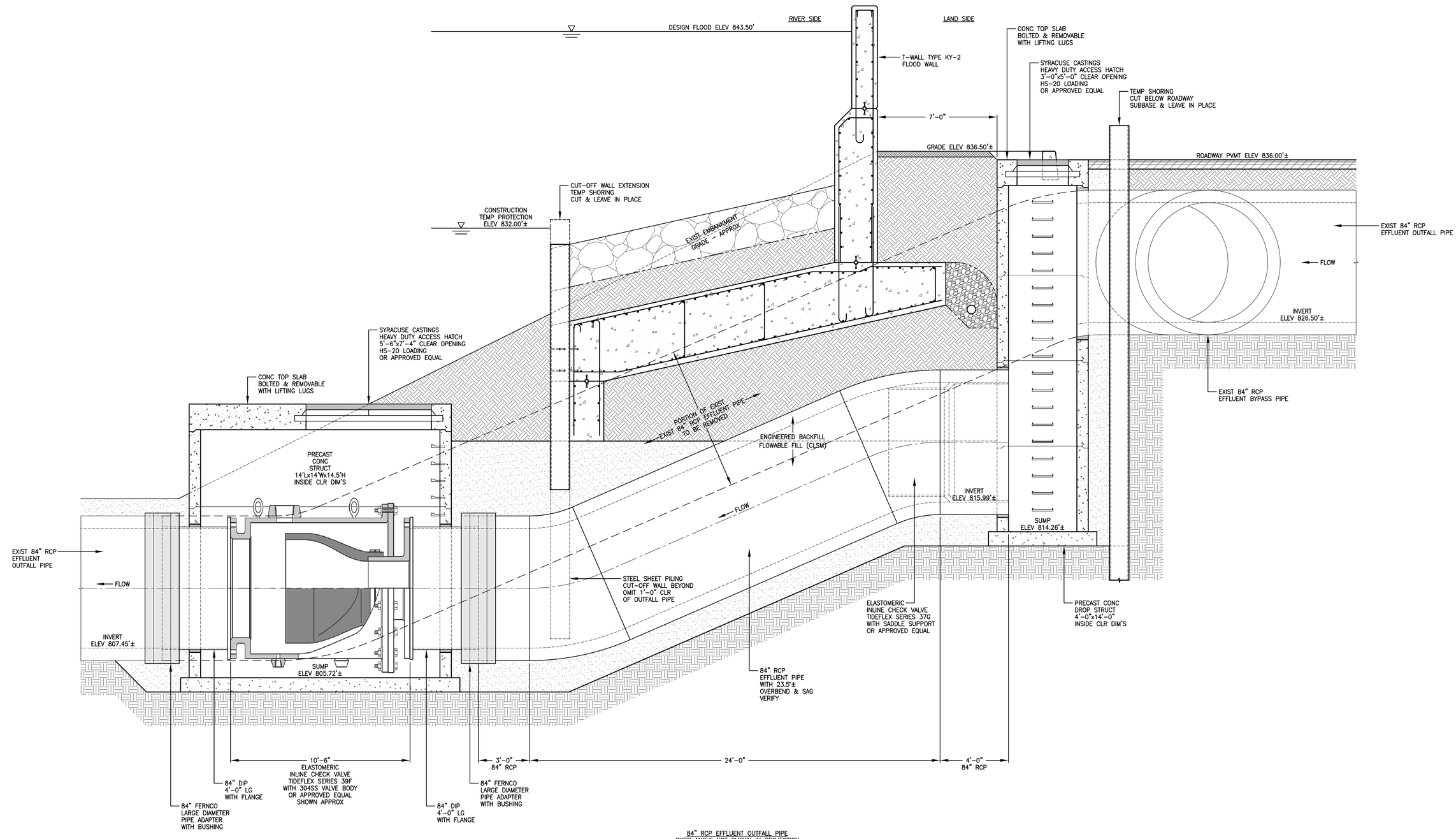

84" RCP EFFLUENT OUTFALL PIPE
SKEW ANGLE NOT SHOWN IN PROJECTION

1 / S-11 PLANT OUTFALL MODIFICATIONS
SCALE: 3/8"=1'-0"

FOR REVIEW PURPOSES ONLY

Woidt Engineering
41 Chenango Street, Suite 200
Binghamton, NY 13901
(607) 722-1014

GRIFFITHS ENGINEERING
13 South Washington Street, Suite 1
Binghamton, New York 13903
Telephone (607) 724-2400
Fax (607) 724-2456

Seal

Designed by: GA	Date: 11-12-2014
Drawn by: GA	Chkd by: DG
Project No.: 2012-116	Rev.#
Plot Scale: AS NOTED	

UNAUTHORIZED ALTERATION OF THIS DRAWING IS A VIOLATION OF THE STATE EDUCATION LAW, SECTION 7209, SUBDIVISION 2.

Drawing Name: MISCELLANOUS STRUCTURAL DETAILS 2

Project Location: OLD VESTAL ROAD
TOWN OF VESTAL
BROOME COUNTY, NY

Project Name: **BJCJSTP FLOOD WALL**

Drawing Reference Number: S-11
X OF X

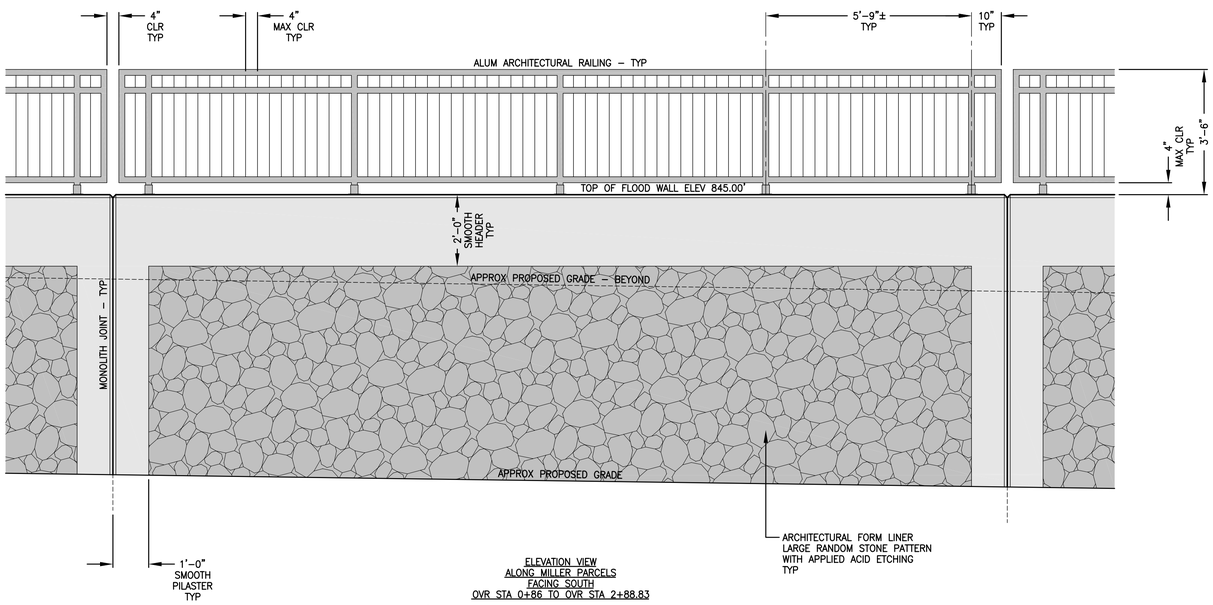

ELEVATION VIEW
ALONG MILLER PARCELS
FACING SOUTH
OVR STA 0+86 TO OVR STA 2+88.83

1 / S-12 ARCHITECTURAL FORM LINER DETAILS
SCALE: 1/2"=1'-0"

FOR REVIEW PURPOSES ONLY

Woidt Engineering
41 Chenango Street, Suite 200
Binghamton, NY 13901
(607) 722-1014

GRIFFITHS ENGINEERING
13 South Washington Street, Suite 1
Binghamton, New York 13903
Telephone (607) 724-2400
Fax (607) 724-2456

Seal

Designed by: GA
Drawn by: GA
Cad by: DG
Date: 11-12-2014
Project No: 2012-116
Rev.#
Plot Scale: AS NOTED

UNAUTHORIZED ALTERATION OF THIS DRAWING IS A VIOLATION OF THE NEW YORK STATE EDUCATION LAW, SECTION 7209 SUBDIVISION 2

Drawing Name: MISCELLANOUS STRUCTURAL DETAILS 3

Project Location: OLD VESTAL ROAD
TOWN OF VESTAL
BROOME COUNTY, NY

Project Name: **BJC.ISTP FLOOD WALL**

Drawing Reference Number: S-12
X OF X

STRUCTURAL NOTES

GENERAL

G-1 THESE NOTES ARE GENERAL AND SUPPLEMENTAL TO THE SPECIFICATIONS. THESE NOTES APPLY TO THE ENTIRE PROJECT UNLESS MODIFIED OR NOTED OTHERWISE IN THE CONTRACT DOCUMENTS.

G-2 STANDARD DETAILS, SHOWN ON DRAWINGS S-DT-01 THRU S-DT-03, SHALL BE USED WHEN REFERRED TO OR WHEN NO MORE RESTRICTIVE OR DIFFERENT DETAILS ARE SHOWN ON THE DRAWINGS.

G-3 DESIGN WAS IN ACCORDANCE WITH AND CONSTRUCTION SHALL COMPLY WITH THE PROVISIONS OF THE BUILDING CODE OF NEW YORK STATE (BCNYS). THE DESIGN LOADS AND OTHER DESIGN VALUES GIVEN BELOW WERE USED FOR THE DESIGN OF STRUCTURES UNO ON THE DRAWINGS.

G-4 LIVE LOADS:

STORMWATER PUMP STATIONS:	H-20
TERMINAL PUMP STATION ELECTRICAL BUILDING:	150 PSF
TERMINAL PUMP STATION GENERATOR PAD AREA:	250 PSF
TERMINAL PUMP STATION MEDIUM VOLTAGE EQUIPMENT AREA:	250 PSF

G-5 SNOW LOADS:
- GROUND SNOW LOAD, Pg = 40 PSF
- FLAT ROOF SNOW LOAD, Pf = 35 PSF
- SNOW EXPOSURE FACTOR, Ce = 1.0
- SNOW LOAD IMPORTANCE FACTOR, I = 1.1
- THERMAL FACTOR, Ct = 1.0

G-6 WIND DESIGN:
- BASIC WIND SPEED, V = 90 MPH
- WIND IMPORTANCE FACTOR, I = 1.15
- BUILDING CATEGORY III
- WIND EXPOSURE CATEGORY C
- INTERNAL PRESSURE COEFFICIENT, GCpi = ±0.18

G-7 SEISMIC DESIGN:
- SEISMIC USE GROUP, III
- SPECTRAL RESPONSE COEFFICIENTS:
  - SDS = 0.21
  - SD1 = 0.12
- SITE CLASS D
- SEISMIC DESIGN CATEGORY B
- SEISMIC IMPORTANCE FACTOR I = 1.25

G-8 ALL DIMENSIONS INDICATED (*) ARE TO BE VERIFIED EITHER BY FIELD MEASUREMENTS FOR EXISTING STRUCTURES OR BY SHOP DRAWINGS FOR EQUIPMENT FURNISHED. STRUCTURAL DIMENSIONS NOT SHOWN BUT CONTROLLED BY OR RELATED TO EQUIPMENT SHALL BE VERIFIED BY THE CONTRACTOR WITH THE MANUFACTURER PRIOR TO CONSTRUCTION.

G-9 STRUCTURAL DRAWINGS SHALL BE USED IN COORDINATION WITH THE DRAWINGS OF ALL OTHER DISCIPLINES AND MANUFACTURER'S SHOP DRAWINGS.

G-10 IF A CONFLICT IS FOUND BETWEEN DIFFERENT PORTIONS OF THE CONTRACT DOCUMENTS, THE CONTRACTOR SHALL NOTIFY THE ENGINEER IMMEDIATELY. CONTINUED CONSTRUCTION OF THE AREA IN CONFLICT SHALL BE AT THE CONTRACTOR'S OWN RISK UNTIL THE CONFLICT IS RESOLVED BY THE ENGINEER.

G-11 WHENEVER ONE MEMBER IS FASTENED TO ANOTHER WITH FASTENINGS (BOLTS, WELDS, ETC.) SET AT A UNIFORM SPACING, THERE SHALL BE A MINIMUM OF TWO FASTENINGS PER PIECE CONNECTED AND THE FIRST AND LAST FASTENINGS SHALL BE LOCATED NOT TO EXCEED 0.25 OF FASTENER SPACING FROM EACH END.

G-12 STRUCTURES HAVE BEEN DESIGNED FOR OPERATIONAL LOADS ON THE COMPLETED STRUCTURE. DURING CONSTRUCTION, THE STRUCTURES SHALL BE PROTECTED BY BRACING AND TEMPORARY SUPPORTS WHEREVER EXCESSIVE CONSTRUCTION LOADS MAY OCCUR. OVERSTRESSING OF ANY STRUCTURAL ELEMENT IS PROHIBITED.

G-13 NO BACKFILL SHALL BE PLACED AGAINST ANY WALL UNLESS ALL SUPPORTING ELEMENTS OF THE STRUCTURE HAVE BEEN CONSTRUCTED AND HAVE REACHED THE SPECIFIED MINIMUM CONCRETE STRENGTH.

G-14 THE CONTRACTOR IS RESPONSIBLE FOR VERIFYING ALL EXISTING INFORMATION IN THE FIELD AS REQUIRED FOR NEW WORK.

G-15 ALL LADDERS AND RAILS SHALL BE DESIGNED TO MEET OSHA REQUIREMENTS AND ALL FEDERAL, STATE AND CITY CODES, REGULATIONS AND REQUIREMENTS.

G-16 ALL LADDERS SHALL BE CENTERED ON HATCH/PRECAST PLANK ABOVE.

FOUNDATIONS

F-1 DESIGN ASSUMPTIONS:
A) ALLOWABLE BEARING PRESSURE: 1. SOUND ROCK - 8 TSF, 2. OVERBURDEN - 1 TSF.
B) GROUNDWATER: EXISTING GROUNDWATER ELEVATIONS VARY ACROSS SITE.

F-2 GRAVITY UNDERDRAINS SHALL BE PROVIDED TO PERMANENTLY LOWER GROUNDWATER.

F-3 CONCRETE GENERAL NOTES APPLY TO FOUNDATIONS.

F-4 MINIMUM DEPTH FROM ADJACENT FINISHED GRADE TO BOTTOM OF FOUNDATION, 3'-6", UNO.

F-5 FOUNDATIONS BEARING ON ROCK SHALL BE CONSTRUCTED SUCH THAT ROCK SURFACE IS LEVEL, UNLESS APPROVED BY ENGINEER.

F-6 COMPACTED SELECT GRANULAR FILL 12 INCHES THICK MINIMUM, SHALL BE PLACED BELOW ALL CONCRETE FOUNDATIONS UNLESS DIRECTLY BEARING ON SOUND ROCK.

EXCAVATION

E-1 CONTRACTOR SHALL PERFORM ALL EXCAVATION IN ACCORDANCE WITH STATE, LOCAL AND FEDERAL REQUIREMENTS INCLUDING OSHA BRACING AND EXCAVATION REQUIREMENTS.

E-2 TEMPORARY SHEETING AND BRACING IS NOT SHOWN ON CONTRACT DRAWINGS. ALL EXCAVATIONS WITH A POTENTIAL FOR CAVE-IN SHALL BE PROVIDED WITH EXCAVATION PROTECTION SYSTEMS IN ACCORDANCE WITH OSHA 1926. SLOPING AND BENCHING WHICH WILL ENCROACH ON AREAS SLATED TO REMAIN ACCESSIBLE OR THAT MAY ENCROACH ON EXISTING FOOTINGS AND STRUCTURES SHALL NOT BE PERMITTED.

E-3 CONTRACTOR SHALL ENGAGE THE SERVICES OF A LICENSED PROFESSIONAL ENGINEER REGISTERED IN THE STATE OF NEW YORK TO DESIGN ALL TEMPORARY SHEETING AND BRACING AND RELATED APPURTENANCES. CONTRACTOR TO SUBMIT SUCH PLANS TO ENGINEER FOR APPROVAL.

STRUCTURAL METALS

S-1 DETAIL, FABRICATE, AND ERECT STRUCTURAL STEEL IN ACCORDANCE WITH AISC SPECIFICATION FOR STRUCTURAL STEEL BUILDINGS, ALLOWABLE STRESS DESIGN AND LRFD DESIGN (LRFD MANUAL OF STEEL CONSTRUCTION, CURRENT EDITION).

S-2 STEEL MATERIAL:
A) STRUCTURAL TUBING, ASTM A 500, GRADE B
B) STRUCTURAL PIPE, ASTM A 53, GRADE B
C) PLATES AND ANGLES, ASTM A 36 UNO
D) STRUCTURAL W SHAPES, ASTM A 992 (MIN. YIELD STRENGTH OF 50 KSI).
E) STRUCTURAL S, M, & H SHAPES ASTM A572 GRADE 50

S-3 PROVIDE MIN 3/4" DIAMETER ASTM A 325 HIGH STRENGTH BOLTS WITH FULLY TIGHTENED TYPE N CONNECTIONS FOR STRUCTURAL STEEL UNO.

S-4 PROVIDE TYPICAL STEEL BEAM CONNECTIONS FOR A CAPACITY NOT LESS THAN THE TOTAL UNIFORM LOAD CAPACITY TABULATED IN THE AISC TABLES FOR ALLOWABLE LOADS OF BEAMS UNLESS NOTED OTHERWISE.

S-5 CAST-IN-PLACE ANCHOR BOLTS FOR STRUCTURAL STEEL SHALL CONFORM TO ASTM A307 UNO.

S-6 DO NOT PAINT STEEL SURFACES WHICH ARE TO BE WELDED OR ARE TO BE ENCASED IN CONCRETE.

S-7 STAINLESS STEEL SHALL BE TYPE 316 FOR BOLTED CONSTRUCTIONS AND 316L FOR WELDED CONSTRUCTIONS.

S-8 ALUMINUM SHALL BE ALLOY 6061-T6.

S-9 ALL GROOVE AND BUTT WELDS SHALL BE FULL PENETRATION.

S-10 FILLET WELD SIZES SHALL BE THE MINIMUM SIZE REQUIRED BY AISC CODE FOR PLATE SIZES TO BE CONNECTED AND SHALL BE APPLIED TO THE ENTIRE JOINT CONTACT LENGTH, BUT NOT LESS THAN 3/16".

S-11 DETAIL, FABRICATE, AND ERECT ALUMINUM IN ACCORDANCE WITH THE ALUMINUM ASSOCIATION CONSTRUCTION MANUAL CURRENT EDITION.

S-12 ALL BOLTS, ANCHOR BOLTS, AND CONCRETE ANCHORS CONNECTING ALUMINUM SHALL BE TYPE 316 STAINLESS STEEL UNO.

S-13 ALUMINUM SHALL BE ISOLATED FROM CONTACT WITH CONCRETE OR DISSIMILAR METALS.

MASONRY

M-1 CONCRETE MASONRY UNITS SHALL CONFORM TO ASTM C90. THE TOTAL MASONRY ASSEMBLAGE SHALL HAVE A COMPRESSIVE STRENGTH EQUAL TO 1500 PSI AT 28 DAYS.

M-2 MASONRY MORTAR SHALL CONFORM TO ASTM C270, TYPE S.

M-3 ALL BOND BEAMS AND ANY BLOCK CELLS CONTAINING EMBEDMENTS, REINFORCING STEEL, ANCHORS, ETC., SHALL BE FILLED WITH GROUT FILL MEETING THE REQUIREMENTS OF ASTM C476.

M-4 BOND BEAM REINF. SHALL BE CONTINUOUS AT CORNERS AND INTERSECTIONS.

M-5 ALL INTERIOR MASONRY WALLS SHALL EXTEND TO UNDERSIDE OF THE EXISTING ROOF OR NEW SLAB ABOVE, UNO. PROVIDE MASONRY ANCHORS FROM THE TOP COURSE OF ALL INTERIOR MASONRY WALLS TO THE BEAM OR SLAB ABOVE, UNO. ALL HEIGHTS OF NEW MASONRY WALLS TO BE VERIFIED IN FIELD.

CONCRETE (EXCEPT PRECAST)

C-1 CONCRETE STRENGTH CLASSES (28-DAY COMPRESSIVE STRENGTH):
- CLASS A (5000 PSI) STRUCTURES, REINFORCED DUCT BANKS, AND PIPE ENCASEMENT.
- CLASS D (2500 PSI) SIDEWALKS, CURBS AND GUTTERS, CONCRETE FILL, THRUST BLOCKS, UNREINFORCED DUCT BANKS AND PIPE ENCASEMENT, FENCE POST EMBEDMENT.

C-2 REINFORCEMENT: ASTM A615, GRADE 60, OR ASTM A706, GRADE 60 WHERE REINFORCEMENT IS TO BE WELDED.

C-3 CONCRETE COVER FOR REINFORCING:
A) SURFACES CAST AGAINST SUBGRADE 3" MIN
B) FORMED SURFACES IN CONTACT WITH SOIL OR LIQUID 2" MIN
C) SURFACES NOT IN CONTACT WITH WEATHER, SOIL, OR LIQUID 1 1/2" MIN

C-4 CONSTRUCTION JOINTS & CONTROL JOINTS SHALL BE LOCATED AS SHOWN ON THE DRAWINGS. WHERE NOT SHOWN, CONSTRUCTION JOINTS SHALL BE LOCATED AT NO MORE THAN 30 FEET ON CENTER. JOINT LOCATIONS SHALL BE AS APPROVED BY THE ENGINEER.

C-5 EQUIPMENT SUPPORTS, ANCHORAGES, OPENINGS, RECESSES AND REVEALS NOT SHOWN ON THE STRUCTURAL DRAWINGS BUT REQUIRED BY OTHER DISCIPLINES, SHALL BE PROVIDED FOR PRIOR TO PLACING CONCRETE.

C-6 SPLICES SHALL BE CLASS 'B' CONFORMING TO THE PROVISIONS OF ACI 318 UNLESS NOTED OTHERWISE.

C-7 AT ALL TYPICAL CURBS, EQUIPMENT PADS, AND PIPE SUPPORT PIERS, REINFORCING DOWELS SHOWN MAY BE REPLACED WITH MATCHING DOWELS SET IN EPOXY IN DRILLED HOLES AS SPECIFIED. DOWELS LOCATED CLOSER THAN 3" FROM ANY EDGE OF CONCRETE SHALL NOT BE REPLACED WITH DRILLED DOWELS.

C-8 DRILLED EPOXY DOWELS (WHERE DOWELS ARE SHOWN TO BE PLACED INTO HARDENED CONCRETE):
A) THE HOLE DIAMETER SHALL BE NO LARGER THAN 1/8" GREATER THAN THE DIAMETER OF THE REINFORCING BAR AT THE DEFORMATIONS.
B) THE DEPTH OF EMBEDMENT SHALL BE 12 BAR DIAMETERS, UNLESS SHOWN OTHERWISE.
C) ADJUST THE DOWEL LOCATIONS AS NEEDED TO AVOID DRILLING THROUGH ANY REINFORCING BARS. IF THE DOWEL LOCATION NEEDS TO BE MODIFIED, CONTACT THE ENGINEER.

C-9 SLABS WITH SLOPING SURFACES SHALL HAVE THE INDICATED SLAB THICKNESS MAINTAINED AS THE MINIMUM. SLAB BOTTOMS CAN EITHER SLOPE WITH THE TOP SURFACE OR BE LEVEL. REINFORCEMENT IN SLABS WITH SLOPING SURFACES SHALL BE PLACED AT THE REQUIRED CLEARANCE FROM THE SLAB SURFACE.

C-10 SLOPES SHOWN ON SLAB SURFACES BY FLOW ARROWS SHALL BE 1.0 PERCENT UNLESS NOTED OTHERWISE.

C-11 WHERE HORIZONTAL CONSTRUCTION JOINTS, LOCATED ABOVE THE FOUNDATION SLAB, EXTEND BEYOND WHERE NEEDED, THEY SHALL BE TERMINATED AT A VERTICAL CONSTRUCTION JOINT APPROVED BY THE ENGINEER.

C-12 DOWELS, ANCHOR BOLTS, PIPES, WATERSTOPS AND OTHER EMBEDDED ITEMS SHALL BE HELD SECURELY IN POSITION WHILE CONCRETE IS BEING PLACED.

C-13 CONDUITS AND OTHER SIMILAR ITEMS EMBEDDED IN OR PENETRATING THROUGH CONCRETE SHALL BE SPACED ON CENTER NOT LESS THAN 3 TIMES THEIR OUTSIDE DIMENSION, BUT NOT LESS THAN 2 1/2" CLEAR IN CLASS A CONCRETE OR 2" CLEAR IN CLASS D CONCRETE. SUCH ITEMS SHALL NOT EXCEED 1/3 OF THE MEMBER THICKNESS.

C-14 REINFORCING BARS AND ACCESSORIES SHALL NOT BE IN CONTACT WITH ANY METAL PIPE, PIPE FLANGE, METAL CONDUIT, OR OTHER METAL PARTS EMBEDDED IN CONCRETE. A MINIMUM CLEARANCE OF 2 INCHES SHALL BE PROVIDED.

C-15 ALL JOINTS WHICH ARE IN MEMBERS IN CONTACT WITH LIQUID OR BELOW GRADE SHALL HAVE A WATERSTOP CONSTRUCTION JOINTS SHALL HAVE A 6" PVC FLAT STRIP WATERSTOP. EXPANSION JOINTS SHALL HAVE A 9" PVC CENTER BULB WATERSTOP.

C-16 IN VERTICAL JOINTS, WATERSTOP SHALL STOP NO LESS THAN 18" ABOVE THE MAXIMUM WATER SURFACE OR 18" ABOVE GRADE, WHICHEVER IS HIGHER.

C-17 AT JOINT INTERSECTIONS, WATERSTOPS SHALL BE CONNECTED SO AS TO FORM A COMPLETE SEAL USING CONNECTION PIECES AS NEEDED.

C-18 ALL EXPOSED CORNERS SHALL HAVE A 3/4" CHAMFER OR A 1/2" RADIUS TOOLED CORNER.

C-19 ALL SURFACES OF EXISTING CONCRETE RECEIVING NEW CONCRETE SHALL BY PREPARED BY CLEANING, ROUGHENING AND TREATMENT WITH AN EPOXY BONDING AGENT. CONCRETE SHALL BE PLACED WHILE EPOXY IS TACKY TO PREVENT BOND BREAK.

C-20 ALL SURFACES AT RECENTLY PLACED CONCRETE RECEIVING NEW CONCRETE SHALL BE PREPARED BY CLEANING, WETTING, AND TREATMENT WITH A NEAT CEMENT GROUT.

C-21 ALL EXISTING DOWELS THAT WILL BE USED IN NEW CONSTRUCTION SHALL BE THOROUGHLY CLEANED.

STRUCTURAL ABREVIATIONS

AB	ANCHOR BOLT
ADDL	ADDITIONAL
ADH	ADHESIVE
ADJ	ADJUSTABLE/ADJACENT
AFF	ABOVE FINISHED FLOOR
AGG	AGGREGATE
AL	ALUMINUM
ALT	ALTERNATE
APPROX	APPROXIMATE
ARCH	ARCHITECTURAL
AVG	AVERAGE
B	BORING
BLDG	BUILDING
BM	BEAM/BENCH MARK
BOF	BOTTOM OF FOOTING
BOS	BOTTOM OF STEEL
BOT	BOTTOM
BRG	BEARING
BT	BOLT
C	CHANNEL
C TO C	CENTER TO CENTER
CANT	CANTILEVER
CJ	CONSTRUCTION JOINT
CL	CENTER LINE
CLR	CLEAR
CMU	CONCRETE MASONRY UNIT
CO	CLEAN OUT
COL	COLUMN
CONC	CONCRETE
CONST	CONSTRUCTION
CONT	CONTINUOUS
CONTR	CONTRACTOR
CP	CONCRETE PLANK
CLJ	CONTROL JOINT
CTR	CENTER
CY	CUBIC YARD
DET	DETAIL
DIA (ø)	DIAMETER
DIAG	DIAGONAL
DIM	DIMENSION
DIST	DISTANCE
DN	DOWN
DO	DITTO
DP	DEEP
DWG	DRAWING
DWL	DOWEL
E	EAST
EA	EACH
EF	EACH FACE
EL	ELEVATION
ELEV	ELEVATOR
ENGR	ENGINEER
EMB	EMBEDMENT
ENCL	ENCLOSURE
ENT	ENTRANCE
EQ	EQUAL
EQPT	EQUIPMENT
EW	EACH WAY
EXIST	EXISTING
EXP	EXPANSION
EXP JT	EXPANSION JOINT
EXT	EXTERIOR
FAB	FABRICATE
FD	FLOOR DRAIN
FDN	FOUNDATION
FFL	FINISH FLOOR
FIN	FINISH
FLR	FLOOR
FT	FEET
FTG	FOOTING
F&C	FRAME&COVER
F&G	FRAME&GRATE
GA	GAUGE
GALV	GALVANIZE
GB	GRADE BEAM
GR	GRADE
GRTG	GRATING
HGT	HEIGHT
HORZ	HORIZONTAL
HP	HIGH POINT
HSS	HOLLOW STRUCTURAL STEEL
ID	INSIDE DIAMETER
IF	INSIDE FACE
IN	INCH
INCL	INCLUDE
INT	INTERIOR
INV	INVERT
J	JOIST
JB	JUNCTION BOX
JCT	JUNCTION
JT	JOINT
L	LENGTH/ANGLE
LF	LINEAR FEET
LG	LONG
LL	LIVE LOAD
LLH	LONG LEG HORIZONTAL
LLV	LONG LEG VERTICAL
LOC	LOCATION
LP	LOW POINT
LVR	LOUVER
LWL	LOW WATER LEVEL
MAS	MASONRY
MATL	MATERIAL
MAX	MAXIMUM
MECH	MECHANICAL
MET	METAL
MFR	MANUFACTURER
MG	MILLION GALLONS
MGD	MILLION GALLONS PER DAY
MH	MANHOLE
MIN	MINIMUM
MISC	MISCELLANEOUS
MO	MASONRY OPENING
MOD	MODIFY/MODIFIED
MTD	MOUNTED
N	NORTH
NA	NOT APPLICABLE
NIC	NOT IN CONTRACT
NO	NUMBER
NOM	NOMINAL
NTS	NOT TO SCALE
OC	ON CENTER
OD	OUTSIDE DIAMETER
OF	OUTSIDE FACE
OPNG	OPENING
OPP	OPPOSITE
OT	OPEN TRUSS
OVHD	OVERHEAD
PAR	PARALLEL
PC	POINT OF CURVE/PIECE
PCO	PILE CUT OFF
PI	POINT OF INTERSECTION
PL	PLATE/PROPERTY LINE
PREFAB	PREFABRICATED
PSF	POUNDS PER SQUARE FOOT
PSI	POUNDS PER SQUARE INCH
PT	POINT OF TANGENCY
PTN	PARTITION
PVMT	PAVEMENT
QTY	QUANTITY
R	RISER
RAD	RADIUS
RCP	REINFORCED CONCRETE PIPE
RD	ROOF DRAIN
REINF	REINFORCEMENT
RECT	RECTANGULAR
REM	REMOVE
REQD	REQUIRED
RF	ROOF
RO	ROUGH OPENING
S	SOUTH
SCHED	SCHEDULE
SECT	SECTION
SF	SQUARE FEET
SHT	SHEET
SIM	SIMILAR
SJ	STEEL JOIST
SPEC	SPECIFICATION
SQ	SQUARE
SS	STAINLESS STEEL
STA	STATION
STD	STANDARD
STR	STAIR
STIF	STIFFENER
STIR	STIRRUP
STL	STEEL
STRUC	STRUCTURAL
SUB	SUBSTITUTE
SYM	SYMMETRICAL
T	TREAD
T&B	TOP AND BOTTOM
T&G	TONGUE AND GROOVE
TAN	TANGENT
TEMP	TEMPERATURE
THK	THICK
TOC	TOP OF CURB/CONCRETE
TOD	TOP OF DECK
TOF	TOP OF FOOTING
TOM	TOP OF MASONRY/MANHOLE
TOS	TOP OF SLAB/STEEL
TOW	TOP OF WALL
TYP	TYPICAL
UNO	UNLESS NOTED OTHERWISE
VERT	VERTICAL
W	WEST/WIDTH/WIDE FLANGE
W/	WITH
W/O	WITHOUT
WL	WATER LEVEL
WP	WATERPROOF/WALL PIPE
WPT	WALL PENETRATING TYPE
WS	WATER SURFACE
WT	WEIGHT
WWF	WELDED WIRE FABRIC
YD	YARD
YR	YEAR

SYMBOLS

- UNDISTURBED EARTH
- COMPACTED BACKFILL
- SELECT GRANULAR FILL MATERIAL
- CONCRETE BLOCK
- BRICK
- FINISHED WOOD
- CONCRETE
- ROUGH WOOD
- RIGID INSULATION
- REINFORCED STEEL IN CONCRETE
- WELDED WIRE FABRIC
- BLANKET INSULATION
- STEEL
- CRUSHED STONE

SAVIN ENGINEERS, P.C.
3 CAMPUS DRIVE
PLEASANTVILLE, NY 10570

GRIFFITHS

GRIFFITHS ENGINEERING
13 South Washington Street, Suite 1
Binghamton, New York 13903
Telephone (607) 724-2400
Fax (607) 724-2456

Seal

Designed by: .	Date: .	Rev.# .	
Drawn by: .	Ckd by: DG	Project No.: 2012-116	
UNAUTHORIZED ALTERATION OF THIS DRAWING IS A VIOLATION OF THE NEW YORK STATE EDUCATION LAW, SECTION 7209, SUBDIVISION 2.		Plot Scale: AS NOTED	

Drawing Name: **STRUCTURAL NOTES, SYMBOLS,AND ABBREVIATIONS**

Project Location: OLD VESTAL ROAD, TOWN OF VESTAL, BROOME COUNTY, NY

Project Name: **BJCJSTP FLOOD WALL**

Drawing Reference Number: **S-G-01**

OF

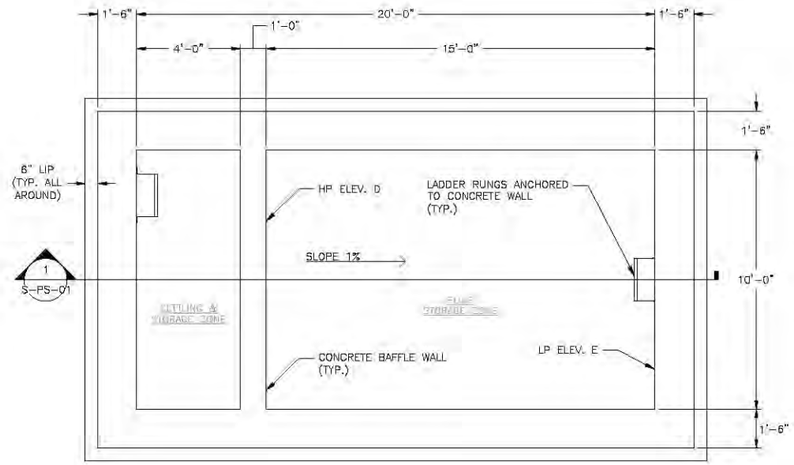

1 STORMWATER PUMP STATION 1+2 – LOWER PLAN
Scale: 3/8" = 1'-0"
SCALE: 3/8" = 1'-0"

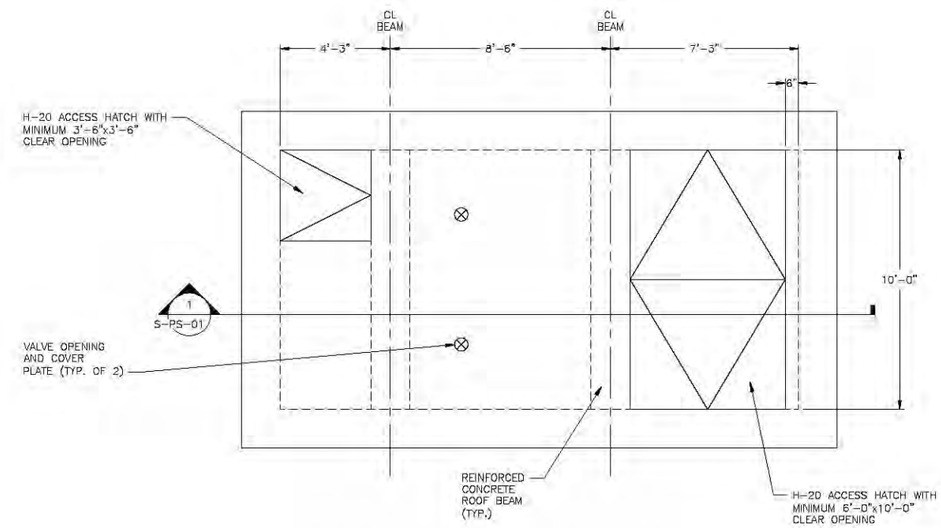

2 STORMWATER PUMP STATION 1+2 – UPPER PLAN
Scale: 3/8" = 1'-0"
SCALE: 3/8" = 1'-0"

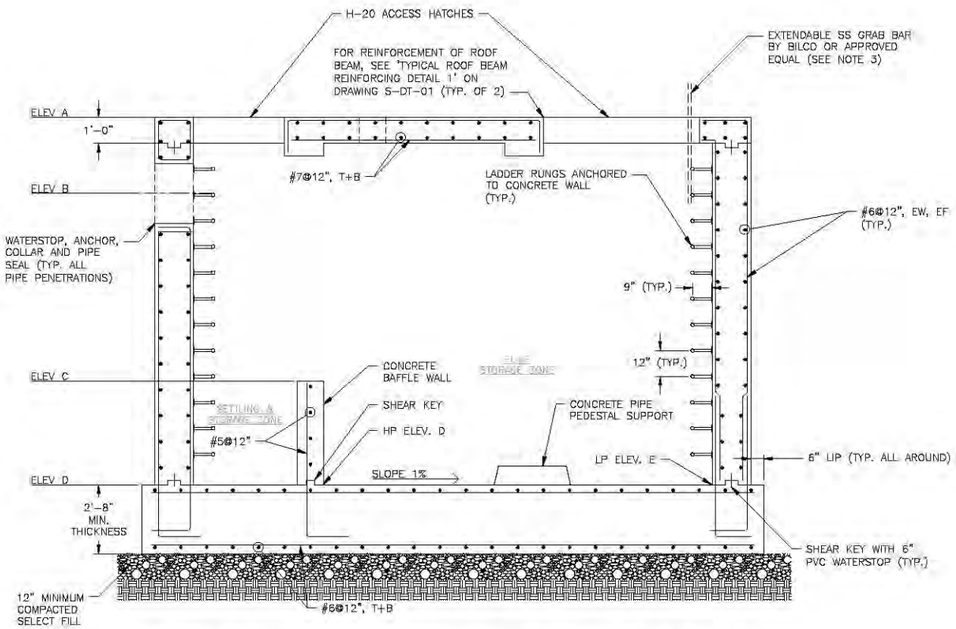

1 S-PS-01 STORMWATER PUMP STATION 1+2 – SECTION
Scale: 3/8" = 1'-0"
SCALE: 3/8" = 1'-0"

ELEVATION SCHEDULE					
FACILITY	MARK				
	ELEV A	ELEV B	ELEV C	ELEV D	ELEV E
PUMP STATION NO. 1	836.50	833.50	826.33	822.33	822.18
PUMP STATION NO. 2	833.00	827.50	822.33	818.33	818.18

NOTES:

1. COORDINATE WITH M-DRAWINGS FOR ADDITIONAL PIPE PENETRATIONS NOT SHOWN.
2. FOR PUMP STATION LOCATION AND ORIENTATION, SEE SITE PLANS.
3. EXTENDABLE GRAB BAR SHALL BE STAINLESS STEEL, AND IT SHALL COMPLY WITH OSHA STANDARDS.

SAVIN ENGINEERS, P.C.
3 CAMPUS DRIVE
PLEASANTVILLE, NY 10570

GRIFFITHS ENGINEERING
13 South Washington Street, Suite 1
Binghamton, New York 13903
Telephone (607) 724-2400
Fax (607) 724-2456

Seal

Designed by: -
Drawn by: -
Ckd by: DG
Date: -
Rev.# -
Project No.: 2012-116
Plot Scale: AS NOTED

Drawing Name: PUMPING STATION No. 1 & 2 PLAN & SECTION

Project Location: OLD VESTAL ROAD TOWN OF VESTAL BROOME COUNTY, NY
Project Name: BJC/STP FLOOD WALL

Drawing Reference Number: S-PS-01
OF

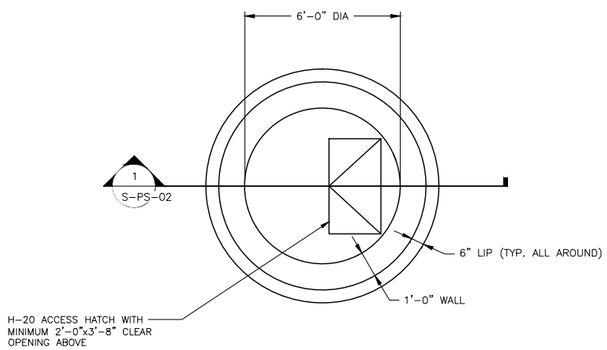

1 STORMWATER PUMP STATION 3 – PLAN
Scale: 3/8" = 1'-0"

0 2' 4'
SCALE: 3/8" = 1'-0"

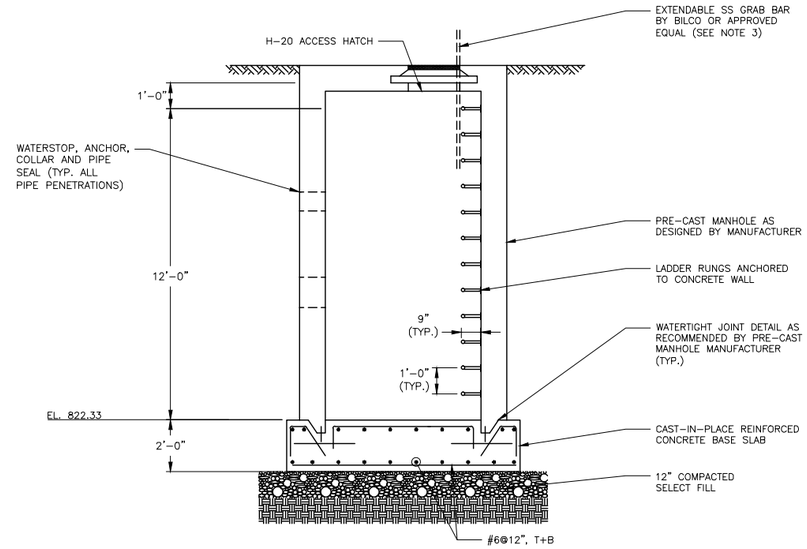

1 STORMWATER PUMP STATION 3 – SECTION
S-PS-02
Scale: 3/8" = 1'-0"

0 2' 4'
SCALE: 3/8" = 1'-0"

NOTES:

1. COORDINATE WITH M-DRAWINGS FOR ADDITIONAL PIPE PENETRATIONS NOT SHOWN.
2. FOR PUMP STATION LOCATION AND ORIENTATION, SEE SITE PLANS.
3. EXTENDABLE GRAB BAR SHALL BE STAINLESS STEEL, AND IT SHALL COMPLY WITH OSHA STANDARDS.

SAVIN ENGINEERS, P.C.
3 CAMPUS DRIVE
PLEASANTVILLE, NY 10570

GRIFFITHS ENGINEERING
15 South Washington Street, Suite 1
Binghamton, New York 13903
Telephone (607) 724-2400
Fax (607) 724-2456

Seal

Designed by:
Drawn by:
Chkd by: DG
Date:
Rev.#
Project No.: 2012-116
Plot Scale: AS NOTED

UNAUTHORIZED ALTERATION OF THIS DOCUMENT IS A VIOLATION OF THE NEW YORK STATE EDUCATION LAW, SECTION 7209, SUBDIVISION 2.

Drawing Name:
PUMPING STATION No. 3
PLAN & SECTION

Project Location:
OLD VESTAL ROAD
TOWN OF VESTAL
BROOME COUNTY, NY

Project Name:
BJCJSTP
FLOOD WALL

Drawing Reference Number:
S-PS-02
OF

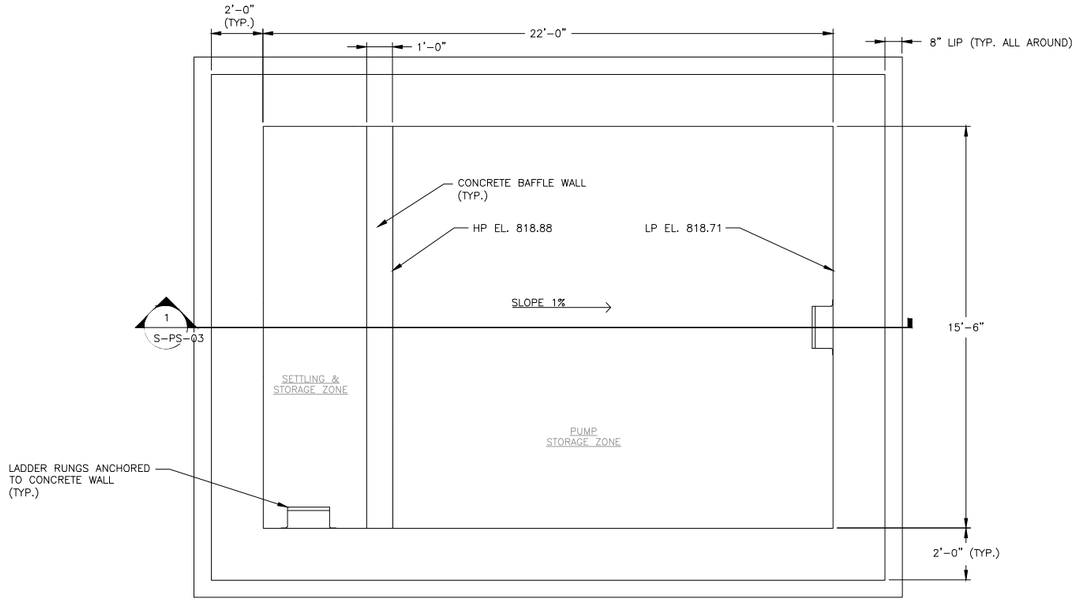

1 S-PS-03 STORMWATER PUMP STATION 4 – LOWER PLAN
Scale: 3/8" = 1'-0"

SCALE: 3/8" = 1'-0"

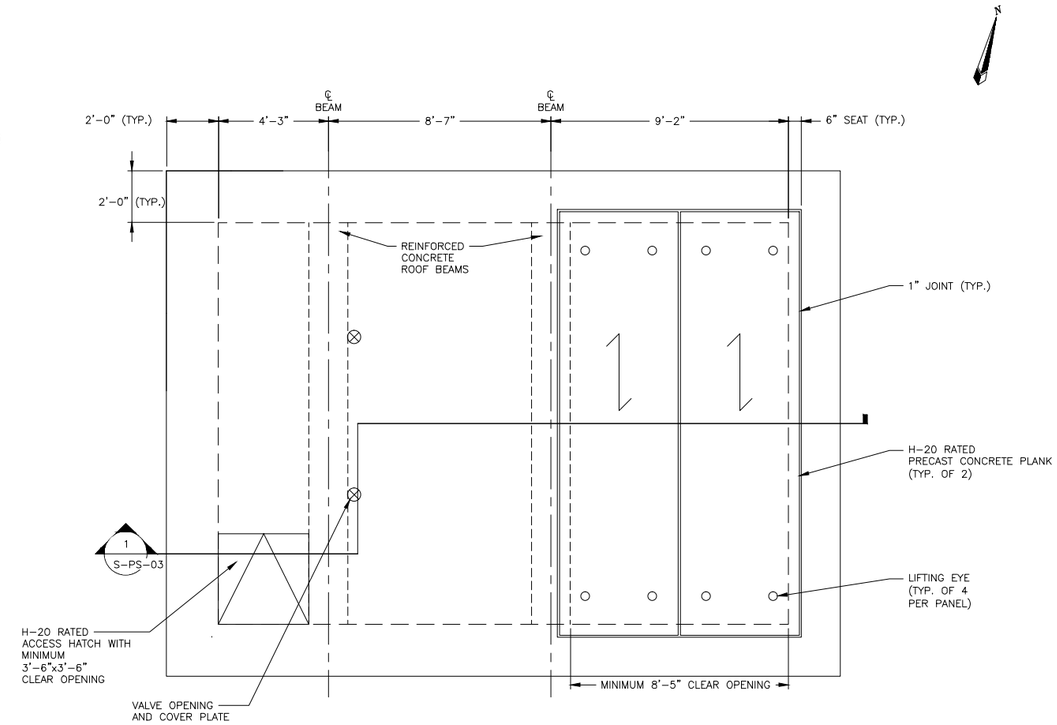

2 S-PS-03 STORMWATER PUMP STATION 4 – UPPER PLAN
Scale: 3/8" = 1'-0"

SCALE: 3/8" = 1'-0"

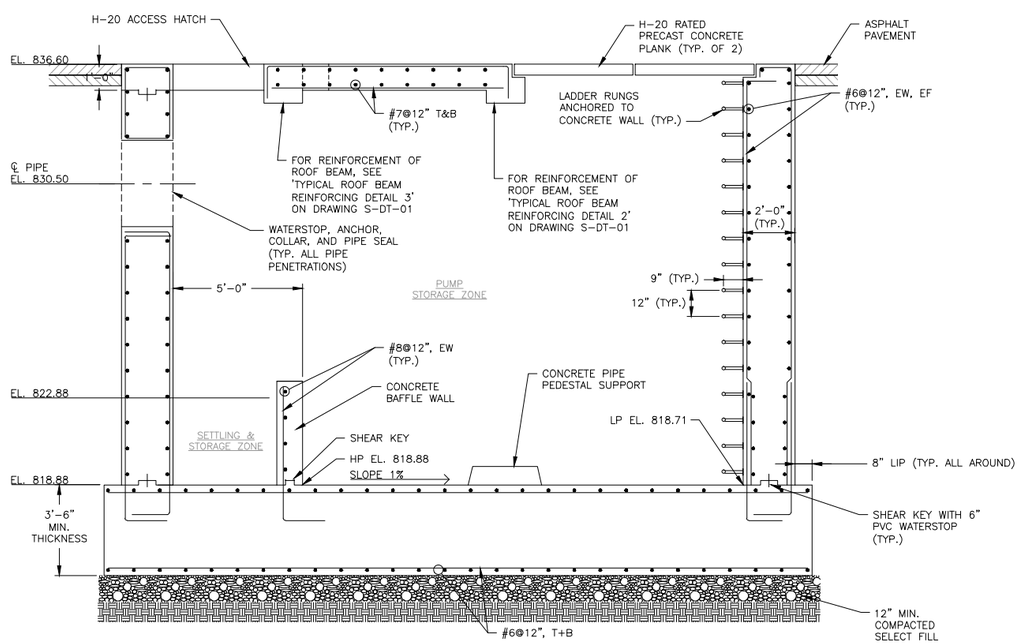

1 S-PS-03 STORMWATER PUMP STATION 4 – SECTION
Scale: 3/8" = 1'-0"

SCALE: 3/8" = 1'-0"

NOTES:

1. COORDINATE WITH M-DRAWINGS FOR ADDITIONAL PIPE PENETRATIONS NOT SHOWN.
2. FOR PUMP STATION LOCATION AND ORIENTATION, SEE SITE PLANS.
3. ⟵⟶ DENOTES PRECAST CONCRETE PLANK SPAN.

SAVIN ENGINEERS, P.C.
3 CAMPUS DRIVE
PLEASANTVILLE, NY 10570

GRIFFITHS ENGINEERING
15 South Washington Street, Suite 1
Binghamton, New York 13903
Telephone (607) 724-2400
Fax (607) 724-2466

Seal

Designed by: Date: Rev.#
Drawn by: Cad by: DG Project No.: 2012-116
Plot Scale: AS NOTED

UNAUTHORIZED ALTERATION OF THIS DRAWING IS A VIOLATION OF THE LAW. SECTION 7209, SUBDIVISION 2.

Drawing Name: PUMPING STATION No. 4

Project Location: OLD VESTAL ROAD TOWN OF VESTAL BROOME COUNTY, NY

Project Name: BJC/STP FLOOD WALL

Drawing Reference Number: S-PS-03

OF

BASIC DEVELOPMENT LENGTH AND SPLICE LENGTH

FOR BARS IN TENSION (UNCOATED REINFORCEMENT)

fy = 60,000 psi — fc = 4000 psi OR GREATER, NORMAL WEIGHT CONCRETE

BASIC DEVELOPMENT LENGTH ** l d				BAR SIZE	CLASS B SPLICE LENGTH ** 1.3 x l d			
CLEAR SPACING > 3"		CLEAR SPACING < 3"			CLEAR SPACING > 3"		CLEAR SPACING < 3"	
BASIC	TOP *	BASIC	TOP *		BASIC	TOP *	BASIC	TOP *
1'–0"	1'–4"	1'–9"	2'–2"	#3	1'–4"	1'–9"	2'–2"	2'–11"
1'–4"	1'–8"	2'–2"	2'–9"	#4	1'–8"	2'–2"	2'–9"	3'–7"
1'–8"	2'–2"	2'–10"	3'–7"	#5	2'–2"	2'–10"	3'–7"	4'–8"
2'–0"	2'–6"	3'–3"	4'–2"	#6	2'–6"	3'–3"	4'–2"	5'–5"
3'–6"	4'–7"	5'–11"	7'–7"	#7	4'–7"	5'–11"	7'–7"	9'–11"
4'–0"	5'–2"	6'–9"	8'–8"	#8	5'–2"	6'–9"	8'–8"	11'–4"
4'–6"	5'–10"	7'–7"	9'–10"	#9	5'–10"	7'–7"	9'–9"	12'–9"
5'–0"	6'–5"	8'–6"	11'–10"	#10	6'–5"	8'–6"	11'–0"	13'–7"
5'–7"	7'–4"	9'–5"	12'–6"	#11	7'–4"	9'–5"	12'–6"	14'–9"

NOTES:

* TOP REINFORCEMENT IS HORIZONTAL REINFORCEMENT SO PLACED THAT MORE THAN 12 INCHES OF FRESH CONCRETE IS CAST IN THE MEMBER BELOW THE REINFORCEMENT

** LENGTHS SHOWN IN CHART SHALL BE MODIFIED WHERE REQUIRED TO CONFORM TO THE PROVISIONS OF ACI 318, SECTION 12.2

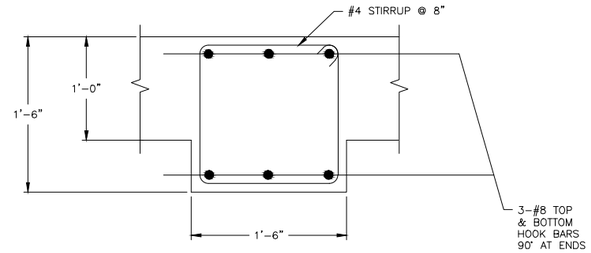

TYPICAL ROOF BEAM REINFORCING DETAIL 1

Scale: 1–1/2"=1'–0"

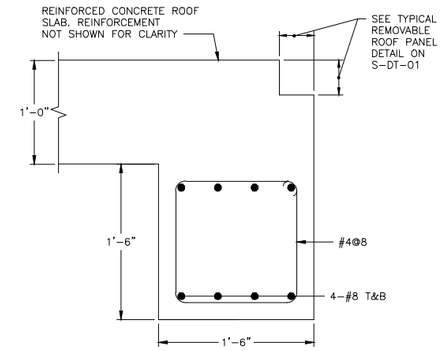

TYPICAL ROOF BEAM REINFORCING DETAIL 2

Scale: 1–1/2"=1'–0"

FLOOR BEAM SCHEDULE

MARK	DIMENSION		MAIN REINFORCING			STIRRUPS		REMARKS
	W (IN)	D (IN)	BOTTOM	MIDDLE	TOP	SIZE	SPACING	
FB–1	12	22	4 – #7	1 – #5 EF	3–#7	#4	@ 12"	
FB–2	18	30	4 – #8	2 – #6 EF	4–#8	#4	@ 12"	
FB–3	18	30	4 – #7	2 – #5 EF	4–#7	#4	@ 12"	

DEVELOPMENT LENGTH OF STANDARD HOOKS

FOR BARS IN TENSION (UNCOATED REINFORCEMENT)

fy = 60,000 psi — fc = 4000 psi OR GREATER, NORMAL WEIGHT CONCRETE

BAR SIZE	DEVELOPMENT LENGTH, l dh	
	BASIC	W/CONC. COVER *
#3	8"	6"
#4	10"	7"
#5	1'–0"	9"
#6	1'–3"	11"
#7	1'–5"	1'–0"
#8	1'–7"	1'–2"
#9	1'–10"	1'–4"
#10	2'–1"	1'–6"
#11	2'–3"	1'–7"

NOTES:

* SIDE COVER NORMAL TO PLANE OF HOOK AT LEAST 2½"; AND FOR 90° HOOK, END COVER BEYOND OUTSIDE END OF HOOK AT LEAST 2".

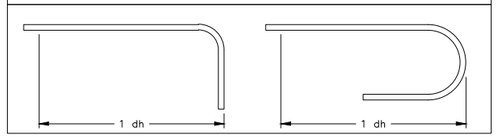

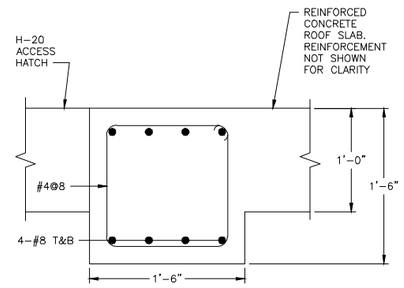

TYPICAL ROOF BEAM REINFORCING DETAIL 3

Scale: 1–1/2"=1'–0"

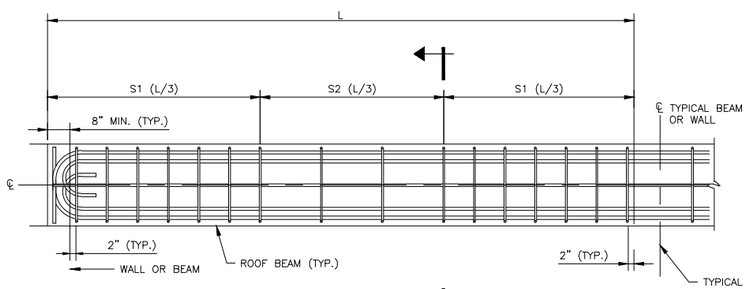

TYPICAL BEAM DETAIL

Scale: N.T.S

NOTES:

1. PROVIDE MINIMUM 8" DEEP BEAM POCKETS AT WALLS.

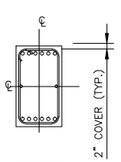

SECTION

Scale: N.T.S

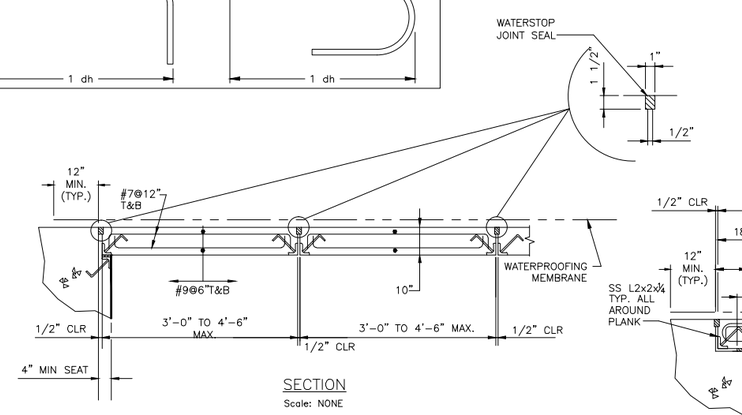

SECTION

Scale: NONE

NOTES:

1. 4 EYE HOOKS PER PANEL TO BE PROVIDED. EYE HOOK LOCATIONS TO BE DETERMINED BY FIELD ENGINEER.

TYPICAL REMOVABLE ROOF PANEL DETAIL

Scale: NONE

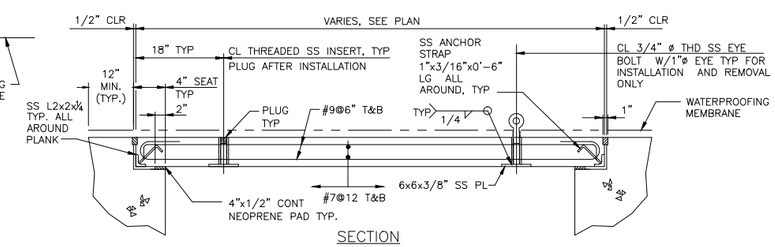

SECTION

Scale: NONE

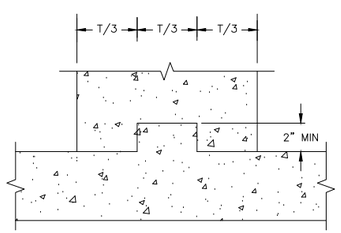

TYPICAL KEY DETAIL

Scale: N.T.S

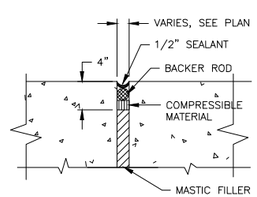

TYPICAL EXPANSION JOINT DETAIL

Scale: N.T.S

NOTES:

1. INSERT COMPRESSIBLE FILLER MATERIAL OF 1" DEPTH IN CONTACT WITH MASTIC FILLER.
2. INSERT BACKER ROD & SEALANT IN UPPER 2" SPACE AS SHOWN.
3. SEALANT AND NEW COMPRESSIBLE MATERIAL SHALL BE COMPATIBLE WITH EACH OTHER AND ANY MASTIC MATERIAL IN THE JOINT.

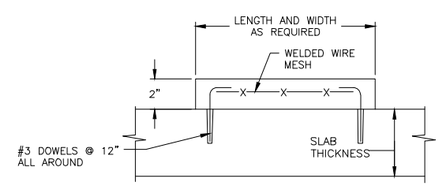

TYPICAL LOW PROFILE PAD DETAIL

Scale: N.T.S

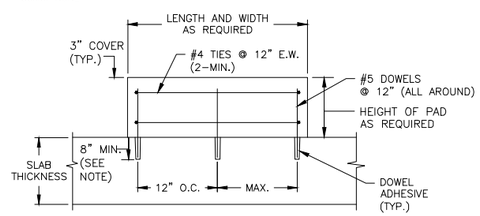

TYPICAL PAD DETAIL

Scale: N.T.S

NOTES:

1. ANCHOR BOLTS FOR EQUIPMENT SHALL BE INSTALLED PRIOR TO PLACEMENT OF CONCRETE. WHERE FLOOR IS 8" THICK OR LESS, USE #4 DOWELS EMBEDDED TO WITHIN 2" OF BOTTOM OF FLOOR SLAB.

SAVIN ENGINEERS, P.C.
3 CAMPUS DRIVE
PLEASANTVILLE, NY 10570

GRIFFITHS ENGINEERING
15 South Washington Street, Suite 1
Binghamton, New York 13903
Telephone (607) 724-2400
Fax (607) 724-2466

Seal

Designed by: | Date: | Rev.#

Drawn by: DG | Cad by: | Project No.: 2012–116 | Plot Scale: AS NOTED

UNAUTHORIZED ALTERATION OF THIS DRAWING IS A VIOLATION OF THE NEW YORK STATE EDUCATION LAW, SECTION 7209, SUBDIVISION 2.

Drawing Name: TYPICAL DETAILS I

Project Location: OLD VESTAL ROAD TOWN OF VESTAL BROOME COUNTY, NY

Project Name: BJC/STP FLOOD WALL

Drawing Reference Number: S–DT–01

OF

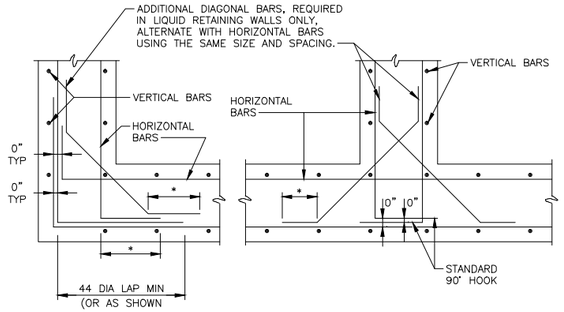

TYPICAL WALL REINFORCING DETAIL

Scale: N.T.S

NOTE:

* DENOTES STD 90° HOOK LENGTH.

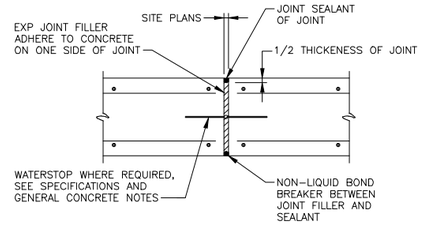

TYPICAL EXPANSION JOINT DETAIL

Scale: N.T.S

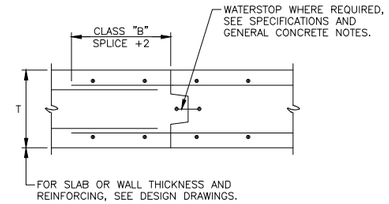

TYPICAL SLAB HORIZONTAL CONSTRUCTION JOINT DETAIL

Scale: N.T.S

NOTE:

USE FOR LIQUID RETAINING STRUCTURES.

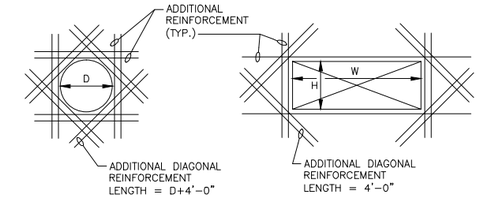

NOTES:

1. PROVIDE ADDITIONAL REINFORCEMENT WHEN OPENING SIZE (D, W, OR H) IS EQUAL TO OR GREATER THAN SPECIFIED BAR SPACING.
2. EXTEND REINFORCEMENT A MINIMUM OF 48 BAR DIAMETERS BEYOND THE FACE OF THE OPENING.
3. PROVIDE ONE HALF THE AREA OF CUT BARS, EACH SIDE, MINIMUM 2 #4 @ 6" EF.
4. PROVIDE ADDITIONAL DIAGONAL REINFORCEMENT AT ALL OPENINGS.
   A. OPENINGS (D, H, OR W) UP TO 1'-0": 2 #4 @ 6" EF
   B. OPENINGS (D, H, OR W) UP TO 2'-0": 2 #5 @ 6" EF
   C. OPENINGS (D, H, OR W) UP TO 4'-0": 2 #6 @ 6" EF
5. WHERE REINFORCING AROUND OPENINGS IS SHOWN ON OTHER DRAWINGS PROVIDE ADDITIONAL REINFORCING AS PER THIS DETAIL.

TYPICAL REINFORCEMENT AT OPENING > 12"ø

Scale: N.T.S

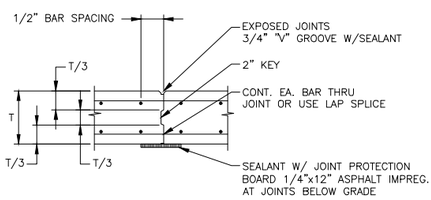

WALL CONSTRUCTION JOINT DETAIL AT NON-LIQUID RETAINING STRUCTURE

Scale: N.T.S

NOTES:

1. MAXIMUM SPACING BETWEEN JOINTS, 30 FEET O.C.
2. PROVIDE REBAR FABRICATOR WITH FINALIZED CONSTRUCTION JOINT LAYOUT BEFORE REBAR DETAILING BEGINS.

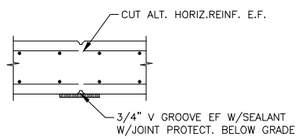

WALL CONTROL JOINT DETAIL AT NON-LIQUID RETAINING STRUCTURE

Scale: N.T.S

NOTES:

1. MAXIMUM SPACING BETWEEN JOINTS, 30 FEET O.C.

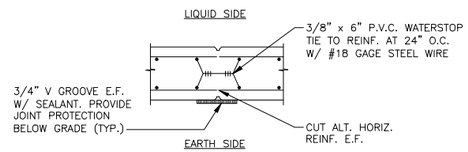

WALL CONTROL JOINT DETAIL AT LIQUID RETAINING STRUCTURE

Scale: N.T.S

NOTES:

1. MAXIMUM SPACING BETWEEN JOINTS, 30-0" UNLESS OTHERWISE NOTED ON THE PLANS.

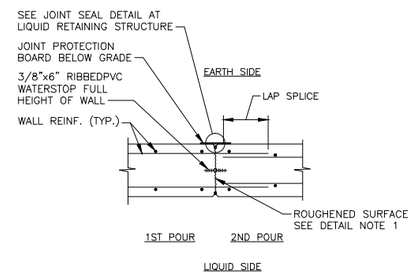

WALL CONSTRUCTION JOINT DETAIL AT LIQUID RETAINING STRUCTURE

Scale: N.T.S

NOTES:

1. ROUGHEN SURFACE BY USING EXPANDED METAL OR FINE MESH AT THE VERTICAL STOP.
2. MAXIMUM SPACING BETWEEN JOINTS 30'-0" UNLESS OTHERWISE NOTED ON THE PLANS.

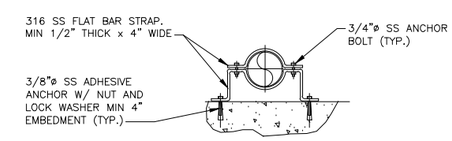

TYPICAL PIPE STRAP DETAIL

Scale: N.T.S

NOTES:

1. THIS PIPE SUPPORT PIPE STRAP DETAIL SHALL BE SPACED @ MAX 4-ft O.C.
2. PROVIDE 2" MIN. CLEARANCE FROM CONCRETE FACE.

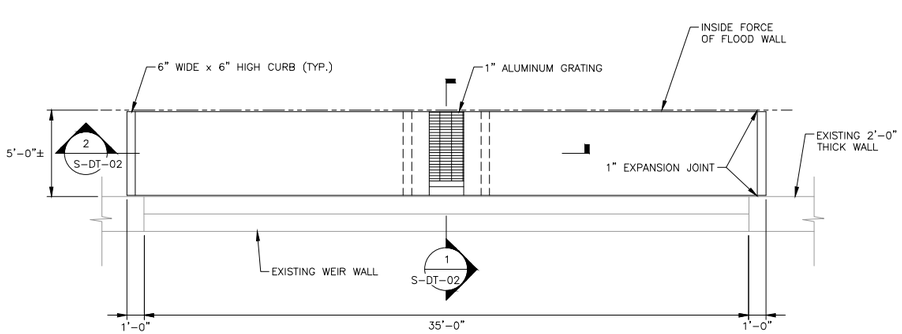

A SPILLWAY DETAIL

Scale: N.T.S

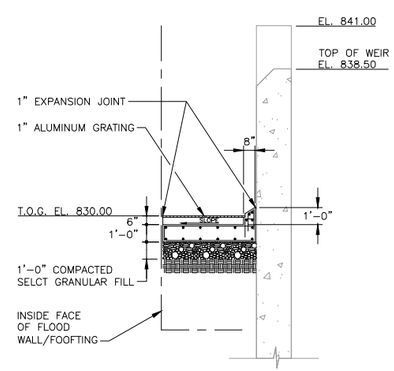

1 SECTION

Scale: N.T.S

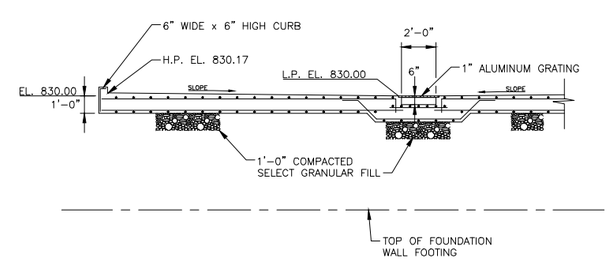

2 SECTION

Scale: N.T.S

SAVIN ENGINEERS, P.C.
3 CAMPUS DRIVE
PLEASANTVILLE, NY 10570

GRIFFITHS ENGINEERING
15 South Washington Street, Suite 1
Binghamton, New York 13903
Telephone (607) 724-2400
Fax (607) 724-2466

Seal

Date:	Rev.#
Project No.:	2012-116
Plot Scale:	AS NOTED
Designed by:	
Drawn by:	Chkd by: DG

UNAUTHORIZED ALTERATION OF THIS DRAWING IS A VIOLATION OF THE STATE EDUCATION LAW, SECTION 7209, SUBDIVISION 2.

Drawing Name: TYPICAL DETAILS II

Project Location: OLD VESTAL ROAD TOWN OF VESTAL BROOME COUNTY, NY

Project Name: BJC/STP FLOOD WALL

Drawing Reference Number: S-DT-02

OF

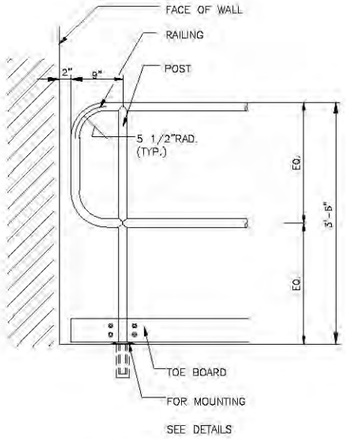

TYPICAL RAILING END
SCALE: 1/2" = 1'-0"

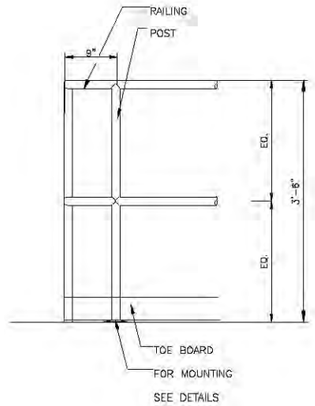

TYPICAL RAILING CORNER
SCALE: 1/2" = 1'-0"

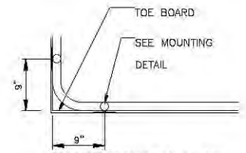

TYPICAL CORNER PLAN
SCALE: 1/2" = 1'-0"

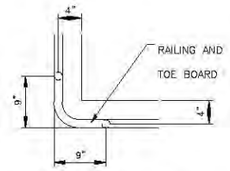

TYPICAL CORNER PLAN
SCALE: 1/2" = 1'-0"

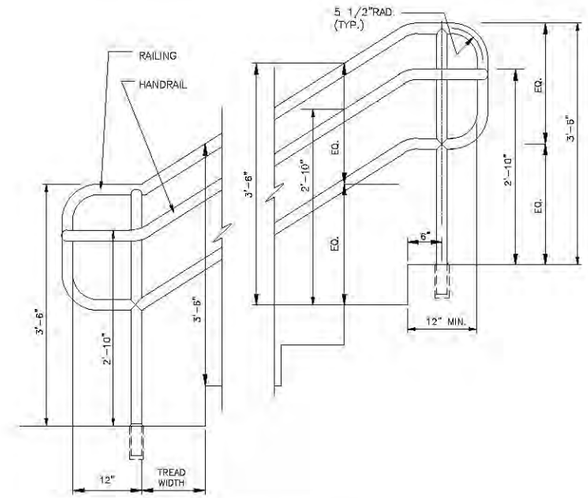

TYPICAL END DETAILS
SCALE: 1/2" = 1'-0"

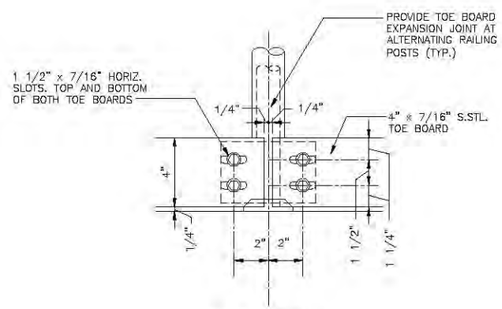

ELEVATION

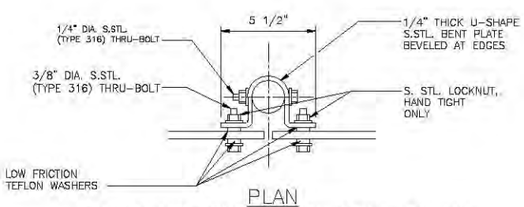

PLAN
TOE BOARD EXPANSION JOINT DETAIL
SCALE: 1 1/2" = 1'-0"

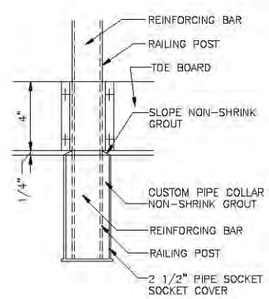

FIXED RAIL DETAIL
SCALE: 1 1/2" = 1'-0"

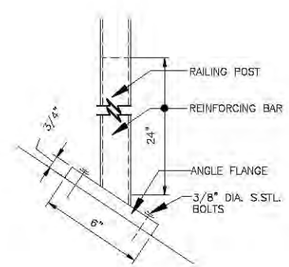

STRINGER MOUNT DETAIL
SCALE: 1 1/2" = 1'-0"

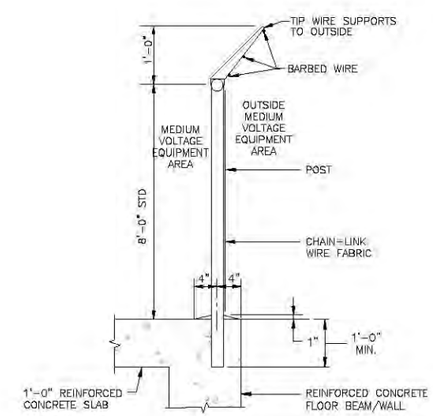

CHAIN LINK FENCE DETAIL
NOT TO SCALE

NOTES:
1. SEE THE SPECIFICATIONS FOR MORE INFORMATION.

SAVIN
SAVIN ENGINEERS, P.C.
3 CAMPUS DRIVE
PLEASANTVILLE, NY 10570

GRIFFITHS
GRIFFITHS ENGINEERING
13 South Washington Street, Suite 1
Binghamton, New York 13903
Telephone (607) 724-2400
Fax (607) 724-2456

Seal

Designed by: -
Date: -
Rev.#
Drawn by: -
Ckd by: DG
Project No.: 2012-116
Plot Scale: AS NOTED

UNAUTHORIZED ALTERATION OF THIS DRAWING IS A VIOLATION OF THE NEW YORK STATE EDUCATION LAW, SECTION 7209, SUBDIVISION 2.

Drawing Name:
TYPICAL DETAILS III

Project Location: OLD VESTAL ROAD TOWN OF VESTAL BROOME COUNTY, NY

Project Name: BJC/STP FLOOD WALL

Drawing Reference Number:
S-DT-03
OF

GENERAL MECHANICAL NOTES

1. THE LOCATION OF EXISTING PIPING AND EQUIPMENT WAS OBTAINED FROM THE CONTRACT DRAWINGS UNDER WHICH THEY WERE INSTALLED. PRIOR TO THE INSTALLATION OF ANY PIPING UNDER THIS CONTRACT, FIELD VERIFY THE LOCATION OF EXISTING PIPING, EQUIPMENT AND OTHER RELEVANT EXISTING CONDITIONS. NOTIFY THE ENGINEER OF ALL DISCREPANCIES BEFORE PROCEEDING WITH WORK.
2. THE DRAWINGS SHOW THE GENERAL LOCATION AND ARRANGEMENT OF THE EQUIPMENT, PIPING AND APPURTENANCES SPECIFIED. CONTRACTOR SHALL COORDINATE THE ACTUAL LOCATIONS OF EQUIPMENT, PIPING AND APPURTENANCES BASED ON THE ACTUAL DIMENSIONS OF THE ITEMS PROVIDED.
3. IN GENERAL, EQUIPMENT AND PIPING SHOWN WITH BOLD OR HEAVY LINES IS WORK TO BE PROVIDED UNDER THE MECHANICAL TRADES. EQUIPMENT AND PIPING SHOWN WITH THIN OR LIGHT LINES IS EXISTING OR IS WORK TO BE PROVIDED UNDER OTHER TRADES. DRAWINGS OF OTHER TRADES SHALL BE REVIEWED FOR SEQUENCING AND COORDINATION OF ADDITIONAL ITEMS INCLUDED IN THE WORK.
4. NO PIPING WORK INCLUDING DEMOLITION WILL BE ALLOWED UNTIL WORKING DRAWINGS AND COORDINATION DRAWINGS HAVE BEEN APPROVED BY THE ENGINEER.
5. CONNECTION OF PIPING INSTALLED UNDER THIS CONTRACT:
   a. IF THE PIPING UNDER THIS CONTRACT IS INSTALLED PRIOR TO WORK INCLUDED IN OTHER CONTRACTS, INSTALL A BLIND FLANGE, CAP OR PLUG THE PIPE AT THE LIMITS OF THE CONTRACT WORK.
   b. IF THE PIPING UNDER THIS CONTRACT IS TO BE CONNECTED TO PREVIOUSLY INSTALLED WORK, REMOVE ANY BLIND FLANGES, CAPS OR PLUGS AND MAKE THE NECESSARY CONNECTIONS.
6. BLIND FLANGE OR OTHERWISE PLUG EXISTING PIPING AND PIPING INSTALLED UNDER THIS CONTRACT AS REQUIRED TO MAINTAIN PLANT OPERATIONS AND CLOSE OFF PIPING CONNECTED TO OPERATING SYSTEMS.
7. PIPE SUPPORTS ARE NOT SHOWN FOR CLARITY. PROVIDE PIPE SUPPORTS IN ACCORDANCE WITH THE STANDARD DETAILS AND SPECIFICATIONS. PIPE SUPPORTS SHALL BE COORDINATED WITH PIPING, CONDUIT, DUCTWORK AND OTHER EQUIPMENT IN THE VICINITY OF THE PIPE BEING SUPPORTED.
8. EXPANSION JOINTS SHALL BE PLACED IN ALL PIPES CROSSING A STRUCTURAL EXPANSION JOINT, UNLESS NOTED OTHERWISE.
9. PIPE MATERIALS SHALL BE AS PER THE PIPING SCHEDULE IN SPECIFICATION SECTION 40 05 13 – COMMON WORK RESULTS FOR PIPING, UNLESS NOTED OTHERWISE.
10. VALVES SHALL BE AS PER THE VALVE SCHEDULE IN SPECIFICATION SECTION 40 05 23 – COMMON WORK RESULTS FOR VALVES, UNLESS NOTED OTHERWISE.
11. IDENTIFICATION TAGS AND SIGNS FOR EQUIPMENT, STRUCTURES AND VALVES SHALL COMPLY WITH THE REQUIREMENTS OF THE APPLICABLE SECTIONS OF THE SPECIFICATIONS.
12. EQUIPMENT, PIPING, SUPPORTS AND OTHER APPURTENANCES SHALL BE PAINTED IN ACCORDANCE WITH THE SPECIFICATIONS. EXISTING EQUIPMENT, PIPING, SUPPORTS AND OTHER APPURTENANCES TO REMAIN SHALL BE PAINTED IN ACCORDANCE WITH THE SPECIFICATIONS.
13. DRAINS AND FLUSHING CONNECTIONS SHALL BE A MINIMUM OF 1–1/2" DIAMETER, AND PIPED TO WITHIN 6 INCHES FROM FINISHED FLOOR. IF CONNECTION IS GREATER THAN 7 FEET FROM FLOOR, PROVIDE ISOLATION VALVES AT BOTH ENDS OF PIPING. DRAIN CONNECTIONS SHALL BE PROVIDED AT ALL LOW POINTS AND AS NOTED ON THE PLANS OR REQUIRED IN THE SPECIFICATIONS.
14. WHEREVER REQUIRED TO MAINTAIN PROPER ALIGNMENT ON FLANGED PIPE LINES, INSTALL BEVELED FLANGE FILLERS OR COUPLINGS. THESE BEVELED FLANGE FILLERS AND PIPE COUPLINGS ARE NOT NECESSARILY INDICATED ON THE DRAWINGS.
15. THE ELECTRICAL HAZARD CLASSIFICATIONS IN ACCORDANCE WITH NFPA 820 ARE SHOWN ON THE MECHANICAL DRAWINGS FOR COORDINATION PURPOSES. THE CLASSIFICATION OF EACH ROOM OR SPACE, WHERE RATED, IS GENERALLY SHOWN ON THE PLAN DRAWING FOR THE LOWEST APPLICABLE ELEVATION OF A PARTICULAR AREA. THE CLASSIFICATION APPLIES TO THE ENTIRE ROOM OR SPACE OF WHICH THE AREA REFERENCED IS A PART UNLESS PHYSICALLY SEPARATED FROM THE ADJACENT SPACES BY WALL, SLAB OR OTHER COMPLETE PHYSICAL BARRIER. EQUIPMENT AND DEVICES PROVIDED WITHIN THE CLASSIFIED SPACES SHALL BE RATED FOR USE IN SUCH AREAS. REFER TO THE ELECTRICAL DRAWINGS FOR ADDITIONAL REQUIREMENTS.
16. MATERIALS AND EQUIPMENT LOCATED WITHIN ENCLOSED SPACES SUCH AS WET WELLS OR COVERED TANKS SHALL BE FABRICATED OF NON–CORROSIVE MATERIALS. ALL METAL ITEMS SHALL BE STAINLESS STEEL UNLESS SPECIFIED OTHERWISE.
17. ALL ANCHOR BOLTS AND RELATED HARDWARE SHALL BE TYPE 316 STAINLESS STEEL.

MECHANICAL ABBREVIATIONS

BWW	BACKWASH WASTE
DI	DUCTILE IRON
DR	DRAIN
HB	HOSE BIB
PE	PLANT EFFLUENT
SEW	SEWAGE
SFM	SEWAGE FORCE MAIN
SS	STAINLESS STEEL PIPE
STL	STEEL PIPE
VT	VENT

MECHANICAL LEGEND

VALVES

SYMBOL	DESCRIPTION
	BUTTERFLY VALVE
	SWING CHECK VALVE
	GATE VALVE
K	KNIFE GATE VALVE
DB	DUCKBILL CHECK VALVE
	PLUG VALVE
	AIR RELEASE VALVE

FITTINGS

SYMBOL	DESCRIPTION
	CONCENTRIC REDUCER
	ECCENTRIC REDUCER
	FLEXIBLE CONNECTION
	QUICK CONNECTION
	PIPE UNION
	SPLIT COUPLING
	SLEEVE COUPLING
	STRAINER
	EXPANSION JOINT
	1 1/2" HOSE BIB
	3/4" HOSE BIB
	EXPANSION JOINT

PUMPS

SYMBOL	DESCRIPTION
	CENTRIFUGAL PUMP

GATES & WEIRS

SYMBOL	DESCRIPTION
M	MOTORIZED SLIDE GATE
	SLIDE GATE
M	MOTORIZED SLUICE GATE
	SLUICE GATE
	WEIR
	BAR RACK

METERS & INDICATORS

SYMBOL	DESCRIPTION
PI	PRESSURE GAUGE
	MAGNETIC FLOW METER

FLOW CONTROL

SYMBOL	DESCRIPTION
PS	PRESSURE SWITCH
FS	FLOAT SWITCH

MISCELLANEOUS

SYMBOL	DESCRIPTION
	AIR VENT
	CORPORATION STOP
	PIPE CROSSING
	POINT OF CONNECTION
	DIRECTION OF FLOW
	EQUIPMENT TO BE REMOVED
	EQUIPMENT TO REMAIN
	EQUIPMENT TO BE INSTALLED
	STRUCTURAL AND ARCHITECTURAL FEATURES
	DRAIN
LE – 0170 – 1A	INSTRUMENTATION TAG
HW– PMP – 1	EQUIPMENT TAG

SAVIN ENGINEERS, P.C.
3 CAMPUS DRIVE
PLEASANTVILLE, NY 10570

GRIFFITHS ENGINEERING
15 South Washington Street, Suite 1
Binghamton, New York 13903
Telephone (607) 724-2400
Fax (607) 724-2466

Seal

Designed by:
Date: -
Rev.# -
Drawn by: -
Cad by: DG
Project No.: 2012–116
Plot Scale: AS NOTED

UNAUTHORIZED ALTERATION OF THIS DRAWING IS A VIOLATION OF THE STATE EDUCATION LAW, SECTION 7209, SUBDIVISION 2.

Drawing Name:
SYMBOL AND ABBREVIATIONS

Project Location:
OLD VESTAL ROAD
TOWN OF VESTAL
BROOME COUNTY, NY

Project Name:
BJC/STP
FLOOD WALL

Drawing Reference Number:
M–G–01
OF