FEDERAL EMERGENCY MANAGEMENT AGENCY

FEMA-172 / June 1992

NEHRP Handbook of Techniques for the Seismic Rehabilitation of Existing Buildings

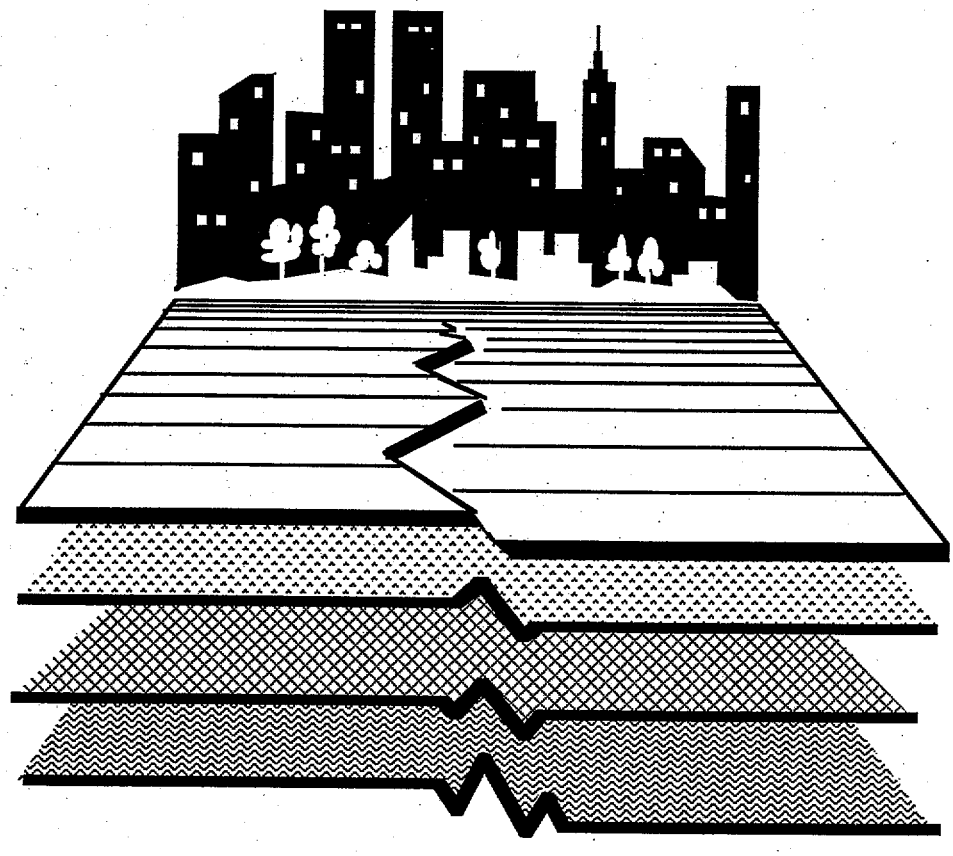

Issued by FEMA in furtherance of the Decade for Natural Disaster Reduction.

NEHRP Handbook of Techniques for the Seismic Rehabilitation of Existing Buildings

BUILDING SEISMIC SAFETY COUNCIL

A Council of the National Institute of Building Sciences

Program on Improved Seismic Safety Provisions

NEHRP HANDBOOK OF TECHNIQUES FOR THE SEISMIC REHABILITATION OF EXISTING BUILDINGS

THE BUILDING SEISMIC SAFETY COUNCIL AND ITS PURPOSE

The Building Seismic Safety Council (BSSC) was established in 1979 under the auspices of the National Institute of Building Sciences (NIBS) as an entirely new type of instrument for dealing with the complex regulatory, technical, social, and economic issues involved in developing and promulgating building earthquake hazard mitigation regulatory provisions that are national in scope. By bringing together in the BSSC all of the needed expertise and all relevant public and private interests, it was believed that issues related to the seismic safety of the built environment could be resolved and jurisdictional problems overcome through authoritative guidance and assistance backed by a broad consensus.

The BSSC is an independent, voluntary membership body representing a wide variety of building community interests. Its fundamental purpose is to enhance public safety by providing a national forum that fosters improved seismic safety provisions for use by the building community in the planning, design, construction, regulation, and utilization of buildings. To fulfill its purpose, the BSSC:

- Promotes the development of seismic safety provisions suitable for use throughout the United States;
- Recommends, encourages, and promotes the adoption of appropriate seismic safety provisions in voluntary standards and model codes;
- Assesses progress in the implementation of such provisions by federal, state, and local regulatory and construction agencies;
- Identifies opportunities for improving seismic safety regulations and practices and encourages public and private organizations to effect such improvements;
- Promotes the development of training and educational courses and materials for use by design professionals, builders, building regulatory officials, elected officials, industry representatives, other members of the building community, and the public;
- Advises government bodies on their programs of research, development, and implementation; and
- Periodically reviews and evaluates research findings, practices, and experience and makes recommendations for incorporation into seismic design practices.

The BSSC's area of interest encompasses all building types, structures, and related facilities and includes explicit consideration and assessment of the social, technical, administrative, political, legal, and economic implications of its deliberations and recommendations. The BSSC believes that the achievement of its purpose is a concern shared by all in the public and private sectors; therefore, its activities are structured to provide all interested entities (i.e., government bodies at all levels, voluntary organizations, business, industry, the design profession, the construction industry, the research community, and the general public) with the opportunity to participate. The BSSC also believes that the regional and local differences in the nature and magnitude of potentially hazardous earthquake events require a flexible approach to seismic safety that allows for consideration of the relative risk, resources, and capabilities of each community.

The BSSC is committed to continued technical improvement of seismic design provisions, assessment of advances in engineering knowledge and design experience, and evaluation of earthquake impacts. It recognizes that appropriate earthquake hazard reduction measures and initiatives should be adopted by existing organizations and institutions and incorporated, whenever possible, into their legislation, regulations, practices, rules, codes, relief procedures, and loan requirements so that these measures and initiatives become an integral part of established activities, not additional burdens. The BSSC itself assumes no standards-making and -promulgating role; rather, it advocates that code- and standards-formulation organizations consider BSSC recommendations for inclusion into their documents and standards.

BSSC Program on Improved Seismic Safety Provisions

NEHRP HANDBOOK OF TECHNIQUES FOR THE SEISMIC REHABILITATION OF EXISTING BUILDINGS

Developed by the
Building Seismic Safety Council
for the
Federal Emergency Management Agency
Based on a Preliminary Version Prepared for FEMA by
the URS/John A. Blume and Associates, Engineers

BUILDING SEISMIC SAFETY COUNCIL
Washington, D.C.
1992

NOTICE: Any opinions, findings, conclusions, or recommendations expressed in this publication do not necessarily reflect the views of the Federal Emergency Management Agency. Additionally, neither FEMA nor any of its employees make any warranty, expressed or implied, nor assume any legal liability or responsibility for the accuracy, completeness, or usefulness of any information, product, or process included in this publication.

This report was prepared under Contract EMW-88-C-2924 between the Federal Emergency Management Agency and the National Institute of Building Sciences.

Building Seismic Safety Council reports include the documents listed below; unless otherwise noted, single copies are available at no charge from the Council:

Abatement of Seismic Hazards to Lifelines: Proceedings of the Building Seismic Safety Council Workshop on Development of an Action Plan, 6 volumes, 1987

Action Plan for the Abatement of Seismic Hazards to New and Existing Lifelines, 1987

Guide to Use of the NEHRP Recommended Provisions in Earthquake-Resistant Design of Buildings, 1990

NEHRP (National Earthquake Hazards Reduction Program) Recommended Provisions for the Development of Seismic Regulations for New Buildings, 1988 and 1991 Editions, 2 volumes and maps, 1988 and 1991

NEHRP Handbook for the Seismic Evaluation of Existing Buildings, 1992

NEHRP Handbook of Techniques for the Seismic Rehabilitation of Existing Buildings, 1992

Non-Technical Explanation of the NEHRP Recommended Provisions, Revised Edition, 1990

Seismic Considerations for Communities at Risk, 1990*

Seismic Considerations: Elementary and Secondary Schools, Revised Edition, 1990

Seismic Considerations: Health Care Facilities, Revised Edition, 1990

Seismic Considerations: Hotels and Motels, Revised Edition, 1990

Seismic Considerations: Apartment Buildings, 1988

Seismic Considerations: Office Buildings, 1988

Societal Implications: Selected Readings, 1986.

Strategies and Approaches for Implementing a Comprehensive Program to Mitigate the Risk to Lifelines from Earthquakes and Other Natural Hazards, 1989 (available from the National Institute of Building Sciences for $11)

For further information concerning any of these documents or the activities of the BSSC, contact the Executive Director, Building Seismic Safety Council, 1201 L St., N.W., Suite 400, Washington, D.C. 20005.

*An earlier version of this publication was entitled *Societal Implications: A Community Handbook.*

FOREWORD

The Federal Emergency Management Agency (FEMA) is pleased to have sponsored the preparation of this publication on seismic strengthening of existing buildings. The publication is one of a series that FEMA is sponsoring to encourage local decision makers, design professionals, and other interested groups to undertake a program of mitigating the risks posed by existing hazardous buildings in the event of an earthquake. Publications in this series are being prepared under the National Earthquake Hazards Reduction Program (NEHRP) and examine both the engineering/architectural aspects and societal impacts of seismic rehabilitation.

FEMA's existing buildings activities are structured to result in a coherent, cohesive, carefully selected and planned reinforcing set of documents designed for national applicability. The resulting publications (descriptive reports, handbooks, and supporting documentation) provide guidance primarily to local elected and appointed officials and design professionals on how to deal not only with earthquake engineering problems but also with the public policy issues and societal dislocations associated with major seismic events. It is a truly interdisciplinary set of documents that includes this handbook of techniques as well as a companion volume presenting a methodology for conducting an evaluation of the seismic safety of existing buildings.

With respect to this handbook, FEMA gratefully acknowledges the expertise and efforts of the Building Seismic Safety Council's Retrofit of Existing Buildings Committee, Board of Direction, member organizations, and staff and of the members of the Technical Advisory Panel and URS/John A. Blume and Associates management and staff.

Federal Emergency Management Agency

PREFACE

This handbook of techniques for solving a variety of seismic rehabilitation problems and its companion publication on the seismic evaluation of existing buildings reflect basic input provided by two organizations recognized for their retrofit evaluation and design experience as well as the results of a consensus development activity carried out by the Building Seismic Safety Council (BSSC). The preliminary version of this document, the *NEHRP Handbook of Techniques for the Seismic Rehabilitation of Existing Buildings*, was developed for FEMA by URS/John A. Blume and Associates, Engineers (URS/Blume). A companion volume, the *NEHRP Handbook for the Seismic Evaluation of Existing Buildings*, for which a preliminary version was developed for FEMA by the Applied Technology Council (ATC), provides a method for evaluating existing buildings to identify those that are likely to be seismically hazardous. The BSSC project, initiated at the request of FEMA in October 1988, has focused on identification and resolution of technical issues in and appropriate revision of the two handbooks by a 22-member Retrofit of Existing Buildings (REB) Committee composed of individuals possessing expertise in the various subjects needed to address seismic rehabilitation.

The balloting of the two handbooks was conducted on a chapter-by-chapter basis in September and October 1991. Although all parts of both handbooks passed the ballot by the required two-thirds majority, the Board, after reviewing the ballot results in November 1991, concluded that many of the comments were sufficiently serious to warrant further consideration and that the REB Committee should have the opportunity to review the ballot comments and propose changes for reballoting in response to those considered persuasive. The REB Committee members then were asked to review the ballot comments and forward the results of their review to a member of the REB Executive Committee. In turn, the Executive Committee met in early January 1992 to consider committee member suggestions and prepare responses to the ballot comments and proposals for revision of the handbooks. The Executive Committee recommendations for reballoting were presented to and accepted by the BSSC Board. The reballot proposals were developed and submitted to the BSSC member organizations for balloting in late January 1992. All the reballot proposals passed but several issues raised in comments were considered and resolved at a special meeting of the Council in February 1992.

The BSSC REB Committee and Board of Direction believe that these two handbooks will prove to be beneficial to those who are involved in or who need to begin exploring the seismic evaluation and rehabilitation of existing buildings, a topic of growing importance especially in the eastern and midwestern parts of the nation where little such work has been done. It is hoped that experience with the application of these handbooks will generate feedback that can serve as the foundation for the enhancement of future documents dealing with the seismic rehabilitation of existing buildings. To this end, a User Comment Form is included in the handbooks to stimulate those who work with the handbooks to report their experiences. In addition, since some of the issues raised by BSSC member organizations during the balloting of the handbooks bear on the need for future enhancement of the information presented, a summary of the results of the BSSC balloting including all comments received and committee decisions/responses to those comments is available to interested readers upon request to the BSSC.

The Board wishes to emphasize that these documents are intended to serve as informational "points of departure" for the professional involved in seismic evaluation and rehabilitation. They cannot yet be considered all inclusive nor are they intended to serve as the basis for regulation. Rather, it is hoped that both will prove to be of sufficient value to warrant expansion and refinement.

Considerable effort has gone into the development of this handbook. On behalf of the BSSC Board, I wish to acknowledge the organizations and individuals who have participated. The Board is particularly grateful for the extensive contribution of time and expertise from those serving on its Retrofit of Existing Buildings Committee of volunteer experts:

Daniel Shapiro, SOH and Associates, San Francisco, California (Committee Chairman)
M. Agbabian, University of Southern California, Los Angeles, California
Christopher Arnold, Building Systems Development, San Mateo, California
Mohammad Ayub, U.S. Department of Labor, Washington, D.C.
John R. Battles, Southern Building Code Congress, International, Birmingham, Alabama

Pamalee Brady, U.S. Army Construction Engineering, Champaign, Illinois
Vincent R. Bush, Consulting Structural Engineer, Walnut, California
John Canestro, City of Orinda, Pleasanton, California
Arnaldo T. Derecho, Wiss, Janney, Elstner Associates, Incorporated, Northbrook, Illinois
Edward Diekmann, GFDS Structural Engineers, San Francisco, California
Ronald P. Gallagher, R. P. Gallagher Associates, Incorporated, San Francisco, California
James R. Harris, J. R. Harris and Company, Denver, Colorado
John Kariotis, Kariotis and Associates, South Pasadena, California
Franklin Lew, Contra Costa County, Martinez, California
Frank E. McClure, Consulting Structural Engineer, Orinda, California
Allan R. Porush, Dames and Moore, Los Angeles, California
Norton S. Remmer, Consulting Engineer, Worcester, Massachusetts
Ralph Rowland,* Architectural Research, Cheshire, Connecticut
Earl Schwartz, Los Angeles City Department of Building and Safety, Los Angeles, California
William W. Stewart, William Stewart and Associates, Clayton, Missouri
Robert Voelz, Bentley Engineering Company, San Francisco, California
Loring A. Wyllie, H. J. Degenkolb Associates, San Francisco, California

Needless to say, the Council's project would not have been successful without the developmental work and cooperation of the URS/Blume project staff: R. Martin Czarnecki, Principal-in-Charge; John F. Silva, Project Manager; David M. Bergman, Project Engineer; Joseph P. Nicoletti, Consultant; Walter N. Mestrovich; and Kit Wong.

Further, the BSSC Board wishes to acknowledge the contribution of URS/Blume's Technical Advisory Panel: Vitelmo V. Bertero, Robert D. Hanson, James O Jirsa, James M. Kelley, Stephen A. Mahin, Roger E. Scholl, and James K. Wight.

Finally, I would be remiss if I did not acknowledge the effort of the BSSC staff: James R. Smith, Executive Director; O. Allen Israelsen, Professional Engineer and Project Manager; Claret M. Heider, Technical Writer-Editor; and Karen E. Smith, Administrative Assistant.

Gerald Jones
Chairman, BSSC Board of Direction

*Corresponding member.

USER COMMENT FORM

Please fill out and return this form to the BSSC at 1201 L Street, N.W., 4th Floor, Washington, D.C. 20005. Your cooperation is greatly appreciated.

1. Describe your experience in using this handbook.

   What type of building was evaluated and proposed for rehabilitation?

   How was the evaluation performed? Was the *NEHRP Handbook for the Seismic Evaluation of Existing Buildings* used?

   Which techniques in this handbook were considered? What technique was selected? Was the rehabilitation completed?

   Were problems encountered in using this handbook? If so, describe the problems and how they were solved.

2. Prior to your use of this handbook, were you familiar with the *NEHRP Recommended Provisions for the Development of Seismic Regulations for New Buildings*.

3. Do you have recommendations for improving this handbook.

Name _____ Title _____

Organization _____

Address _____

Telephone and FAX Numbers _____

CONTENTS

FOREWORD iii

PREFACE v

USER COMMENT FORM vii

GLOSSARY xv

1. INTRODUCTION 1

1.1 Background 1
1.2 Development of This Handbook 2
1.3 Purpose of This Handbook 2
1.4 Scope and Limitations 3
1.5 Organization of This Handbook 3

2. SEISMIC VULNERABILITY OF BUILDINGS 5

2.0 Introduction 5
2.1 General Attributes of Structures 5
2.1.1 Strength 5
2.1.2 Stiffness 5
2.1.3 Ductility 6
2.1.4 Damping 6
2.2 Adverse Design and Construction Features 6
2.2.1 Lack of Direct Load Path 6
2.2.2 Irregularities 7
2.2.3 Lack of Redundancy 13
2.2.4 Lack of Toughness 13
2.2.5 Adjacent Buildings 14
2.3 Deteriorated Condition of Structural Materials 14

3. SEISMIC STRENGTHENING OF EXISTING BUILDINGS 17

3.0 Introduction 17
3.0.1 Cost Considerations 17
3.0.2 Functional Considerations 17
3.0.3 Aesthetic Considerations 18
3.0.4 Seismic Zonation 18
3.1 Vertical-resisting Elements--Moment Resisting Systems 18
3.1.1 Steel Moment Frames 18
3.1.2 Concrete Moment Frames 22
3.1.3 Moment Frames with Infills 26
3.1.4 Precast Concrete Moment Frames 28
3.2 Vertical-resisting Elements--Shear Walls 28
3.2.1 Reinforced Concrete or Reinforced Masonry Shear Walls 28
3.2.2 Precast Concrete Shear Walls 34
3.2.3 Unreinforced Masonry Shear Walls 34
3.2.4 Shear Walls in Wood Frame Buildings 37

3.3 Vertical-resisting Elements--Braced Frames 38
3.3.1 Steel Concentric Braced Frames 38
3.3.2 Rod or Other Tension Bracing 41
3.3.3 Eccentric Bracing 42
3.4 Vertical-resisting Elements--Adding Supplemental Members 43
3.4.1 Relative Compatibility 44
3.4.2 Exterior Supplemental Elements 45
3.4.3 Interior Supplemental Elements 45
3.5 Diaphragms 46
3.5.1 Timber Diaphragms 47
3.5.2 Concrete Diaphragms 51
3.5.3 Poured Gypsum Diaphragms 56
3.5.4 Precast Concrete Diaphragms 56
3.5.5 Steel Deck Diaphragms 59
3.5.6 Horizontal Steel Bracing 64
3.6 Foundations 65
3.6.1 Continuous or Strip Wall Footings 66
3.6.2 Individual Pier or Column Footings 68
3.6.3 Piles or Drilled Piers 70
3.6.4 Mat Foundations 72
3.7 Diaphragm to Vertical Element Connections 72
3.7.1 Connections of Timber Diaphragms 72
3.7.2 Connections of Concrete Diaphragms 84
3.7.3 Connections of Poured Gypsum Diaphragms 86
3.7.4 Connections of Precast Concrete Diaphragms 86
3.7.5 Connections of Steel Deck Diaphragms Without Concrete Fill 87
3.7.6 Connections of Steel Deck Diaphragms with Concrete Fill 89
3.7.7 Connections of Horizontal Steel Bracing 90
3.8 Vertical Element to Foundation Connections 91
3.8.1 Connections of Wood Stud Shear Walls 91
3.8.2 Connections of Metal Stud Shear Walls 95
3.8.3 Connections of Precast Concrete Shear Walls 95
3.8.4 Connections of Braced Frames 97
3.8.5 Connections of Steel Moment Frames 98
3.9 Adding a New Supplemental System 98
3.9.1 Supplemental Braced Frame System 99
3.9.2 New Shear Wall System 99
3.9.3 Structural Additions 101

4. DECREASING DEMAND ON EXISTING SYSTEMS 103

4.0 Introduction 103
4.1 Reducing the Weight of the Building 103
4.2 Increasing the Fundamental Period and the Energy Dissipating Capacity of the Structural System 104
4.3 Alternate Procedures 105
4.3.1 Seismic Isolation 105
4.3.2 Supplemental Damping 105

5. REHABILITATION OF NONSTRUCTURAL ARCHITECTURAL COMPONENTS 107

5.0 Introduction 107
5.1 Exterior Curtain Walls 107
5.2 Appendages 108
5.3 Veneers 109

5.4 Partitions 109
5.5 Ceilings 113
5.6 Lighting Fixtures 113
5.7 Glass Doors and Windows 114
5.8 Raised Computer Access Floors 115

6. REHABILITATION OF NONSTRUCTURAL MECHANICAL AND ELECTRICAL COMPONENTS 117

6.0 Introduction 117
6.1 Mechanical and Electrical Equipment 117
6.2 Ductwork and Piping 126
6.3 Elevators 133
6.4 Emergency Power Systems 133
6.5 Hazardous Material Storage Systems 135
6.6 Communication Systems 137
6.7 Computer Equipment 137

BIBLIOGRAPHY 143

APPENDICES

A Seismic-Force-Resisting Elements in Buildings 149
B Summary of Strengthening Techniques 165
C Rehabilitation Examples 185

MINORITY OPINION 193

BSSC BOARD OF DIRECTION AND MEMBER ORGANIZATIONS 195

FIGURES

LEGEND FOR FIGURES: (E) = Existing, (L) = Left, (N) = New, (R) = Right

2.2.2.1 Vertical irregularities--examples of in-plane and out-of-plane discontinuities 8
2.2.2.4a Horizontal and plan irregularities--rehabilitating a structure to reduce torsional loads 10
2.2.2.4b Horizontal and plan irregularities--examples of rehabilitating buildings with re-entrant corners 11
2.2.2.4c Horizontal and plan irregularities--example of strengthening a split level diaphragm 12
2.2.2.4d Horizontal and plan irregularities--example of rehabilitating building with nonparallel systems 12

3.1.1.2a Modification of an existing simple beam to a moment connection 19
3.1.1.2b Strengthening an existing column 20
3.1.1.2c Strengthening an existing beam 21
3.1.2.2a Encasing an existing beam in concrete 23
3.1.2.2b Strengthening an existing concrete column 24-25
3.1.2.2c Strengthening an existing concrete frame building with a reinforced concrete shear wall 26
3.2.1.2a Strengthening an existing shear wall by filling in existing openings 29
3.2.1.2b Example of details for enclosing an existing opening in a reinforced concrete or masonry wall 30
3.2.1.2c Strengthening an existing reinforced concrete or masonry wall 31
3.2.1.4 Example of strengthening an existing coupling beam at an exterior wall 32
3.2.3.2 Example of center coring technique 35
3.3 Bracing types 38
3.3.1.2 Addition to or replacement of an existing X-brace 39
3.4 Examples of supplementary strengthening 44
3.4.2 Example of supplemental in-plane strengthening by the addition of an external buttress 45
3.4.3 Connection of a supplemental interior shear wall 46

3.5.1.3	Exterior sheathing and top plate chord in a wood frame building	49
3.5.1.4a	Reinforcement of an opening in an existing timber diaphragm	50
3.5.1.4b	New drag strut in an existing wood diaphragm	51
3.5.2.2	Strengthening an existing concrete diaphragm with a new topping slab and chord	52
3.5.2.3	Adding a new chord member to an existing concrete diaphragm (not recommended for precast elements)	53
3.5.2.4a	Reinforcement of an opening in an existing concrete diaphragm	54
3.5.2.4b	Strengthening openings in overlaid diaphragms	55
3.5.4.2	Strengthening an existing precast concrete diaphragm with a concrete overlay	57
3.5.4.3	Adding a new steel member to an existing precast concrete diaphragm	58
3.5.5.2a	Strengthening an existing steel deck diaphragm	60
3.5.5.2b	Strengthening an existing steel deck diaphragm	61
3.5.5.2c	Strengthening an existing building with steel decking and concrete or masonry walls	62
3.5.5.2d	Strengthening an existing building with steel decking and concrete or masonry walls	63
3.6.1.2a	Underpinning an existing footing	66
3.6.1.2b	Strengthening an existing wall footing by the addition of drilled piers	67
3.6.2.3	Upgrading an existing pile foundation	71
3.7.1.2a	Strengthening the connection of a diaphragm to an interior shear wall (wall parallel to floor joist)	73
3.7.1.2b	Strengthening the connection of a diaphragm to an interior shear wall (wall perpendicular to floor joist)	74
3.7.1.3	Strengthening an existing wood stud shear wall with a large opening	76
3.7.1.4a	Strengthening out-of-plane connections of a wood diaphragm	77
3.7.1.4b	Strengthening out-of-plane connections of a wood diaphragm	78
3.7.1.4c	Strengthening out-of-plane connections of a wood diaphragm	79
3.7.1.4d	Strengthening out-of-plane connections of a wood diaphragm	80
3.7.1.4e	Strengthening tensile capacity of an existing glulam beam connection	80
3.7.1.5a	Strengthening the connection between shear walls using a metal strap	81
3.7.1.5b	Strengthening the connection between shear walls using a hold-down	82
3.7.1.5c	Strengthening shear wall uplift capacity at a discontinuity	83
3.7.2.2	Use of a collector member to improve shear transfer from a concrete diaphragm	85
3.7.5.2	Strengthening the connection of steel deck diaphragm to a concrete or masonry wall	88
3.8.1.2a	Providing wall to foundation anchors	92
3.8.1.2b	Alternate detail for providing wall to foundation anchors	93
3.8.1.3	Strengthening a cripple stud wall	94
3.8.1.4	Strengthening the uplift capacity of a wall to foundation connection	95
3.8.3.2	Strengthening a precast concrete wall to foundation connection	96
3.9.1	Strengthening using a supplemental braced frame system	99
3.9.2	Strengthening by providing a new shear wall system	100
3.9.3	Strengthening with a new building addition	101
5.1a	Flexible connection for precast concrete cladding	107
5.1b	Detail for flexible connection for precast concrete cladding	108
5.2a	Strengthening a masonry parapet with a new concrete overlay	109
5.2b	Strengthening a masonry parapet with steel braces	109
5.4a	Bracing an interior masonry partition	111
5.4b	Bracing an interior masonry partition	112
5.5	Lateral bracing of a suspended ceiling	113
5.6	Providing safety wires for suspended lighting fixtures	114
5.8a	Access floor pedestals	115
5.8b	Strengthening of access floor pedestals	116

6.1a	Typical detail of equipment anchorage	118
6.1b	Alternate details for anchoring equipment	119-120
6.1c	Prefabricated vibration isolation assembly with lateral seismic stops	121
6.1d	Seismic restraints added to existing equipment with vibration isolation	122
6.1e	Multidirectional seismic restraint	123
6.1f	Typical bracing for suspended equipment	124
6.1g	Strapping of domestic water heater	125
6.2a	Lateral and longitudinal braces for large diameter ducting	127
6.2b	Lateral and longitudinal braces for small diameter ducting	128
6.2c	Lateral and longitudinal braces for rectangular ducting	129
6.2d	Lateral braces for piping	130
6.2e	Longitudinal pipe brace	131
6.2f	Lateral brace for multiple pipes	132
6.2g	Longitudinal brace for multiple pipes	132
6.4a	Bracing of existing battery racks	133
6.4b	Bracing of horizontal tank	134
6.5a	Protective measures for hazardous materials	135
6.5b	Anchorage detail for pressurized tanks	136
6.7a	Rigid anchorage of computer equipment	138
6.7b	Flexible anchorage of computer equipment	139
6.7c	Tether and opening guards for protection of computer equipment	140
6.7d	Strapping of electronic data processing units	141

GLOSSARY

BOUNDARY ELEMENT: An element at the edge of an opening or at the perimeter of a shear wall or diaphragm.

BRACED FRAME: An essentially vertical truss, or its equivalent, of the concentric or eccentric type that is provided in a building frame or dual system to resist lateral forces.

CHEVRON BRACING: Bracing where a pair of braces, located either both above or both below a beam, terminates at a single point within the clear beam span.

CHORD: See DIAPHRAGM CHORD.

COLLECTOR: A member or element provided to transfer lateral forces from a portion of a structure to vertical elements of the lateral-force-resisting system (also called a drag strut).

CONCENTRICALLY BRACED FRAME (CBF): A braced frame in which the members are subjected primarily to axial forces.

CONTINUITY TIES: Structural members and connections that provide a load path between diaphragm chords to distribute out-of-plane wall loads.

COUPLING BEAM: A structural element connecting adjacent shear walls.

DAMPING: The internal energy absorption characteristic of a structural system that acts to attenuate induced free vibration.

DEMAND: The prescribed design forces required to be resisted by a structural element, subsystem, or system.

DIAPHRAGM: A horizontal, or nearly horizontal, system designed to transmit lateral forces to the vertical elements of the lateral-force-resisting system. The term "diaphragm" includes horizontal bracing systems.

DIAPHRAGM CHORD: The boundary element of a diaphragm or shear wall that is assumed to take axial tension or compression.

DIAPHRAGM STRUT: The element of a diaphragm parallel to the applied load that collects and transfers diaphragm shear to vertical-resisting elements or distributes loads within the diaphragm. Such members may take axial tension or compression. Also refers to drag strut, tie, collector.

DRAG STRUT: See COLLECTOR.

DRIFT: See STORY DRIFT.

DUCTILITY: The ability of a structure or element to dissipate energy inelastically when displaced beyond its elastic limit without a significant loss in load carrying capacity.

ECCENTRICALLY BRACED FRAME (EBF): A diagonal braced frame in which at least one end of each brace frames into a beam a short distance from a beam-column joint or from another diagonal brace.

FUNDAMENTAL PERIOD OF VIBRATION: The time it takes the predominant mode of a structure to move back and forth when vibrating freely.

HOLD-DOWN: A prefabricated steel element consisting of a tension rod, end brackets and bolts or lags used to transfer tension across wood connections.

HORIZONTAL BRACING SYSTEM: A horizontal truss system that serves the same function as a diaphragm.

K-BRACING: Bracing where a pair of braces located on one side of a column terminates at a single point within the clear column height.

LATERAL-FORCE-RESISTING SYSTEM: That part of the structural system assigned to resist lateral forces.

LINK BEAM: That part or segment of a beam in an eccentrically braced frame that is designed to yield in shear and/or bending so that buckling or tension failure of the diagonal brace is prevented.

MOMENT RESISTING SPACE FRAME: A structural system with an essentially complete space frame providing support for vertical loads.

REDUNDANCY: A measure of the number of alternate load paths that exist for primary structural elements and/or connections such that if one element or connection fails, the capacity of alternate elements or connections are available to satisfactorily resist the demand loads.

RE-ENTRANT CORNER: A corner on the exterior of a building that is directed inward such as the inside corner of an L-shaped building.

SHEAR WALL: A wall, bearing or nonbearing, designed to resist lateral forces acting in the plane of the wall.

SHOTCRETE: Concrete that is pneumatically placed on vertical or near vertical surfaces typically with a minimum use of forms.

SOFT STORY: A story in which the lateral stiffness is less than 70 percent of the stiffness of the story above.

SOIL-STRUCTURE RESONANCE: The coincidence of the natural period of a structure with a dominant frequency in the ground motion.

STORY DRIFT: The displacement of one level relative to the level above or below.

STRUCTURE: An assemblage of framing members designed to support gravity loads and resist lateral forces. Structures may be categorized as building structures or nonbuilding structures.

SUBSYSTEMS: One of the following three principle lateral-force-resisting systems in a building: vertical-resisting elements, diaphragms, and foundations.

SUPPLEMENTAL ELEMENT: A new member added to an existing lateral-force-resisting subsystem that shares in resisting lateral loads with existing members of that subsystem.

V-BRACING: Chevron bracing that intersects a beam from above. Inverted V-bracing is that form of chevron bracing that intersects a beam from below.

VERTICAL-RESISTING ELEMENTS: That part of the structural system located in a vertical or near vertical plane that resists lateral loads (typically a moment frame, shear wall, or braced frame).

WEAK STORY: A story in which the lateral strength is less than 80 percent of that in the story above.

X-BRACING: Bracing where a pair of diagonal braces crosses near mid-length of the bracing members.

1

INTRODUCTION

The risks posed by buildings not designed for earthquake loads or by nonengineered buildings have been recognized for nearly a century. Advances in earthquake-related science and technology during the past few decades have led to a realization that earthquakes and the resulting risk to life are a national problem. Indeed, damaging earthquakes in the eastern United States, although occurring less frequently than in California, may pose an equal, if not greater, threat to the national economy and social fabric.

The benefits of applying earthquake-resistant design to reduce the hazards of new buildings were acknowledged in California following the 1906 San Francisco earthquake but appropriate design practices were not implemented to any degree until after the disastrous 1933 earthquake in Long Beach, California. Today, earthquake-resistant design in new construction is accepted practice in California but has been only recently achieved a significant degree of acceptance in other parts of the United States. Thus, a very large number of existing buildings in the country can be presumed to have inadequate earthquake resistance and to pose a serious risk.

Detailed post-earthquake investigations of building failures have provided engineers with considerable information concerning the details of building design and construction that enhance earthquake resistance. The 1971 earthquake in San Fernando, California, was particularly revealing in this regard and engendered a new wave of concern for seismic rehabilitation of existing buildings. Notable among the earthquake rehabilitation projects begun in the 1970s was the systematic seismic vulnerability evaluation, and strengthening as needed, of all Veterans Administration (VA) hospitals in the United States. Concurrently, other federal agencies such as the Department of Defense (DOD) and the General Services Administration (GSA) initiated programs to identify and mitigate seismic hazards in public buildings under their authority. These and similar projects have generated a substantial body of knowledge regarding earthquake rehabilitation of buildings. The Loma Prieta earthquake seems to have added impetus to seismic rehabilitation in the private sector. (Note that the greatest experience in seismic rehabilitation has been gained in high seismic zones; see Sec. 3.0.4 for guidance concerning the application of seismic rehabilitation techniques in areas of lower seismicity.)

1.1 BACKGROUND

One of the objectives of the *Earthquake Hazards Reduction Act of 1977* (P.L. 95-124 as amended) is ". . . the development of methods for . . . rehabilitation and utilization of man-made works so as to effectively resist the hazards imposed by earthquakes. . . ." The National Earthquake Hazards Reduction Program submitted to the Congress by the President on June 22, 1978, stresses that absent a reliable capability to predict earthquakes, "it is important that hazards be reduced from those (substandard) structures presenting the greatest risks in terms of occupancy and potential secondary impact."

In Fiscal Year 1984, FEMA started an extensive program to encourage the reduction of seismic hazards posed by existing buildings throughout the country. The first project in the program was the formulation of a comprehensive 5-year plan on what needed to be done and what the required resources would be. The plan was completed in Fiscal Year 1985. As resources have become available since that time, FEMA has used this plan as a basis for developing a multi-volume, self-reinforcing, cohesive, coherent set of nationally applicable publications on engineering measures and societal problems related to the seismic rehabilitation of existing buildings. These publications include reports presenting a method for rapid visual screening of buildings, an engineering methodology for a seismic safety evaluation of different types of buildings that is a companion to this document, seismic strengthening techniques for various types of buildings (this handbook), typical costs of seismic rehabilitation of existing buildings, an approach to establishing programs and priorities for seismic rehabilitation of existing buildings, potential financial incentives for establishing such programs and instructions

on the conduct of workshops to encourage local initiatives in this field and conclusions from a number of applications workshops held in various states, and a model to derive direct economic costs and benefits to owners and occupants of buildings in the private sector. Further, the preparation of a comprehensive set of guidelines for seismic rehabilitation (with commentary) has been initiated.

1.2 DEVELOPMENT OF THIS HANDBOOK

Recognizing that a large number of techniques currently are being utilized to mitigate seismic hazards in existing vulnerable buildings, the FEMA contracted with URS/John A. Blume and Associates, Engineers, (referred to herein as URS/Blume) in 1987 to identify and describe generally accepted rehabilitation techniques. This URS/Blume effort resulted in the preliminary version of this handbook published by FEMA in March 1989. It was based primarily on a review of existing literature and input from a panel of project consultants. The primary source documents and sources reviewed included *The Abstract Journal of Earthquake Engineering*, the Earthquake Engineering Research Center Library at the University of California at Berkeley, the proceedings of the World, U.S. National, and European Conferences on Earthquake Engineering, the U.S./Japan Seminars on Repair and Retrofit of Structures, the Dialogue Compendex, and the National Technical Information Service (NTIS).

The Building Seismic Safety Council (BSSC) project, initiated at the request of FEMA in October 1988, was structured to focus on identification and resolution of technical issues in the preliminary version of the handbook (as well as in a companion publication presenting a methodology for conducting an evaluation of the seismic safety of existing buildings) and appropriate revision by a 22-member Retrofit of Existing Buildings (REB) Committee composed of individuals possessing expertise in the various subjects needed to address seismic rehabilitation. Conduct of the BSSC project is discussed in the Preface (see page v).

1.3 PURPOSE OF THIS HANDBOOK

There is a variety of approaches to seismic rehabilitation, each with specific merits and limitations. The rehabilitation technique most appropriate for use with a particular building will depend on the unique characteristics of the building. Thus, this handbook is to provide those interested or involved in seismic rehabilitation with:

- A general understanding of the common deficiencies in the structural and nonstructural components of existing buildings that cause seismic performance problems,
- Descriptions of some of the techniques that might be used to correct deficiencies for various construction types, and
- Information on the relative merits of alternative techniques.

In short, this handbook is intended to stimulate understanding such that, when assessing the rehabilitation alternatives available, building owners and design professionals can make an informed decision concerning the best solution for a specific building, location, and occupancy.

This handbook is designed to be compatible with the *NEHRP Handbook for the Seismic Evaluation of Existing Building* (referred to herein as the *NEHRP Evaluation Handbook*), which provides a standard methodology for evaluating buildings of different types and occupancies in areas of different seismicity throughout the United States. Seismic deficiencies of buildings identified using the *NEHRP Evaluation Handbook* methodology can be further analyzed to determine the seismic resistance. The deficiencies identified then can be mitigated using accepted rehabilitation techniques described in this handbook or other sources of rehabilitation information.

1.4 SCOPE AND LIMITATIONS

The rehabilitation techniques identified and described in this handbook are intended to be consistent with the requirements for new construction prescribed in the 1988 Edition of the *NEHRP Recommended Provisions for the Development of Seismic Regulations for New Buildings* (FEMA Publications 95, 96, and maps).* The intent of the rehabilitation is to provide life safety but not necessarily to upgrade the structure to meet modern standards of life safety and property protection.

Given the great number of potential seismic strength problems and solutions, it is not now possible to prepare a compendium of all available techniques for all existing building types in all areas of the nation at risk from earthquakes. In recognition of the broad variation in the details of design and construction used over the years, the design professional will need to consider a wide array of possible techniques for rehabilitation, and this handbook is intended to serve as an informational "point of departure."

This handbook is organized to permit a component-by-component consideration of deficiencies and rehabilitation techniques. The reader, however, is cautioned against selecting specific rehabilitation techniques without first identifying the overall deficiencies of the building and determining whether deficiencies are due to a combination of component deficiencies, inherent adverse design and construction features, or a weak link.

Furthermore, a building's design and construction characteristics as well as the condition of materials of its construction affect seismic performance. Therefore, in order to make an informed decision concerning appropriate cost-effective techniques for seismic strengthening of an existing building, the engineer must understand the structural system or combination of systems that resist the lateral loads; the advantages and disadvantages associated with the physical attributes of the systems; and any constraints on the optimum performance of the system due to adverse design or construction features or deteriorated materials.

It is hoped that experience with the application of this handbook and its companion document will generate feedback that can serve as the foundation for the enhancement of future documents dealing with seismic rehabilitation.

1.5 ORGANIZATION OF THIS HANDBOOK

Chapter 2 describes the physical attributes that affect the seismic performance of all structures. The general characteristics of all structural materials and systems (i.e., strength, stiffness, ductility, and damping) are addressed as are design and construction features that may impair a building's seismic performance. Techniques for strengthening vertical elements, diaphragms, foundations, and connections are addressed in Chapter 3. Techniques for decreasing the demand on existing structures are addressed in Chapter 4. Chapters 5 and 6 present techniques to mitigate damage to nonstructural architectural and mechanical and electrical components, respectively. Appendices include a listing of the seismic-force-resisting elements commonly found in 15 common building types, a matrix summary of rehabilitation techniques, and examples of rehabilitation.

As indicated above, this handbook is structured to be used with the *NEHRP Evaluation Handbook*. Both of these handbooks are organized to address the following building systems and components: vertical elements resisting horizontal loads (i.e., moment-resisting frames, shear walls, and braced frames); horizontal elements resisting lateral loads (i.e., diaphragms); foundations; and connections between subsystems. Table 1.5 shows the relationship between the handbooks.

---

*The American Iron and Steel Institute has written a minority opinion concerning this statement; see page 193.

TABLE 1.5
Correlation of Contents Between the Evaluation and Techniques Handbooks

NEHRP Handbook of Techniques for the Seismic Rehabilitation of Existing Buildings	*NEHRP Handbook for the Seismic Evaluation of Existing Buildings*
Chapter 2, Seismic Vulnerability of Buildings Section 3.9, Adding a New Supplemental System Chapter 4, Decreasing Demand on Existing System	Chapter 3, Building Systems
Section 3.1, Moment Resisting Systems	Chapter 4, Moment Resisting Systems
Section 3.2, Shear Walls	Chapter 5, Shear Walls
Section 3.3, Braced Frames	Chapter 6, Braced Frames
Section 3.5, Diaphragms	Chapter 7, Diaphragms
Section 3.7, Diaphragm to Vertical Element Connections Section 3.8, Vertical Element to Foundation Connections	Chapter 8, Connections
Section 3.6, Foundations	Chapter 9, Foundations and Geologic Site Hazards
Chapter 5, Rehabilitation of Nonstructural Architectural Components Chapter 6, Rehabilitation of Nonstructural Mechanical and Electrical Components	Chapter 10, Elements Not a Part of the Lateral-Force-Resisting System

2

SEISMIC VULNERABILITY OF BUILDINGS

2.0 INTRODUCTION

This chapter describes the general characteristics of all structural materials and systems (i.e., strength, stiffness, ductility, and damping) and the design and construction features that may adversely affect the seismic performance of a structure. Since an informed decision regarding the most cost-effective techniques for rehabilitating an existing structure to resist seismic forces requires an understanding of the structural system or combination of systems that resist the lateral loads, the advantages or disadvantages associated with the physical attributes of the systems and the constraints on system performance due to adverse design or construction features, the emphasis here is on the complete structural system. Chapter 3 focuses on techniques to strengthen the three principal lateral-force-resisting subsystems (vertical-resisting elements, diaphragms, and foundations) and the connections between these subsystems. Chapter 4 identifies methods to rehabilitate structures by reducing demand.

2.1 GENERAL ATTRIBUTES OF STRUCTURES

Strength, stiffness, ductility, and damping govern the dynamic response of a structure to ground motion. An ideal structure would rate highly with respect to all of these attributes; however, this is seldom the case even in new construction and may be impossible to achieve when strengthening an existing structure. Fortunately, these attributes are interrelated, and it is usually possible to compensate for a deficiency in one by enhancing one or more of the others (e.g., additional strength and stiffness may compensate for low ductility and damping, a subject discussed in Chapter 4).

2.1.1 STRENGTH

The most obvious, although not necessarily the most important, consideration in seismic rehabilitation is strength. A seismically weak structure can be rehabilitated by strengthening existing members or by adding new members that increase the overall strength of the structure. Many of the rehabilitation techniques presented in this handbook are aimed at increasing strength, and informed identification of the building elements that should be strengthened can lead to significant cost savings in an upgrading scheme.

2.1.2 STIFFNESS

As indicated by the base shear formula in the 1988 *NEHRP Recommended Provisions*, structural stiffening that reduces the fundamental period of the building may result in higher seismic forces to be resisted by the building. Nonetheless, additional stiffening generally will reduce the potential for seismic damage. Drift limitations specified by most building codes are intended to provide for minimum structural stiffness.

Transfer of loads among the elements of a structure depends on the relative stiffness of those elements. To select the most appropriate technique for seismically rehabilitating a structure, it is important to evaluate the stiffness of both the existing elements and those to be added to ensure that the seismic load path is not altered in a way that creates new problems. To contribute effectively, an added element must be stiff enough relative to the existing lateral-force-resisting elements to attract sufficient load away from the existing system. The location of an added member and, therefore, the added stiffness it contributes also is important. The engineer

should attempt to locate new elements in such a way as to minimize eccentricities in the building and limit torsional responses.

2.1.3 DUCTILITY

The ductility of a structure or element (i.e., the ability of the structure or element to dissipate energy inelastically when displaced beyond its elastic limit without a significant loss in load carrying capacity) is an extremely important consideration in seismic rehabilitation. The structural properties of some materials have a post-elastic behavior that fits the classic definition of ductility (i.e., they have a near-plastic yield zone and this behavior is reasonably maintained under cyclic loading). Other materials such as reinforced concrete and masonry, nailed wood systems, braced frames, and floor diaphragms have stiffness degradation and may even exhibit a pinched load-displacement relationship when subjected to cyclic loading. The hysteretic damping of these materials may not increase as is common for the elastic-plastic behavior but the stiffness degradation has a beneficial influence similar to an increase in damping in that the base shear of the system is reduced. However, the interstory and total relative displacement of the stiffness degrading structure or element is significantly increased. Control of relative displacement of this class of structure or element is of prime importance.

2.1.4 DAMPING

During an earthquake, a structure will amplify the base ground motion. The ground motion at the base includes the amplification caused by soil profile type through the inclusion of a soil profile coefficient in the base shear formula. The degree of structural amplification of the ground motion at the base of the building is limited by structural damping or the ability of the structural system to dissipate the energy of the earthquake ground-shaking. The differences in the response modification coefficient (R) and the deflection amplification factor (C_d) of Table 3-2 of the 1988 *NEHRP Recommended Provisions* are partially due to an estimation of probable structural damping of greater than 5 percent of critical.

2.2 ADVERSE DESIGN AND CONSTRUCTION FEATURES

A number of design and construction features have an adverse impact on structural response by precluding the effective development of the capacity of the various structural components.

2.2.1 LACK OF DIRECT LOAD PATH

An adequate load path is the most essential requirement for seismic resistance in a building. There must be a lateral-force-resisting system that forms a direct load path between the foundation, the vertical elements, and all diaphragm levels and that ties all portions of the building together. The load path must be complete and sufficiently strong. The general path is as follows:

- Earthquake inertia forces, which originate in all elements of a building, are delivered through structural connections to horizontal diaphragms;
- The diaphragms distribute these forces to vertical components of the lateral-force-resisting system such as shear walls and frames;
- The vertical elements transfer the forces into the foundation; and
- The foundation transfers the forces into the ground.

The load path therefore consists of elements within and between the following subsystems: vertical-resisting elements, diaphragms, and foundations.

2.2.2 IRREGULARITIES

Most building codes prescribe seismic design forces that are only a fraction of the forces that would be imposed on a linearly elastic structure by a severe earthquake. These codes therefore imply that the inelastic response of the designed structures is required to fulfill the primary performance objective (i.e., preserve life safety by precluding structural collapse). The equivalent static lateral loads and design coefficients prescribed by the codes are necessarily imperfect approximations of the nonlinear dynamic response of code-designed regular structures. Vertical and plan irregularities can result in loads and deformations significantly different from those assumed by the equivalent static procedures. It is most important for the engineer to understand that severe irregularities can create uncertainties in the ability of the structure to meet the stated performance objectives. Irregular conditions exist, to some degree, in most buildings. Minor irregularities have little or no detrimental effect on structural response. Guidelines for the evaluation of the significance of the vertical and horizontal or plan irregularities are provided in the *NEHRP Evaluation Handbook*). If a significant irregular condition cannot be avoided or eliminated by design changes, the designer should both comply with any special provisions prescribed by the code and consider the ability of the structure to avoid collapse when subjected to relative displacements that may be several times greater than the anticipated nonlinear displacements.

2.2.2.1 Vertical Irregularities

The vertical irregularities that may adversely affect a building's seismic resistance are discussed briefly below.

Stiffness irregularity results when one or more stories are significantly softer (i.e., will be subject to larger deformations) than the stories directly above.

Weight or mass irregularity occurs when the effective mass (i.e., weight divided by the acceleration due to gravity) of any story is substantially greater than the effective mass of an adjacent story.

Vertical geometric irregularity results from building setbacks or elevational discontinuities (i.e., when the upper portions of a building are reduced in plan area with respect to the lower portions).

Vertical discontinuity in capacity occurs when the story strength in a story is significantly less than that in the story above. The story strength is defined as the total strength of all the seismic-resisting elements sharing the story shear for the direction under consideration.

Vertical discontinuity in load path is a condition where the elements resisting lateral forces (i.e., moment frames, shear walls, or braced frames) are not continuous from one floor to the next. Figure 2.2.2.1 shows two common examples. The upper sketch shows an "out-of-plane" vertical discontinuity that causes the vertical load path to be discontinuous. In the upper sketch, the shear walls of the second and third stories are exterior shear walls while the shear walls in the first floor are interior walls. The seismic forces from the top two stories must be transferred through the second floor diaphragm and then into the first floor shear wall. The discontinuity results in very high forces on the diaphragm. The lower sketch in Figure 2.2.2.1 is an example of an in-plane discontinuity with a potential for overturning forces in excess of the capacity of the column.

The usual deficiency in the diaphragm is inadequate shear capacity. Unlike typical floor diaphragms that need only transfer tributary seismic floor shears, the diaphragm at the base of a discontinuous shear wall must transfer the cumulative seismic shears in the shear wall from all of the levels above the discontinuity. A typical cause of distress in concrete columns at the ends of discontinuous shear walls is inadequate capacity to resist the overturning loads from the discontinuous wall above. For many years, seismic provisions in building codes have prescribed factored design loads for shear walls that were in excess of those required for columns. Thus, in a severe earthquake, the discontinuous shear wall was capable of generating overturning forces in excess of the capacity of the supporting columns. During the 1979 Imperial County Earthquake in California, the 6-story County Services Building was irreparably damaged when a number of the first story columns under discontinuous shear walls collapsed due to excessive overturning forces. As a result of that earthquake, current code provisions discourage vertical discontinuities and require special strengthening of columns if the discontinuities cannot be avoided.

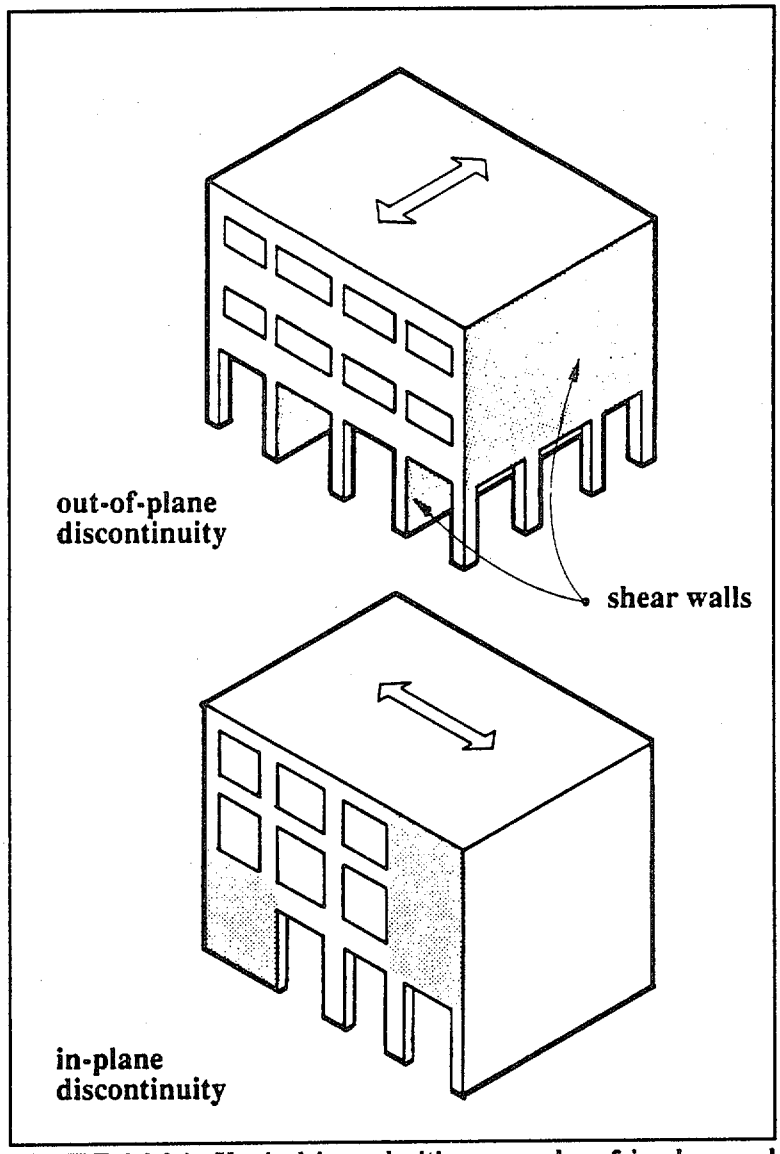

FIGURE 2.2.2.1 Vertical irregularities--examples of in-plane and out-of-plane discontinuities.

2.2.2.2 Rehabilitation Techniques for Vertical Irregularities

The obvious remedial technique for any irregularity is to modify the existing structural elements or add new structural elements to eliminate or significantly reduce the irregularity. The engineer must take special care to avoid creating greater or new problems in the existing elements. For example, if vertical bracing is used to increase the strength of a weak story, it is important to determine the effect that this modification will have on the story stiffness (i.e., whether it will create a soft story condition in the stories below), whether it will create significant torsional eccentricity (see Sec. 2.2.2.3), and/or whether the load path in the diaphragms above and below will be adequate for the revised distribution and transfer of the shear forces. If a new shear wall is added in a shear wall building to increase story strength or stiffness, the same concerns must be investigated. Extending the new shear wall to the foundation level is one way to avoid the vertical discontinuity. Vertical supports below the wall also should be investigated to determine their capacity to resist realistic overturning forces.

It may not be feasible to eliminate or reduce some weight or mass irregularities (e.g., a heavy boiler extending through several stories of an industrial building) or elevational irregularities (e.g., building setbacks). If the irregularity cannot be eliminated or significantly reduced, a dynamic analysis that will better represent the structural response may be required to identify the appropriate location for needed strengthening and its extent.

A common technique for improving the seismic performance of structures with vertical discontinuities in load path is to strengthen the columns below the discontinuity (with methods such as those discussed in Chapter 3) so that they can resist the vertical forces that can be imposed by overturning moments of the above walls. The diaphragm spanning between the discontinuous vertical-resisting elements also may require strengthening. Alternatively, the discontinuity can be eliminated of new vertical-resisting elements are built directly below the existing vertical-resisting elements; however, the effect the new members will have on the functional space of the building must be evaluated.

2.2.2.3 Horizontal or Plan Irregularities

Plan structural irregularities in buildings that may adversely affect a building's seismic resistance are discussed briefly below.

Torsional irregularity occurs in buildings with rigid diaphragms when the center of mass in any story is eccentric with respect to the center of rigidity of the vertical lateral-load-resisting elements. Nominal eccentricity, or torsion, is common in most buildings and many building codes require that an accidental eccentricity (usually prescribed as 5 percent of the maximum plan dimension) be added to the actual computed eccentricity to determine the torsional forces. An exception occurs when a floor or roof diaphragm is relatively flexible with respect to the vertical lateral-load-resisting elements (e.g., a nailed wood diaphragm in a building with concrete or masonry shear walls). In this case, the vertical elements are assumed to resist only tributary seismic loads. Note that by making this assumption the effects of torsion may be neglected. In some cases (e.g., steel floor or roof decking in a building with steel moment frames), the relative rigidity of the diaphragm may be difficult to assess and the designer may elect to distribute the seismic loads on the basis of a rigid diaphragm and by tributary area and then to use the more conservative results from the two methods.

Re-entrant corners in the plan configuration of an existing structure (and its lateral-force-resisting system) create excessive shear stresses at the corner.

Diaphragm discontinuity occurs when a diaphragm has abrupt discontinuities or variations in stiffness. A common diaphragm discontinuity is split level floors. Unless proper members exist either to transfer the diaphragm forces between the split levels or to independently transfer the forces via vertical members to the foundation, damage is likely to occur at the interface. This condition also exists when diaphragms have large cutout or open areas or substantial changes in effective diaphragm stiffness from one story to the next.

Nonparallel systems is the condition that occurs when the vertical lateral-force-resisting elements are not parallel to or symmetric about the major orthogonal axes of the lateral-force-resisting system.

2.2.2.4 Rehabilitation Techniques for Horizontal Irregularities

The seismic rehabilitation of a structure with a large eccentricity, due either to the distribution of the vertical-resisting elements or the distribution of the mass in the building, is best accomplished by reducing the eccentricity. Locating stiff resisting elements that reduce the eccentricity (Figure 2.2.2.4a) reduces the forces and stresses due to torsion and increases the lateral-force-resisting capacity of the entire structure. The seismic deformations of the entire structure also are significantly reduced by strategically locating the new walls to minimize torsion. The most direct rehabilitation technique for excessive shear stresses at a re-entrant corner is to provide drag struts to distribute the local concentrated forces into the diaphragm (Figure 2.2.2.4b). Other alternatives include strengthening the diaphragm with overlays and reducing the loads on the diaphragm by providing additional vertical-resisting elements.

Diaphragm discontinuities due to abrupt changes in stiffness can be improved by developing a gradual transition through selective stiffening of the diaphragm segments adjacent to the stiff elements. Stress concentrations in the diaphragm at the corners of large openings can be reduced by providing collector members or drag struts to distribute the forces into the diaphragm.

Improving deficient conditions caused by diaphragm discontinuities (such as may be present in split level framing) can be accomplished by providing an adequate load path for the lateral forces. Figure 2.2.2.4c illustrates strengthening techniques for a split level floor diaphragm in typical residential construction. The figure shows two existing diaphragms at an interior cripple stud wall. The deficiency is the lack of a direct force path for diaphragm shears normal to the plane of the figure. The new construction provides vertical sheathing, blocking, and appropriate nailing to transfer the shears from both diaphragms to the foundation. For additional information and connection details for addressing split level conditions in wood frame construction see *The Home Builder's Guide for Earthquake Design* by (Shapiro, Okino, Hom and Associates, 1980).

Structures with nonparallel systems can be strengthened by ensuring that there is an adequate load path for the various force components resulting from the transfer of shears from the diaphragm to the vertical lateral-load-resisting systems. A structure with a nonparallel system is shown in Figure 2.2.2.4d. Providing a drag strut at the corner as indicated will distribute into the diaphragm the out-of-plane force component at the intersection of the two shear walls.

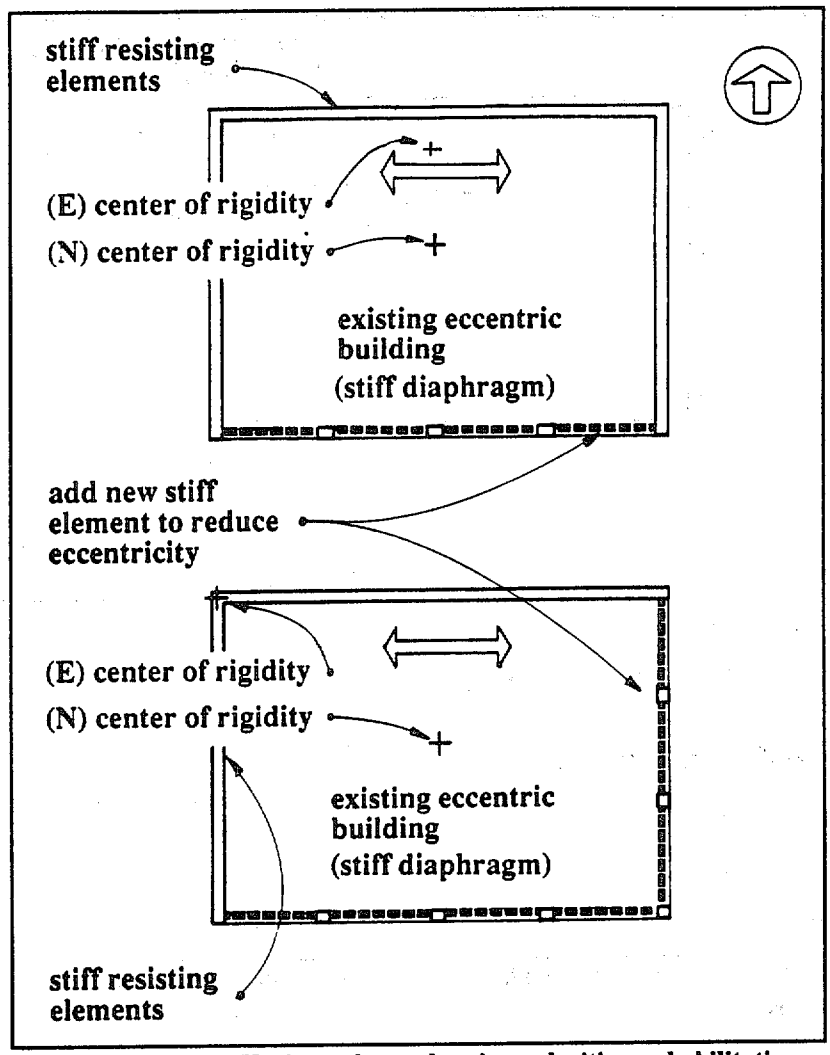

FIGURE 2.2.2.4a Horizontal or plan irregularities--rehabilitating a structure to reduce torsional loads.

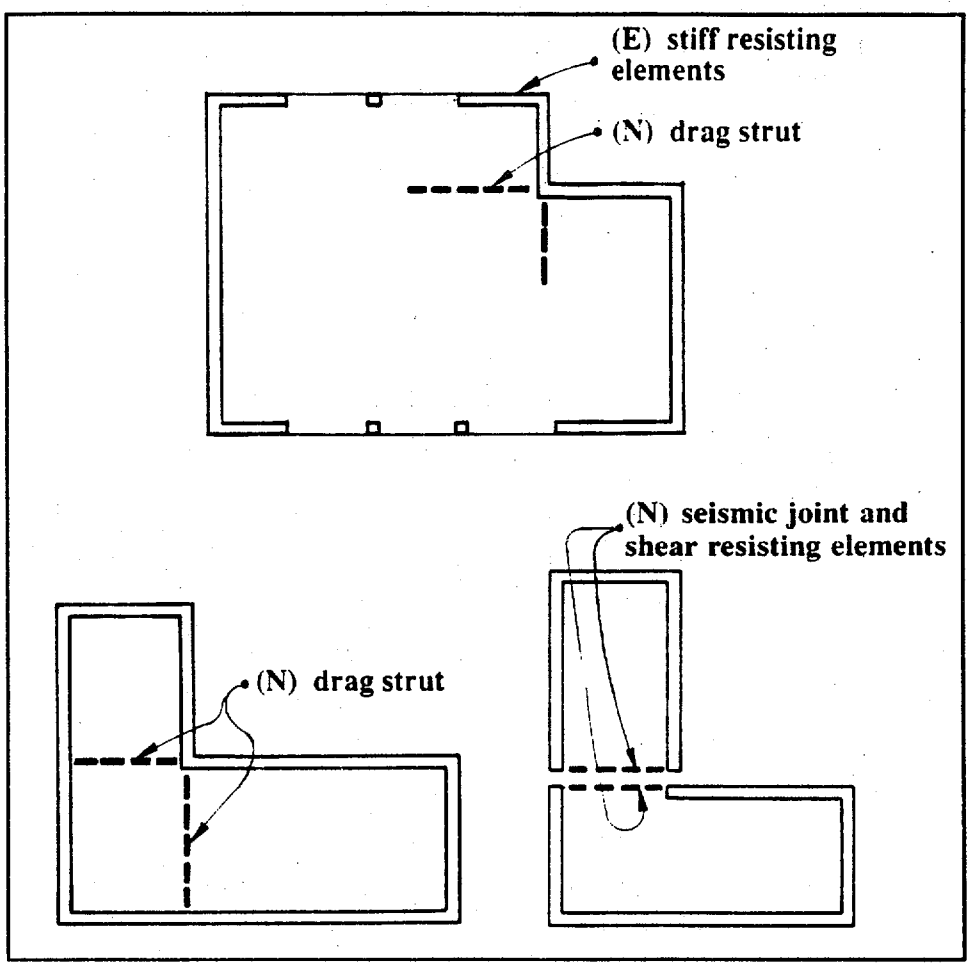

FIGURE 2.2.2.4b Horizontal or plan irregularities--rehabilitating buildings with re-entrant corners.

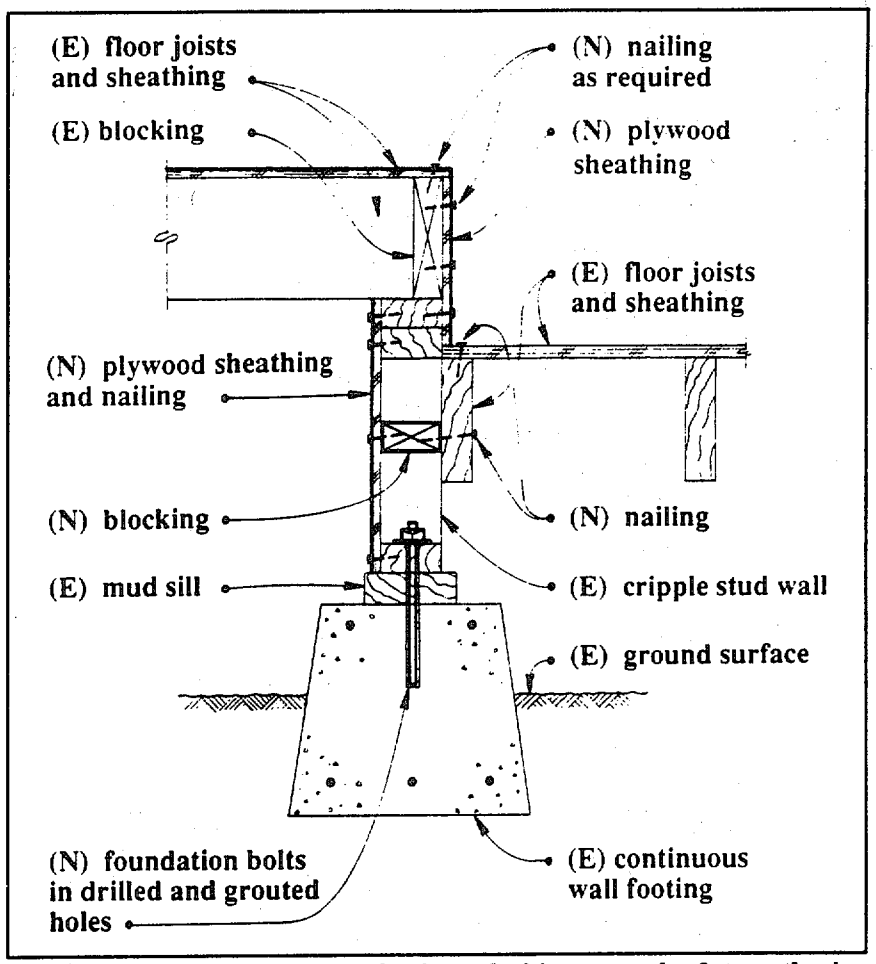

FIGURE 2.2.2.4c Horizontal or plan irregularities--example of strengthening a split level diaphragm.

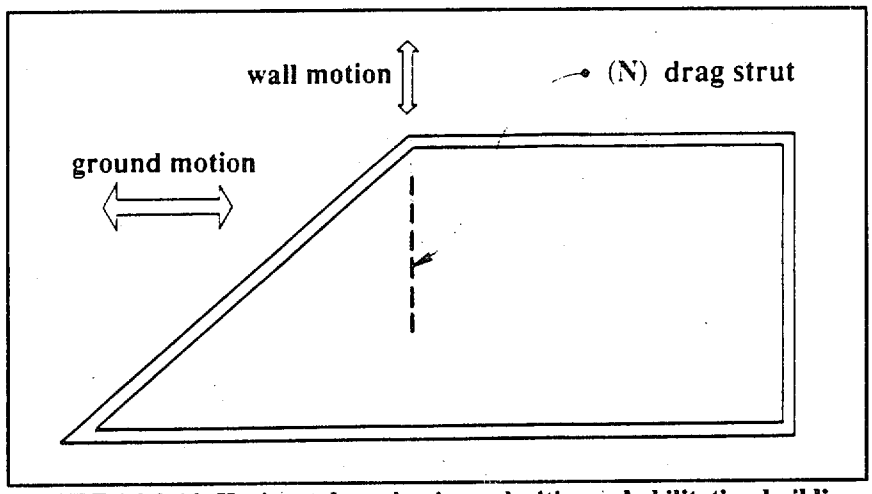

FIGURE 2.2.2.4d Horizontal or plan irregularities--rehabilitating building with nonparallel systems.

2.2.2.5 Reduction of Irregularities and Re-Analysis

The irregularities discussed above will affect the dynamic response of a structure to seismic ground motion and may invalidate the approximation made in the code-prescribed equivalent static lateral force analysis. The *NEHRP Evaluation Handbook* presents thresholds at which these effects may be considered significant but they are necessarily subjective and should be used with judgment, particularly when a structure has more than one of the above irregularities. Although a linear elastic dynamic analysis will help to identify the location and extent of the irregular responses, any analysis is subject to the validity of the model and, for an existing structure, there may be many uncertainties in the modeling assumptions. Also, as indicated above, the uncertainties associated with the extrapolation of results of linear elastic analyses to obtain estimates of nonlinear response increase greatly when the structure is highly irregular or asymmetrical. For these reasons, structural modifications associated with seismic upgrading of an irregular building should aim primarily to eliminate or significantly reduce the irregularity. The illustration in the lower portion of Figure 2.2.2.4b is an example of an irregular building divided into two separate, regular structures by providing a seismic separation joint. This concept requires careful structural and architectural detailing at the separation joint and may not be cost-effective as a retrofit measure except in cases where extensive alterations are planned for other reasons (e.g., an industrial structure being converted to light commercial or residential use).

Although the structural modifications described above to eliminate or reduce irregularities are intended to improve a structure's dynamic response and to increase its capacity to resist seismic forces, in some cases the modifications may shorten the building's period thereby increasing the seismic demand on the structure. For this reason, and also to evaluate the redistribution effects of any significant modifications, it is recommended a re-analysis be performed to identify the need for any additional modifications.

2.2.3 LACK OF REDUNDANCY

2.2.3.1 The Problem

Structures that feature multiple load paths are said to be redundant. Loads producing temporary seismic overstress of individual members or connections in a redundant structure may be redistributed to alternate load paths with the capacity to resist these seismic loads. The seismic capacity of structures that lack redundancy is dependent on adequate nonlinear behavior of the lateral-load-resisting elements. Engineering judgment should be used to ascertain the need for redundancy.

2.2.3.2 Rehabilitation Techniques for Lack of Redundancy

Rehabilitation techniques that enhance redundancy generally involve the addition of new lateral-load-resisting elements or new systems to supplement existing weak or brittle systems. For example, the addition of new steel braced frames or reinforced concrete shear walls in an existing concrete frame building will provide redundancy to the existing system. The relative rigidity of the new systems probably will dictate that little or none of the design lateral loads be resisted by the existing concrete frame, but if the new braced frames or shear walls are properly designed for ductile behavior as they yield in a severe earthquake, the lateral loads will be redistributed to take advantage of the capacity of the existing concrete frames. This example illustrates that ductility and an adequate load path are essential to the redistribution of loads in redundant systems.

2.2.4 LACK OF TOUGHNESS

2.2.4.1 The Problem

Toughness is defined here as the ability of a structure to maintain its integrity and preclude collapse during a severe earthquake that may cause significant structural damage.

2.2.4.2 Rehabilitation Techniques for Lack of Toughness

Existing connection details and those for new structural modifications should be evaluated for toughness. Although Chapter 3 identifies some techniques for strengthening connection deficiencies, the engineer must further evaluate these connections in terms of their performance under extreme structural loads and deformations. Codes may prescribe that some precautions be taken (e.g., oversizing connection requirements to avoid premature failure of bracing members and evaluating the deformation compatibility of vertical load-resisting members that are not part of the lateral-load-resisting system); however, other considerations (e.g., avoiding weld configurations that could lead to prying action or other stress concentrations) require engineering judgment. For some structural systems (e.g., steel moment frames), providing additional strength in the connections will increase the toughness of the system; however, in other systems (e.g., concrete moment frames), lack of toughness may require displacement control through the addition of stiffer elements or supplemental damping to protect the existing system.

2.2.5 ADJACENT BUILDINGS

2.2.5.1 The Problem

When the gap between buildings is insufficient to accommodate the combined seismic deformations of the buildings, both may be vulnerable to structural damage from the "pounding" action that results when the two collide. This condition is particularly severe when the floor levels of the two buildings do not match and the stiff floor framing of one building impacts on the more fragile walls or columns of the adjacent building.

2.2.5.2 Rehabilitation Techniques for Potential Impact from Adjacent Buildings

Since the gap between two buildings usually cannot be increased, increasing the stiffness of one or both buildings may reduce the seismic deformations to the point where impact is precluded with the existing gap. This technique, however, may not be feasible for stiff shear wall buildings of concrete or masonry and, for those cases, consideration should be given to providing alternative load paths for the vertical load-resisting members (i.e., bearing walls or columns) that may be damaged or destroyed by the impact. These alternative load paths would include supplementary columns or vertical shoring to support the floor or roof systems. These supplementary supports would be installed at sufficient distance from the vulnerable exterior walls or columns to be protected when the existing elements are damaged.

2.3 DETERIORATED CONDITION OF STRUCTURAL MATERIALS

2.3.1 THE PROBLEM

Structural materials that are damaged or seriously deteriorated may have an adverse effect on the seismic performance of an existing building during a severe earthquake. The significance of the damage or deterioration must be evaluated with respect to both the existing condition and the proposed seismic strengthening of the building.

2.3.1.1 Timber

Common problems with timber members that require rehabilitation include termite attack, fungus ("dry rot" or "damp rot"), warping, splitting, checking due to shrinkage, strength degradation of fire-retardant plywood in areas where high temperatures exist, or other causes.

2.3.1.2 Unreinforced Masonry

The weakest element in older masonry usually is the mortar joint, particularly if significant amounts of lime were used in the mortar and the lime was subsequently leached out by exposure to the weather. Thus, cracks in masonry walls caused by differential settlement of the foundations or other causes generally will occur in the joints; however, well-bonded masonry occasionally will crack through the masonry unit.

2.3.1.3 Unreinforced Concrete

Unreinforced concrete may be subject to cracking, spalling, and disintegration. Cracking may be due to excessive drying shrinkage during the curing of the concrete or differential settlement of the foundations. Spalling can be caused by exposure to extreme temperatures or the reactive aggregates used in some western states. Disintegration or raveling of the concrete usually is caused by dirty or contaminated aggregates, old or defective cement, or contaminated water (e.g., water with a high salt or mineral content).

2.3.1.4 Reinforced Concrete or Masonry

Reinforced concrete and masonry are subject to the same types of deterioration and damage as unreinforced concrete and masonry. In addition, poor or cracked concrete or masonry may allow moisture and oxygen to penetrate to the steel reinforcement and initiate corrosion. The expansive nature of the corrosion byproducts can fracture the concrete or masonry and extend and accelerate the corrosion process.

2.3.1.5 Structural Steel

Poorly designed structural steel members may trap moisture from rainfall or condensation under conditions that promote corrosion and subsequent loss of section for the steel member. Even well-designed steel members exposed to a moist environment require periodic maintenance (i.e., painting or other corrosion protection) to maintain their effective load-bearing capacity. Light structural steel members (e.g., small columns or bracing members) in some installations may be subject to damage from heavy equipment or vehicles. While such damage may have no apparent detrimental effect on the vertical-load-resisting capacity of the steel member, its reserve capacity for resisting seismic forces may be seriously impaired.

2.3.2 REHABILITATION TECHNIQUES FOR DETERIORATED CONDITION OF STRUCTURAL MATERIALS

Structural materials that exhibit evidence of damage or deterioration require careful evaluation. Even if affected structural elements are to be rehabilitated or replaced, it is important that the factors contributing to the damage or deterioration be eliminated or minimized. For example, vulnerable steel framing can be protected from heavy equipment or vehicles by concrete curbs or concrete encasement, poorly drained steel members and connections can be modified or replaced so as to provide positive drainage, and steel framing in moist environments can be painted or covered with other corrosion-resistant coatings.

If the deterioration is not severe and the apparent causes have been mitigated, the engineer may decide to assign a reduced capacity to the structural member and to perform a revised evaluation of the need for rehabilitation and/or strengthening.