APPENDIX C

REHABILITATION EXAMPLES*

Two examples are included in this appendix to demonstrate the process of selecting appropriate seismic rehabilitation techniques: a two-story steel frame building and a two story unreinforced masonry building. Both buildings were evaluated to determine their seismic deficiencies in accordance with the *NEHRP Handbook for the Seismic Evaluation of Existing Buildings* (which includes the evaluations as Examples D1 and D6 in Appendix D).

C1 TWO-STORY STEEL FRAME BUILDING EXAMPLE

C1.1 DESCRIPTION OF BUILDING

The building is 200 ft by 340 ft in plan with 20 ft by 20 ft bays. The girders in the transverse direction are connected to the column flanges with top and bottom clip angles. The beams in the longitudinal direction are connected to the column webs with beam web connections. The floor and roof diaphragms consists of steel decking with concrete fill.

C1.2 DEFICIENCIES

Inadequate moment capacity in both directions.

C1.3 STRENGTHENING ALTERNATIVES

This building could be strengthened by providing adequate moment capacity to the existing frames, by providing new diagonal bracing, and/or by providing new shear walls

C1.3.1 Providing Adequate Moment Capacity

Assuming that the first story shear of 2,970 kips can be equally distributed to all columns, it is calculated that there is excess capacity for the columns in the transverse direction (i.e., the strong axis of the columns) but grossly inadequate capacity for the columns in the longitudinal direction (i.e., the weak axis of the columns). This indicates that it is not feasible to develop adequate frame action to resist the seismic forces in the longitudinal direction, but it is feasible in the transverse direction. The structural modifications (Figure C1.3.1) required to develop moment frame action will involve:

1. Removal of the concrete fill and steel decking over the ends of the transverse girders at the columns. (It is assumed that the steel decking is supported on secondary floor beams that frame into the transverse frame girders so that there are no adverse effects associated with removal of the decking over top flanges of these girders adjacent to the columns.)

---

*The American Iron and Steel Institute has written a minority opinion concerning this appendix; see page 193.

2. Addition of new vertical shear connections between the girder webs and the column flanges.

3. Removal of existing clip angles at the top and bottom flanges of the girders.

4. Addition of new moment plates welded at the top and bottom flanges of the girders.

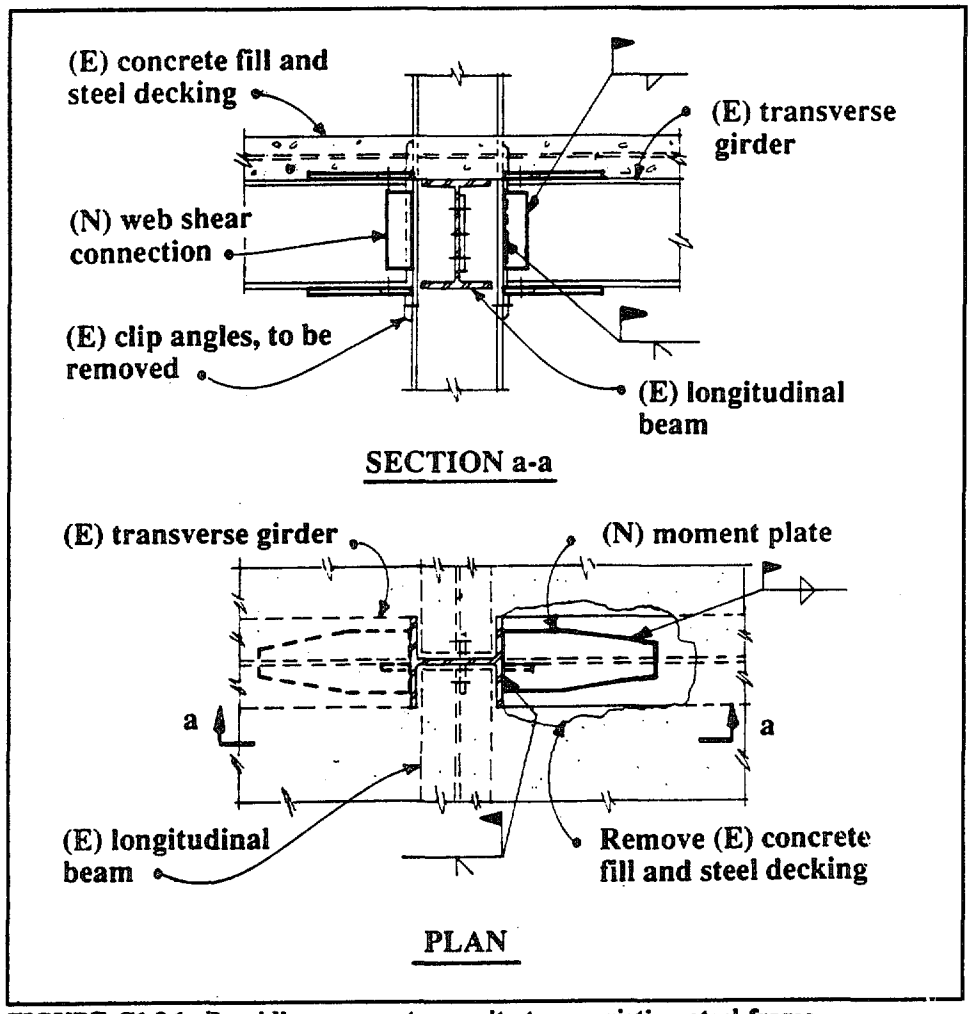

FIGURE C1.3.1 Providing moment capacity to an existing steel frame.

The design of these modifications should provide moment plates that are sized so as to yield prior to inducing yield stress in the columns. The new girder web shear connections should be sized for the gravity load shears (i.e., dead and live load) plus the shears associated with the formation of yield hinges in the moment plates. The column section of the new frame joint must be checked to determine the possible need for horizontal stiffeners opposite the girder flanges. The column web also should be checked to determine the need for doubler plates. Stiffeners probably can be fitted above or below the existing longitudinal beams at the column, but if doubler plates are required, this alternative may not be feasible because of interference with the existing longitudinal beam connection.

C1.3.2 Providing New Diagonal Bracing

Assume that diagonal bracing is to be considered for the longitudinal direction of the building. If the existing diaphragms have adequate capacity, the new bracing can be located in the exterior walls to avoid possible interference with the internal circulation within the building. If the diaphragm has inadequate capacity to transfer

the seismic shears to the exterior longitudinal walls, it probably would be more cost-effective to brace one or more of the interior longitudinal frames rather than to strengthen the diaphragm.

In the design of the vertical bracing, X-bracing will be more effective than diagonal or chevron bracing for most braced bays because the tension diagonal will provide lateral support for the compression diagonal. Many designers assume that the effective length of the compression diagonal for X-bracing may be taken as one-half of the diagonal length for the in-plane direction and two-thirds of the diagonal length for the out-of-plane direction. Since the greater L/r will govern the capacity of the brace, this leads to the use of brace members with different radii of gyration, r, about each axis.

The number of braced bays must be adequate to resist the story shears; however, in this building the story shears are not severe and can easily be resisted with only a fraction of the number of bays available in the exterior longitudinal frames. Next, the existing columns and foundations must be investigated for the overturning loads in the bracing. If it is assumed that all braces are equally loaded, it should be noted that with multiple contiguous bays of X-bracing there are no additional vertical forces in the columns and foundations except at the extreme ends of the braced bays. Therefore, if the existing columns or foundations do not have adequate capacity for the calculated overturning loads in the bracing, the engineer may be able to reduce these loads to acceptable limits by using smaller brace members and increasing the number of braced bays. The required structural modifications (Figure C1.3.2) involve:

1. Removal of the existing concrete fill and steel decking at second floor and roof levels to permit welding of gusset plate to beam flange. Since the gusset is to be welded along the center of the beam flange, only a narrow section of decking needs to be removed. Care must be taken that adequate bearing remains for the decking.

2. Welding of gusset plates to the beam/column joints and to the column/base plate joints.

3. Welding of new diagonal braces to the gusset plates.

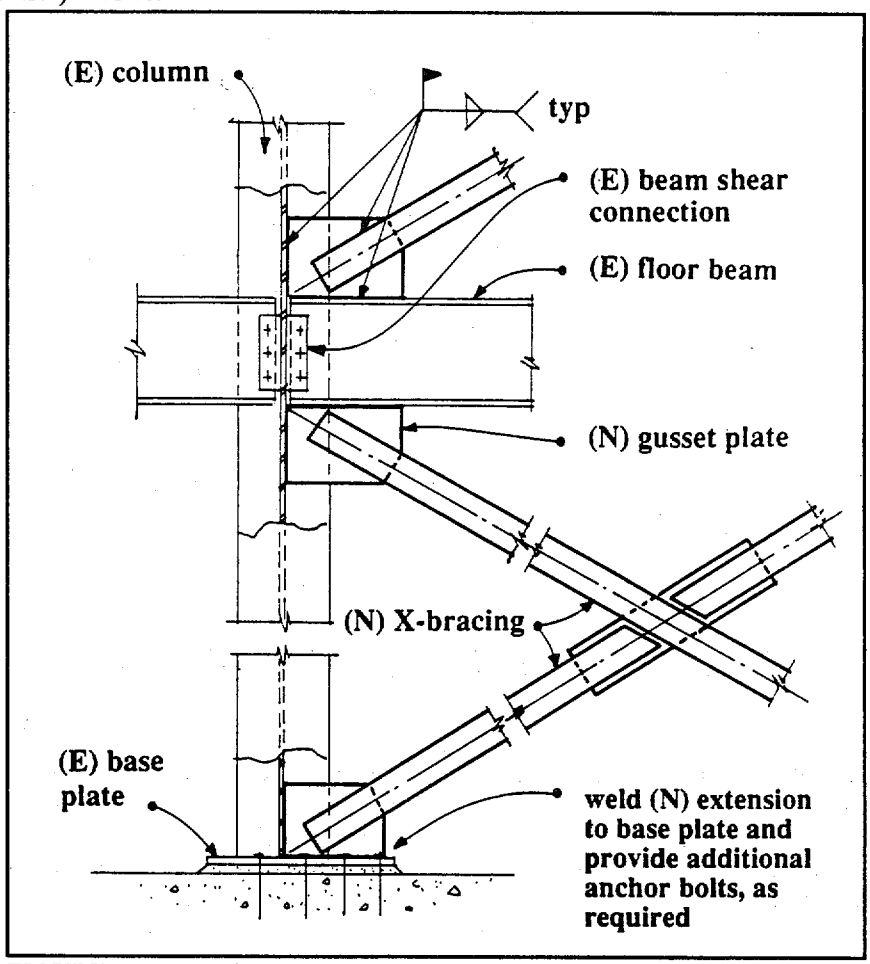

FIGURE C1.3.2 Providing new diagonal bracing to an existing steel frame.

The design of the new bracing system must include a structural investigation of the capacity of the existing columns, beams, and foundations to resist the additional forces associated with the new bracing. It should be noted that the floor beams in the braced frames are required to function as collector members to "collect" the diaphragm shears and distribute them to the braced bays. The beam-to-column connection must therefore be capable of transferring tensile or compressive forces as well as resisting the vertical reaction of the floor beams.

C1.3.3 Providing New Shear Walls

New shear walls of reinforced concrete or reinforced masonry may be provided in lieu of bracing or frame action in either direction of the building. If shear walls are provided, they should be infilled bays on a column line and preferably in a location where window or door openings are not required. With infill walls, the columns can function as boundary members for overturning loads and the beams or girders as collector members for the shear walls. The shear walls probably will require new foundations and also will add significantly to the building mass, which will increase the seismic story shears.

C1.4 RELATIVE MERITS OF THE ALTERNATIVE STRENGTHENING TECHNIQUES

As indicated above, the frame columns have inadequate capacity to resist the seismic story shears in the longitudinal direction; therefore, new vertical bracing or shear walls are the available options. It appears that the bracing could be installed in the exterior longitudinal frames without strengthening the columns or the foundations whereas the shear walls probably would need new foundations and be more disruptive as well as requiring more time for construction.

In the transverse direction, providing moment capacity to the existing frames (Figure C1.3.1) appears to be feasible. It appears that this would be required for about two-thirds of the frames in the transverse direction at the second floor level and only about one-half of the frames at the roof level.

Preliminary design of the structural strengthening concepts should be performed to define the location and extent of the modifications and to size the new structural members. Relative costs for the various alternatives also should be developed and attention should be given to the other considerations described at the beginning of Chapter 3. With this information, the most appropriate seismic strengthening technique for the building can be selected.

C2 UNREINFORCED MASONRY BUILDING EXAMPLE

C2.1 DESCRIPTION OF BUILDING

This building is a two-story structure, 30 ft by 100 ft in plan. The first level has an open front at the east end and a longitudinal bearing wall on the centerline of the building. There are no crosswalls in the first level, but the second level contains apartments with many crosswalls. The roof diaphragm is constructed of diagonal timber sheathing. The floor contains finished wood flooring over timber diagonal sheathing. The existing conditions are shown in Figure C2.1.

C2.2 DEFICIENCIES

The building's deficiencies involve:

1. Torsion--The east end of the building has negligible resistance to lateral loads at the first level and constitutes a severe seismic hazard.

2. Adjacent Building--The adjacent building on the south side is not separated from the south wall and would act as a buttress for the diaphragms of the subject building. This could result in damage to both buildings.

3. Wall Stability--The gabled east and west walls at the second level are too slender (i.e., 9 in.) for the calculated out-of-plane seismic response imparted by the roof diaphragm.

4. Wall Anchorage--There is a serious inadequacy in the anchorage of all walls to the floor and roof diaphragms.

5. In-Plane Shear Strength of Walls--In addition to the obvious deficiency in the open east wall at the first level, there also are potential deficiencies in the remaining east and west walls at both levels.

6. Parapet--The 9-in. unreinforced masonry walls in the second level terminate in an unsupported 18-in. high parapet above the roof level that may be a hazard to life safety in a severe earthquake.

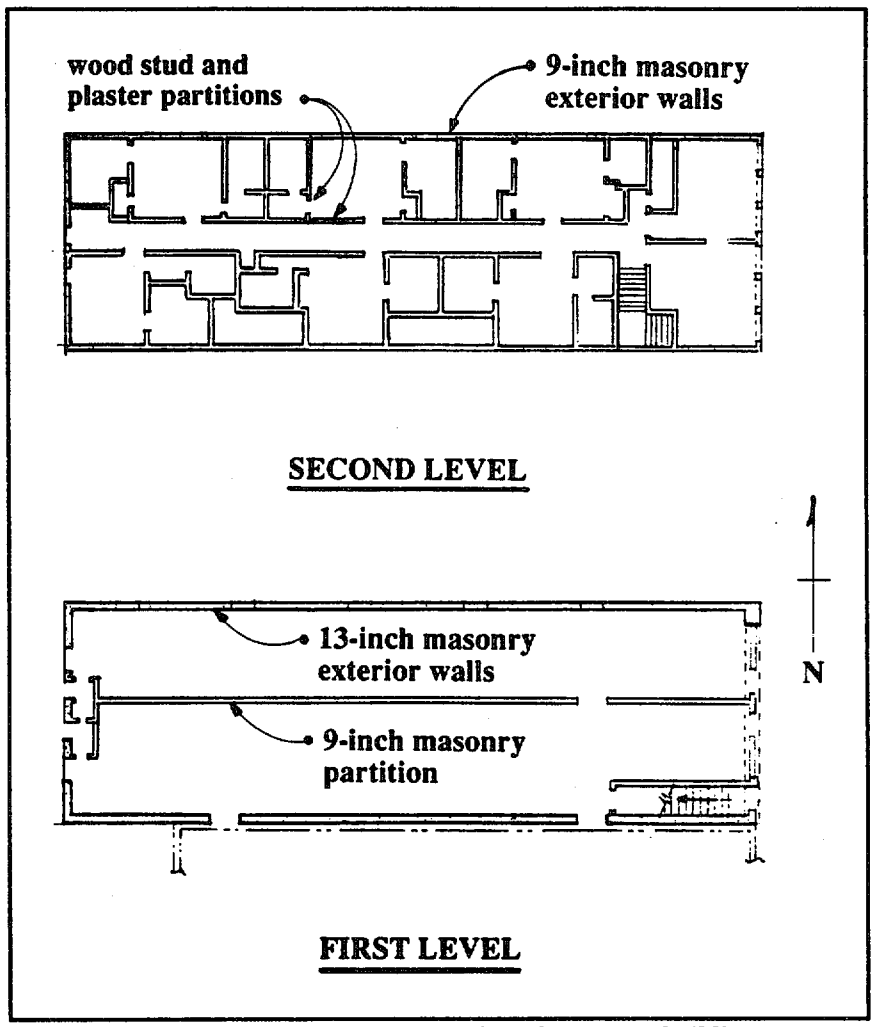

FIGURE C2.1 Existing two-story unreinforced masonry building.

C2.3 STRENGTHENING TECHNIQUES

The structural evaluation of this building was conducted using the ABK Methodology for unreinforced masonry bracing wall buildings with wood diaphragms. The recommended strengthening techniques (Figure C2.3) also follow that methodology.

C2.3.1 Torsion

The east wall of the building is deficient in both strength and stiffness. In addition, extensive wall anchors are required at both the first and second levels. Although the open front condition at the first level could be improved with either a concrete or steel moment frame, the extensive additional work required for this wall and its foundation combine to make replacement an attractive alternative.

Replacement of the existing east wall with a two-story reinforced concrete frame is the recommended strengthening alternative. Since the roof and second floor joists are supported on the longitudinal walls, shoring will not be required as the east wall is removed. Temporary lateral bracing in the north-south direction should be utilized during the replacement of the east wall. The new second level wall would be a metal stud wall with window openings similar to the existing ones and with brick veneer to match the other brick walls, if desired.

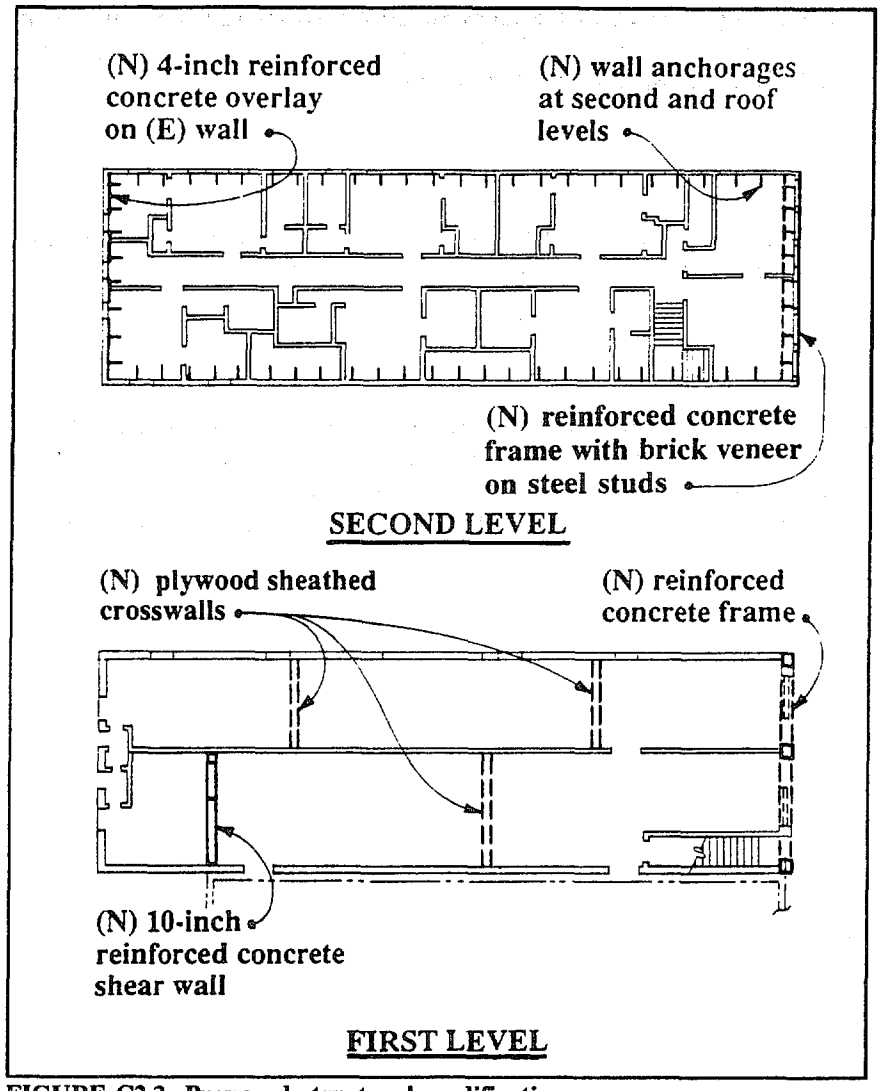

FIGURE C2.3 Proposed structural modifications.

C2.3.2 Adjacent Building

The proposed solution to the problem with the adjacent building is to provide a new reinforced concrete shear wall in the first level of the subject building. The wall would be in line with the west wall of the adjacent building. In addition to the new shear wall, three new timber cross walls will be provided in the first level (Figure C2.3) to reduce the diaphragm deflection. The shear wall, the cross walls, and their connections to the floor diaphragm will be designed in accordance with the ABK Methodology. This strengthening may not completely solve the adjacent building problem, but the new shear wall and the cross walls will significantly reduce the inertia forces transmitted to the adjacent building.

C2.3.3 Wall Stability

The height to thickness ratio, h/t, of an unreinforced masonry wall is used as an index of the stability of the wall for the out-of-plane seismic response induced by the diaphragm. The east wall is to be replaced with a reinforced concrete wall so that the west wall in the second level is the only remaining wall with an excessive h/t ratio. The deficiency can be corrected by providing anchors at the ceiling level and bracing this anchorage up to the wood diaphragm or by designing vertical wall braces that span from the floor to the roof anchorage level.

C2.3.4 Wall Anchorage

All anchorages of masonry walls to diaphragms were found to be inadequate at both levels of the building. Supplementary anchors must be provided for the calculated anchorage. The anchors should be similar to those indicated in Figure 3.7.1.4a or b. Significantly greater allowable loads are permitted for anchors that extend through the masonry wall with a large metal washer on the outside of the wall. This type of anchor should be used in all locations where access is available to the outside face of the wall.

C2.3.5 In-Plane Shear Stress

The new reinforced concrete frame at the east wall, the new shear wall, and the new concrete overlay for the west wall at second level have eliminated the calculated in-plane overstress in the east and west walls.

C2.3.6 Parapet

The unreinforced and unbraced parapet is a life safety hazard because of its h/t ratio. It is recommended that the parapet be reduced in height by the removal of several courses of brick (i.e., 8 to 10 in.). This should be preceded by a horizontal saw cut at a mortar joint on both sides of the wall to avoid damage to the remaining brickwork. The top of the reduced parapet then should be sealed with a mortar cap to prevent intrusions of moisture into the wall.