6.3 ARCHITECTURAL COMPONENTS

6.3.5 PARAPETS AND APPENDAGES

6.3.5.1 UNREINFORCED MASONRY PARAPETS

Unreinforced masonry (URM) parapets, cornices and appendages pose a significant falling hazard and have caused numerous injuries and required costly repairs in past earthquakes. While the function of parapets is "nonstructural," i.e., to prevent fire spread, create a safety railing or conceal roof-mounted equipment, they are a structural concern that requires engineering expertise to address.

TYPICAL CAUSES OF DAMAGE

- Heavy unbraced parapets typically fail out-of-plane at the roofline and may take part of the building wall with it as they fall. Even small pieces of masonry falling several stories may cause serious bodily injury.
- Appendages may crack or spall; connections may be damaged. Pounding between adjacent buildings often results in damage to brittle masonry parapets, cornices, and appendages.
- Failed parapets may fall either inwards or outward. When parapets collapse inward they can damage the roof and have the potential to fall through light roof construction posing a safety hazard to occupants below. If they collapse outward they can fall to the street or onto the roof of an adjacent property.

Damage Examples

Figure 6.3.5.1-1 URM parapet fell and smashed two cars in the 1992 magnitude-7.2 Petrolia Earthquake. A parapet at same location in Ferndale, California failed in 1906 and killed two cows (NGDC, 2009).

Figure 6.3.5.1-2 Unreinforced masonry parapet failures along Beach Street, Watsonville in the 1989 magnitude-6.9 Loma Prieta Earthquake (NGDC, 2009).

Figure 6.3.5.1-3 Damage to roof framing caused by failure of overhanging brick masonry during the 1962 magnitude-5.8 Cache Valley, Utah earthquake (Photo courtesy of PEER Steinbrugge Collection, No. S828).

SEISMIC MITIGATION CONSIDERATIONS

- Some jurisdictions have parapet ordinances requiring seismic bracing for URM parapets along a public right of way; check the local jurisdiction for requirements.
- Parapet and roof conditions may vary widely. An engineered design accounting for specific as-built construction details is needed to provide reliable earthquake performance. Flashing and weatherproofing must be provided for any roof-mounted connections.
- Connection details for terra cotta cornices and appendages are similar to those for anchored veneer. See Section 6.3.1.2 and check the internet for various types of masonry, stone and veneer anchors.

Mitigation Examples

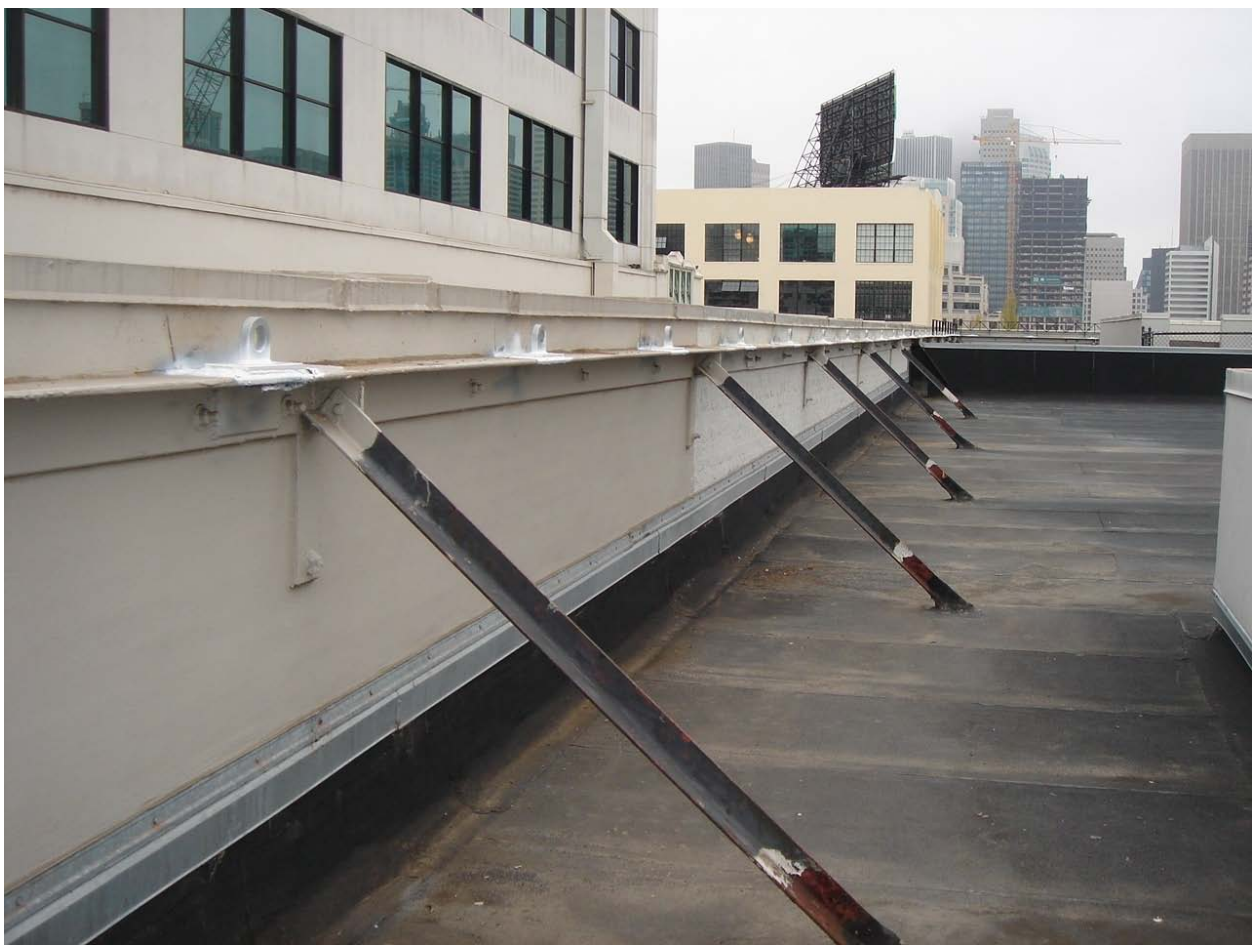

Figure 6.3.5.1-4 Bracing of URM parapet (Photo courtesy of Maryann Phipps, Estructure).

Figure 6.3.5.1-5 Bracing of unreinforced masonry parapet (Photo courtesy of Degenkolb Engineers).

Figure 6.3.5.1-6 Close-up of parapet bracing (Photo courtesy of Degenkolb Engineers).

Mitigation Details

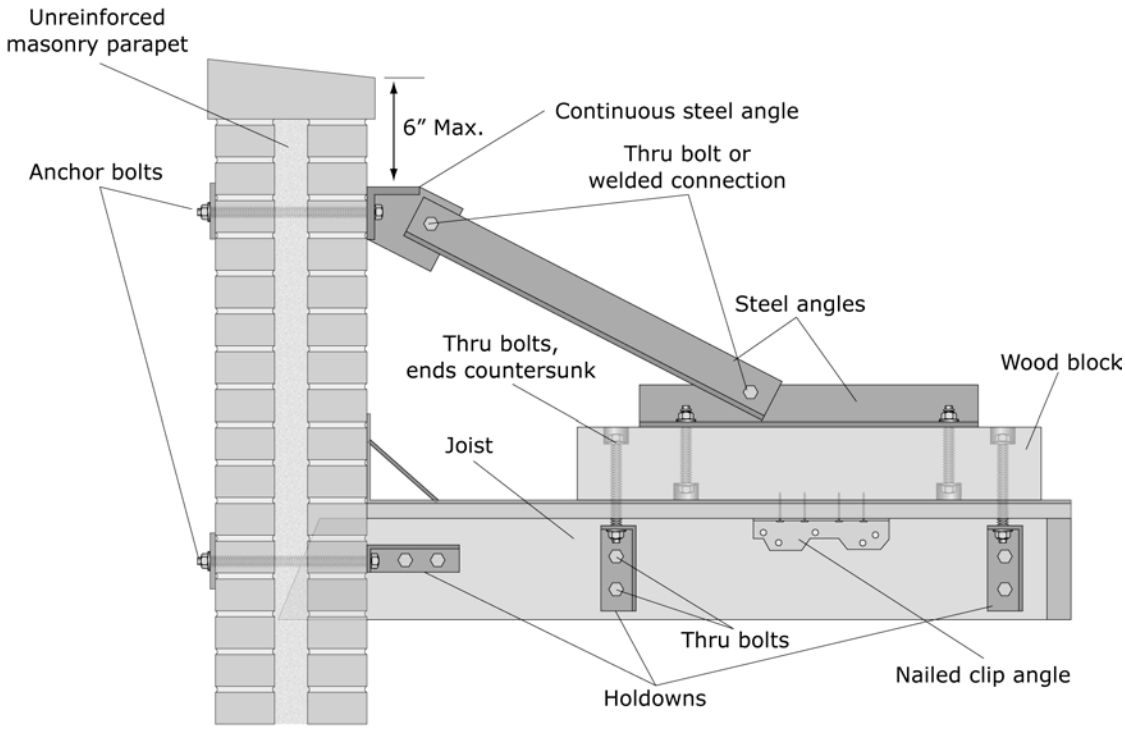

Note: Typical brace configuration shown; parapet and roof conditions may vary widely. Provide appropriate weatherproofing and flashing details.

Figure 6.3.5.1-7 Unreinforced masonry parapet (ER).

6.3 ARCHITECTURAL COMPONENTS

6.3.6 CANOPIES, MARQUEES, AND SIGNS

6.3.6.1 CANOPIES, MARQUEES, AND SIGNS

Cantilevered appendages of any type may pose a significant falling hazard when located above an entrance or along a sidewalk or street.

TYPICAL CAUSES OF DAMAGE

- Unbraced cantilevered items may bounce or swing; connection hardware may be undersized or corroded; items may collapse and fall.

Damage Examples

Figure 6.3.6.1-1 Failure of commercial sign in the 1979 Imperial Valley, California earthquake (Photo courtesy of Robert Reitherman).

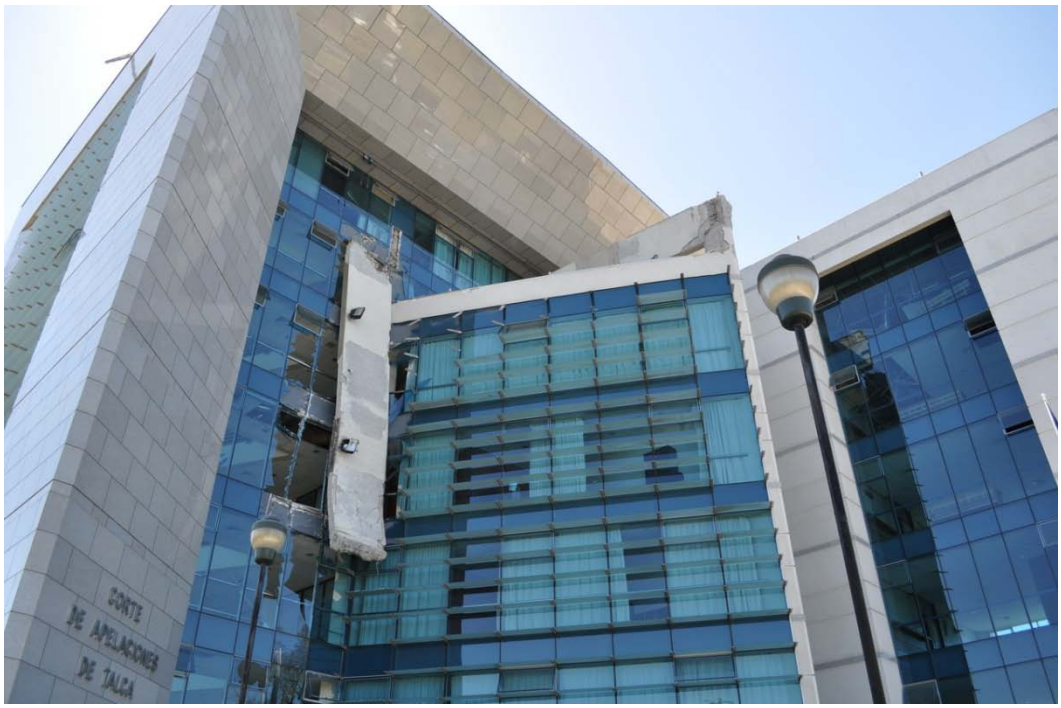

Figure 6.3.6.1-2 Reinforced concrete appendage dangling from connection on one side; impact damaged the curtain wall and created a serious hazard above the entrance of the Corte de Apelaciones de Talca in the 2010 magnitude-8.8 Chile Earthquake (Photo courtesy of Eduardo Fierro, BFP Engineers).

SEISMIC MITIGATION CONSIDERATIONS

- Anchorage detail shown is for a cantilevered canopy, sign, or marquee that is oriented horizontally; the vertical braces protect the item from vertical accelerations and prevent bouncing.
- Seismic protection of building appendages requires a reliable connection from the appendage to structural framing members. Heavy canopies, marquees, or signs may require installation of supplemental framing to deliver seismic demands to primary structural framing elements.

Mitigation Details

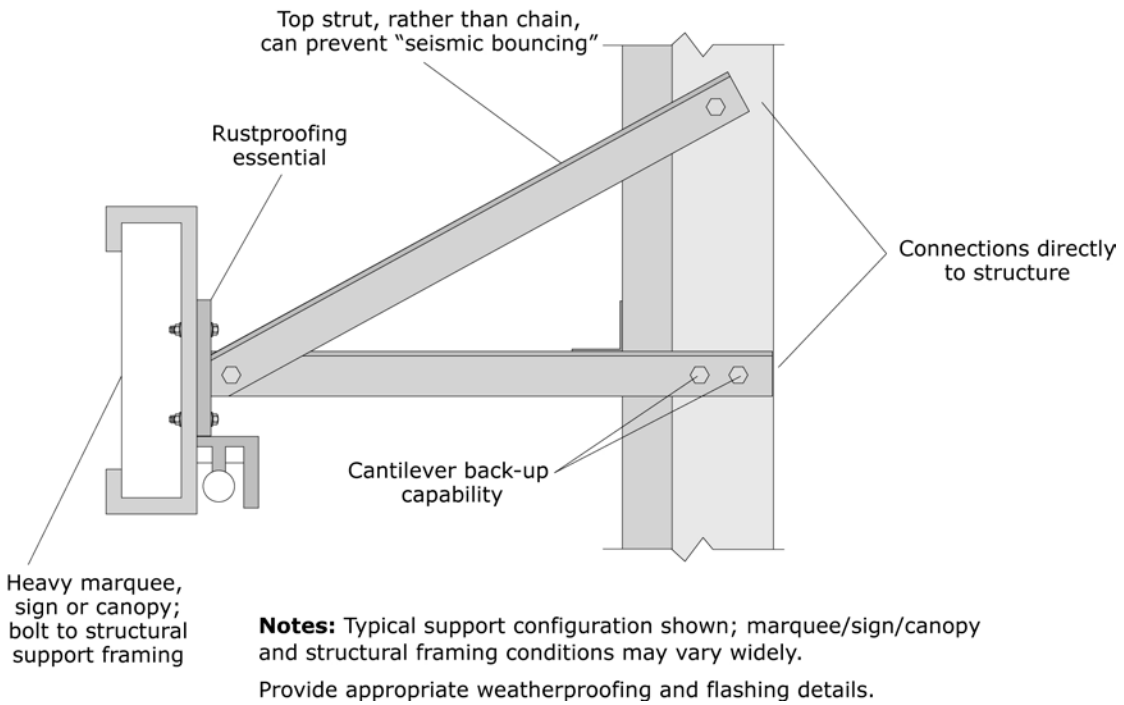

Figure 6.3.6.1-3 Canopy, marquee, or sign support (ER).

6.3 ARCHITECTURAL COMPONENTS

6.3.7 CHIMNEYS AND STACKS

6.3.7.1 UNREINFORCED MASONRY CHIMNEY

Unreinforced masonry (URM) chimneys are extremely vulnerable to earthquake damage; their behavior has long been used as an indicator of seismic intensity as in the Modified Mercalli Intensity (MMI) scale.

TYPICAL CAUSES OF DAMAGE

- Unreinforced masonry chimneys may crack, spall, separate from the structure, or collapse. They may fall through the roof structure and injure occupants or fall to the ground.
- Chimneys may suffer damage even at relatively low levels of ground shaking.

Damage Examples

Figure 6.3.7.1-1 Chimney collapsed and fell through the roof; approximately 2,600 chimneys were destroyed in the 1992 Big Bear City, California earthquake (NGDC, 2009).

Figure 6.3.7.1-2 Residential metal flue in wood frame chimney that failed in the 2003 magnitude-6.5 San Simeon earthquake. The house fell off its cripple wall, pushing over the chimney (Photo courtesy of Michael Mahoney).

Figure 6.3.7.1-3 Chimney collapse (Photo courtesy of Earthquake Engineering Research Institute).

SEISMIC MITIGATION CONSIDERATIONS

- The most reliable mitigation measure is to remove a URM chimney and replace it with a metal flue inside a framed enclosure or to remove the chimney and firebox entirely.
- If the chimney is not being used, reducing its height to not more than 1 to 2 feet above the roofline will limit the potential for damage.
- Chimney and roof configurations vary widely. If a URM chimney is to be braced in place, an engineered design is needed to account for specific as-built construction details.
- To protect against a chimney falling in toward the roof and posing a safety hazard below, the roof can be locally strengthened with plywood.
- Large historically important chimneys need special consideration; these could be reinforced using a "center core" technology to improve their performance; this method involves core drilling the masonry and filling the cores with reinforcing and grout.
- Fire code requirements and local ordinances must be considered when considering strategies for reducing the risk of unreinforced masonry chimneys.
- The City of Seattle developed guidelines for *Alteration and Repair of Unreinforced Masonry Chimneys* following the 2001 Nisqually Earthquake; these can be found at http://www.seattle.gov/dclu/codes/dr/DR2004-5.pdf and include details for straps at the roof and floor lines, bracing above the roofline, and partial replacement above the roofline. Similarly, the Los Angeles Department of Building and Safety developed prescriptive measures for *Reconstruction and Replacement of Earthquake Damaged Masonry Chimneys*, available at http://ladbs.org/LADBSWeb/LADBS_Forms/InformationBulletins/IB-P-BC2008-070EQDamagedChimney.pdf.

Mitigation Examples

Figure 6.3.7.1-4 Braced chimney (FEMA, 2004).

Mitigation Details

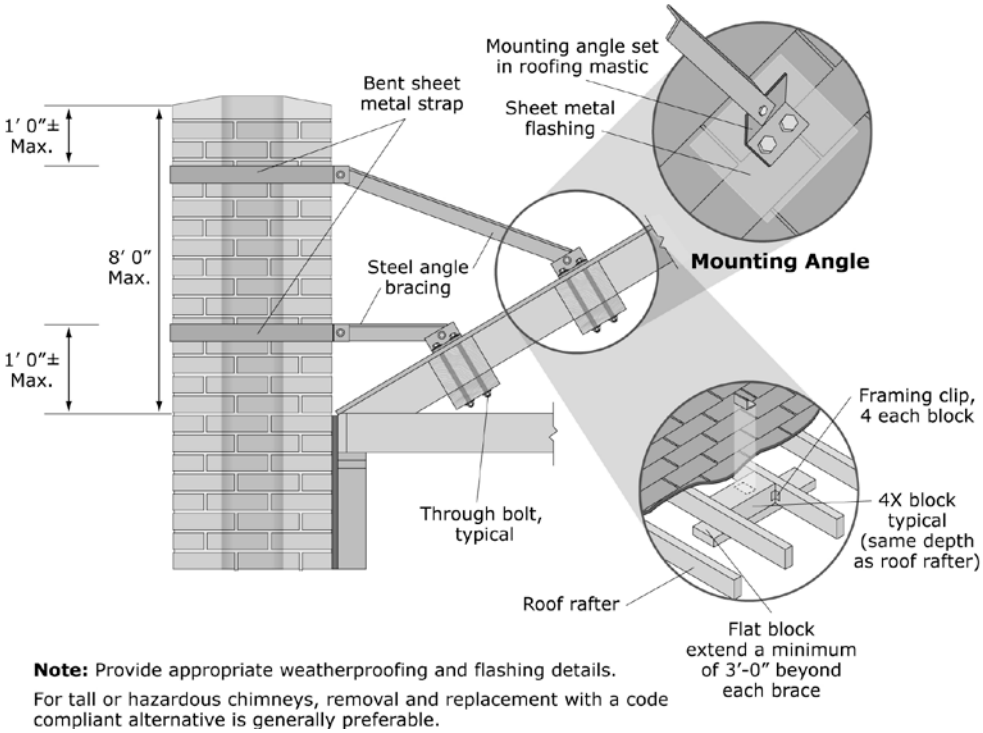

Figure 6.3.7.1-5 Unreinforced masonry chimney bracing (ER).

6.3 ARCHITECTURAL COMPONENTS

6.3.8 STAIRWAYS

6.3.8.1 STAIRWAYS

This includes stairs between floors, which may be independent of the structure, or integral with it. Stairs are needed for exiting following an earthquake and hence protecting them from damage and keeping them clear should be a high priority. Protecting a stair from damage is a structural concern that requires engineering expertise to address.

TYPICAL CAUSES OF DAMAGE

- Stairs are primarily damaged by interstory drift, i.e., differential movement of the adjacent floors, which forces a stairway to try to act like a diagonal brace. Stair damage is more likely to occur in flexible buildings with larger inter-story drift and less likely to occur in stiffer buildings.
- The walls surrounding a stairway may be damaged during an earthquake causing debris to fall into the stairwell and rendering the stairs unusable. Brittle materials such as brick, hollow clay tile, or glass are particularly vulnerable and may create falling and debris hazards in stair enclosures.

Damage Examples

Figure 6.3.8.1-1 Damaged stairway in the 1994 magnitude-6.7 Northridge, California earthquake (Photo courtesy of Wiss, Jenney, Elstner Associates).

Figure 6.3.8.1-2 Stair damaged beyond repair in the 2001 magnitude-8.4 Peru Earthquake; concrete demolished prior to photo (Photo courtesy of Eduardo Fierro, BFP Engineers).

Figure 6.3.8.1-3 View of stairway in the Banco Central Building, Managua, Nicaragua after the 1972 magnitude-6.2 Managua Earthquake. Most of the stairs were covered with debris that resulted from the failure of the hollow tile partitions surrounding the stairs. This photograph highlights the need to not only prevent direct damage to stairway framing and connections, but also to protect against damage to surrounding walls (Photo courtesy of PEER Godden Collection, No. J94).

Figure 6.3.8.1-4 Concrete stair dangling from landing above in the 2010 magnitude-7 Haiti Earthquake (Photo courtesy of Eduardo Fierro, BFP Engineers).

Figure 6.3.8.1-5 Stairs damaged up the full height of this apartment building in Viña del Mar in the 2010 magnitude-8.8 Chile Earthquake (Photo courtesy of Santiago Pujol, Purdue University). The stairs were rigidly attached at adjacent floors and behaved like diagonal braces although they were neither designed nor detailed to function as structural braces.

SEISMIC MITIGATION CONSIDERATIONS

- ASCE 7-10, *Minimum Design Loads for Buildings and Other Structures* (ASCE, 2010), Section 13.1.3.1 now requires that egress stairways required to function for life-safety purposes after an earthquake be assigned a component importance factor, I_p, of 1.5 and be treated as designed seismic systems. This may include egress stairways that are not part of the building structure. Structural calculations, special details and additional inspection may be required.
- In order to prevent stairs from behaving like diagonal struts between adjacent floors, the stairs should be detailed with a fixed connection at one floor and a sliding connection at the other that allows movement parallel to the direction of the stair.
- Sliding "gang plank" connections or connections with slotted holes can be used to isolate the stair from one of the attached floors and prevent damage due to inter-story drift. The connection must be designed to accommodate the anticipated drift.
- If stair enclosures are built using brittle materials such as unreinforced masonry, hollow clay tile, glass block, or skylights, it is recommended that they be encapsulated or replaced to prevent falling hazards and debris in the stairwell. Provide bracing and anchorage for pipes, lighting, emergency lighting or ducts to prevent falling hazards and debris in the stairwell. Maintaining safe exits is a critical element of earthquake safety.

Mitigation Details

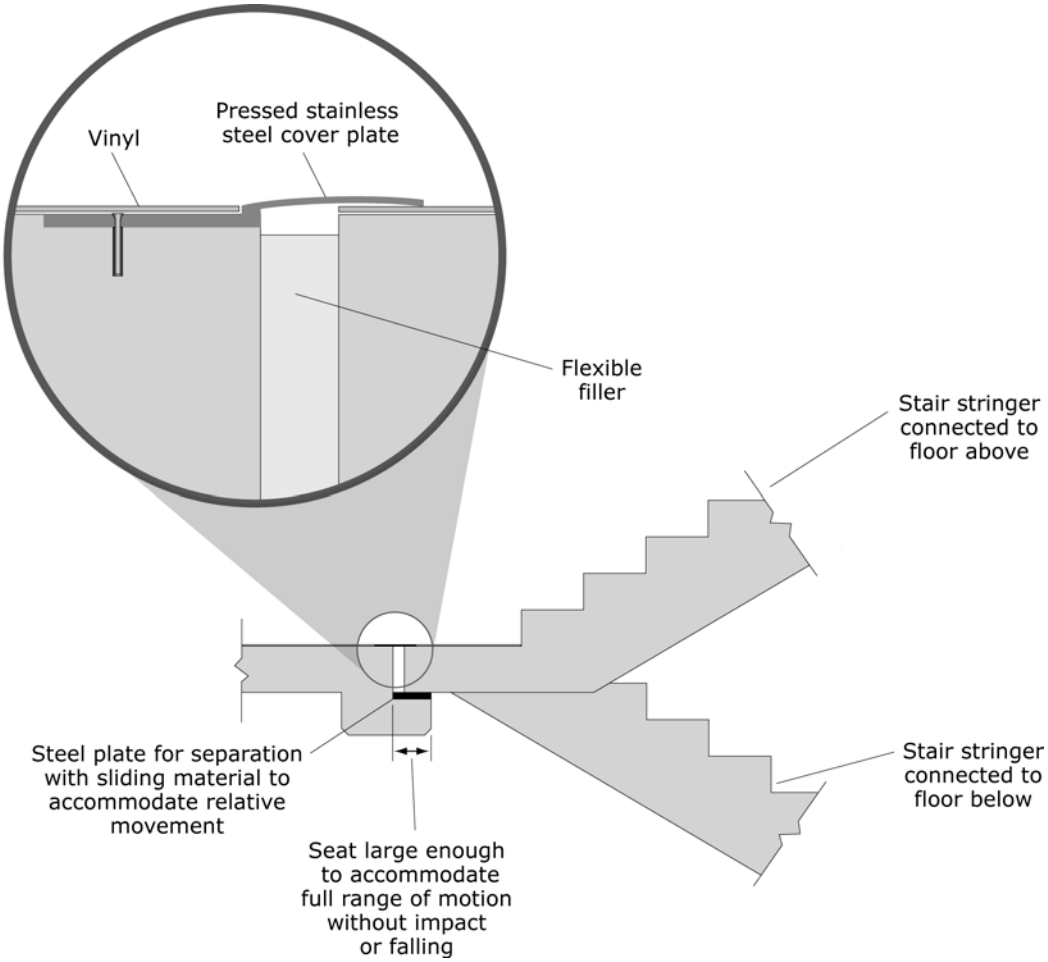

Figure 6.3.8.1-6 Stairway with landing (ER).

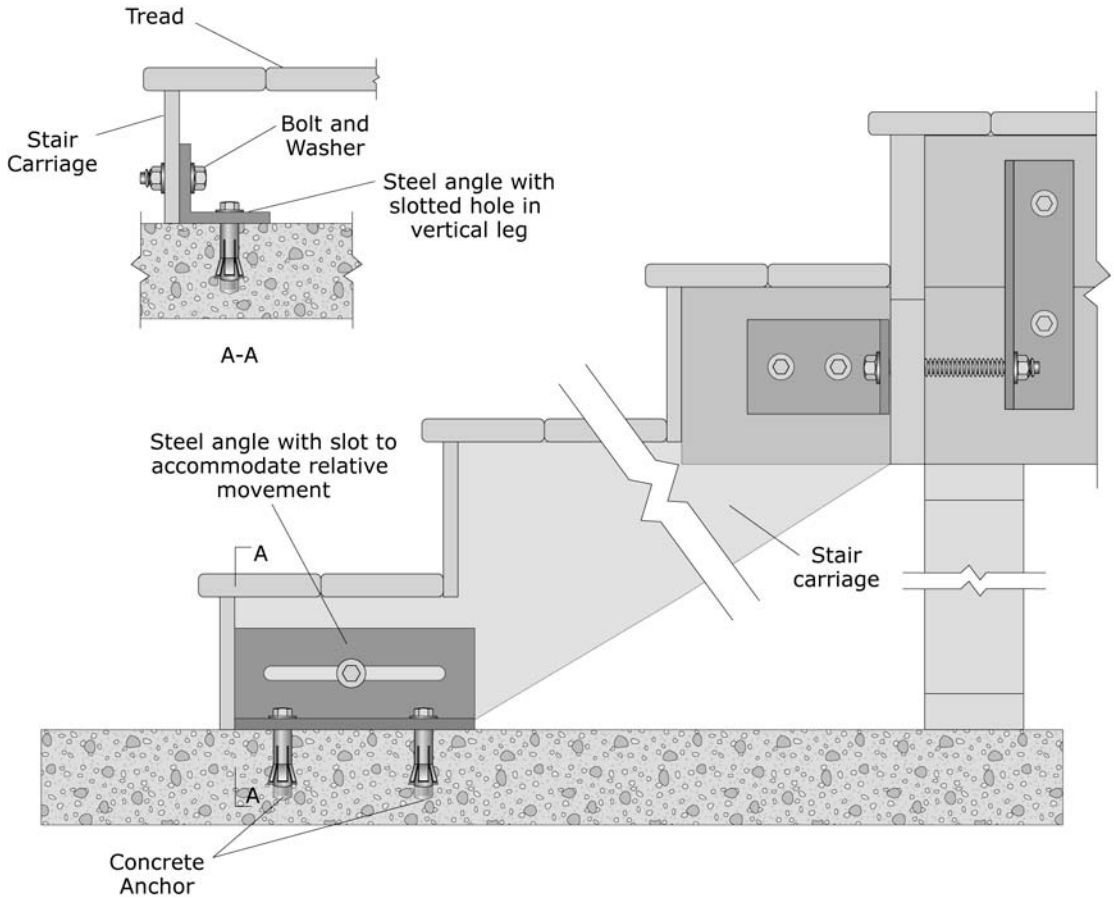

Figure 6.3.8.1-7 Stairway with landing with single run between floors (ER).

6.3 ARCHITECTURAL COMPONENTS

6.3.9 FREESTANDING WALLS OR FENCES

6.3.9.1 FREESTANDING MASONRY WALL OR FENCE

This category covers freestanding (cantilevered) walls and fences built of either reinforced or unreinforced masonry. Freestanding fences of 6 feet or less are often not covered by code provisions; nevertheless, unreinforced or poorly reinforced masonry walls or fences or those with inadequate foundations are vulnerable to earthquake damage.

TYPICAL CAUSES OF DAMAGE

- Unreinforced masonry elements perform poorly in earthquakes; unreinforced or under-reinforced masonry walls and fences frequently fail out-of-plane and may collapse completely. Walls with inadequate foundations may also fail out-of-plane and tip over.
- Falling masonry walls and fences may injure people and property and block pedestrian walkways, driveways, loading docks, streets and access for emergency vehicles during an emergency.
- When these fences serve as a security perimeter, their failure may result in a security breach following an earthquake resulting in additional property damage due to trespassing or looting.
- The 1994 Northridge Earthquake damaged many miles of poorly constructed concrete masonry unit (CMU) fences and caused collapse of walls with inadequate or absent reinforcing and foundations in Northridge and Sylmar, California, covering sidewalks with debris, as shown in Figure 6.3.9.1-1. After the 2010 Haiti Earthquake, the debris were apparent from aerial photos of the affected areas.

Damage Examples

Figure 6.3.9.1-1 Collapse of freestanding CMU walls covering much of the sidewalk in the 1994 magnitude-6.7 Northridge Earthquake (Photo courtesy of Robert Reitherman). The rubble reveals that the wall was unreinforced.

Figure 6.3.9.1-2 Freestanding masonry fences with inadequate reinforcement collapsed covering both sides of this street in Port-au-Prince in the 2010 magnitude-7 Haiti Earthquake (Photo courtesy of Yves Montoban). Many miles of such fencing collapsed in the 2010 Haiti Earthquake.

Figure 6.3.9.1-3 Damage to reinforced masonry boundary fence at industrial facility in Southern Peru; out-of-plane movement at construction joint in wall without sufficient reinforcing for the level of shaking experienced at this location in the 2001magnitude-8.4 Peru Earthquake (Photo courtesy of Eduardo Fierro, BFP Engineers). Additional boundary steel or reinforced concrete boundary columns located either side of construction joints would improve the performance of this type of fence.

Figure 6.3.9.1-4 Photo at top shows complete collapse of poorly detailed confined masonry fence in foreground; partial collapse of poorly detailed confined masonry fence in distance at left; no damage to well detailed confined masonry fence in distance at right in the 2010 Haiti Earthquake. Close-up view of well-detailed confined masonry fence in bottom photo with concrete columns and bond beam at top (Photos courtesy of Eduardo Fierro, BFP Engineers). Fences in foreground and at right formed the security perimeter at an electric power plant in Port-au-Prince.

SEISMIC MITIGATION CONSIDERATIONS

- Freestanding walls or fences built of concrete masonry units (CMU), brick or stone need to be engineered and constructed to cantilever from the base with appropriate

foundations, adequate reinforcing, good quality mortar, and good workmanship. Seismic loading at the base of tall cantilever walls can be substantial in a major earthquake. Such walls could be constructed using standard seismic detailing for reinforced masonry such as the details shown in Figure 6.3.9.1-6 and 7. Engineered reinforced concrete walls would clearly be another, although more costly, alternative.

- The State of California has published several guidelines that relate to the construction of such fences; see DSA IR 21-1 *Masonry Wall – Non Structural*, DSA IR 21-2 *Concrete Masonry High Lift Grouting Method*, DSA IR 21-3 *Clay Brick Masonry High Lift Grouting Method*, and DSA IR 21-4 *Masonry: Concrete Masonry Unit Standards* (California Department of General Services, 2007a, 2009b, 1999, and 2007b). DSA IR 21-1 describes minimum requirements for a garden wall or screen wall to be used at California schools or essential facilities. Other jurisdictions may have standard details for highway sound walls or short retaining walls that could be adapted for use. Some jurisdictions or homeowner associations may also have zoning restrictions or similar that limit the height, setbacks, or materials used for fencing; check the local jurisdiction. The details shown in Figure 6.3.9.1-5 were adapted from details provided online by the City of San Diego, California for reinforced CMU fences up to 6 feet in height.
- While design and construction of unreinforced masonry walls or fences typically do not come under the purview of the building code, there are many hazardous masonry walls or fences in existence. These could be demolished and replaced with a reinforced masonry fence, wood fence, or cyclone fence. As an alternative, the performance of unreinforced masonry walls with adequate foundations could be substantially improved by using retrofit details for confined masonry. Even though the use of confined masonry is rare in the U.S., it is common in other parts of the world. This system utilizes reinforced concrete boundary members on all four sides of each unreinforced masonry wall panel with a panel size limited to roughly 3 meters in length. The Confined Masonry Network (http://www.confinedmasonry.org/) provides information and details on this subject.
- The International Building Code exempts fences from a building permit if the fence is not over 6 feet in height. The code also states that work must still comply with building code requirements even when a permit is not required.
- Fence heights may also be regulated by the zoning laws of the city. For specific information about the zoning regulations for your fence on your lot, contact the development services and zoning departments for requirements.

MITIGATION DETAILS

1. ALL MATERIAL AND WORKMANSHIP SHALL CONFORM TO THE REQUIREMENTS OF THE AUTHORITY HAVING JURISDICTION.

2. CONCRETE SHALL ATTAIN A COMPRESSIVE STRENGTH OF 2,500PSI MINIMUM AT 28 DAYS.

3. CONCRETE BLOCK UNITS SHALL BE MEDIUM OR NORMAL WEIGHT UNITS CONFORMING TO ASTM C90 (LATEST REVISION).

4. MORTAR SHALL BE TYPE S CONFORMING TO ASTM C270 WITH A COMPRESSIVE STRENGTH OF 1,800PSI MINIMUM AT 28 DAYS.

5. GROUT SHALL CONFORM TO ASTM C476 AND BE COMPOSED OF THE FOLLOWING RATIO BY VOLUME: 1 PART PORTLAND CEMENT, 3-PARTS SAND, 2-PARTS PEA GRAVEL, AND SUFFICIENT WATER FOR POURING WITHOUT SEGREGATION OF GROUT CONSTITUENTS (MIN. COMPRESSIVE STRENGTH OF 2,000PSI AT 28 DAYS).

6. ALL REINFORCING STEEL SHALL COMPLY WITH ASTM A615, GRADE 60. VERTICAL STEEL SHALL BE CENTERED IN THE CONCRETE BLOCK CELL IN WHICH IT IS LOCATED, U.O.N.

7. WALL JOINT REINFORCING STEEL SHALL BE DUR-O-WAL WIRE CONFORMING TO ASTM A82 AND ASTM A641 – STANDARD, MILL GALVANIZED MINIMUM LAP SPLICE OF JOINT REINFORCEMENT SHALL BE 12 INCHES.

8. CELLS CONTAINING REINFORCING STEEL SHALL BE SOLID GROUTED.

9. ALL HORIZONTAL WALL REINFORCING BARS SHALL BE PLACED IN BOND BEAM UNITS. ALL JOINT REINFORCING SHALL BE PLACED IN THE MORTARED BED JOINT.

10. ALL GROUT SHALL BE CONSOLIDATED BY VIBRATING IMMEDIATELY. RECONSOLIDATE GROUT AFTER INITIAL WATER LOSS BUT BEFORE PLASTICITY IS LOST TO INSURE ADEQUATE CONSOLIDATION.

11. CONCRETE BLOCK UNITS ARE TO BE STAGGERED (COMMON BOND) AND ARE TO HAVE THE VERTICAL CONTINUITY OF THE CELLS UNOBSTRUCTED.

12. ALL FOOTINGS MUST EXTEND INTO FIRM UNDISTURBED NATURAL SOIL OR SOIL WHICH HAS BEEN COMPACTED TO AT LEAST 90 PERCENT MAXIMUM DENSITY.

13. THESE WALLS SHALL NOT BE CONSTRUCTED ON EXPANSIVE SOIL (EXPANSION INDEX GREATER THAN 20), LIQUEFIABLE SOILS OR OTHER QUESTIONABLE SOILS, UNLESS THE SOIL HAS BEEN SPECIALLY PREPARED IN ACCORDANCE WITH RECOMMENDATIONS OF A CIVIL OR GEOTECHNICAL ENGINEER.

14. PROVIDE VERTICAL CONTROL JOINTS AT 25'-0" ON CENTER MAXIMUM.

15. FENCE WALL DESIGN INCLUDES ½" OF PLASTER (OR VENEER) ON EACH SID OF THE WALL. NO FINISHES WITH A TOTAL WEIGHT GREATER THAN 13PSF (SUMMATION OF BOTH SIDES OF WALL) ARE ALLOWED.

Figure 6.3.9.1-5 6ft maximum height concrete masonry unit (CMU) wall (PR) [1 of 2].

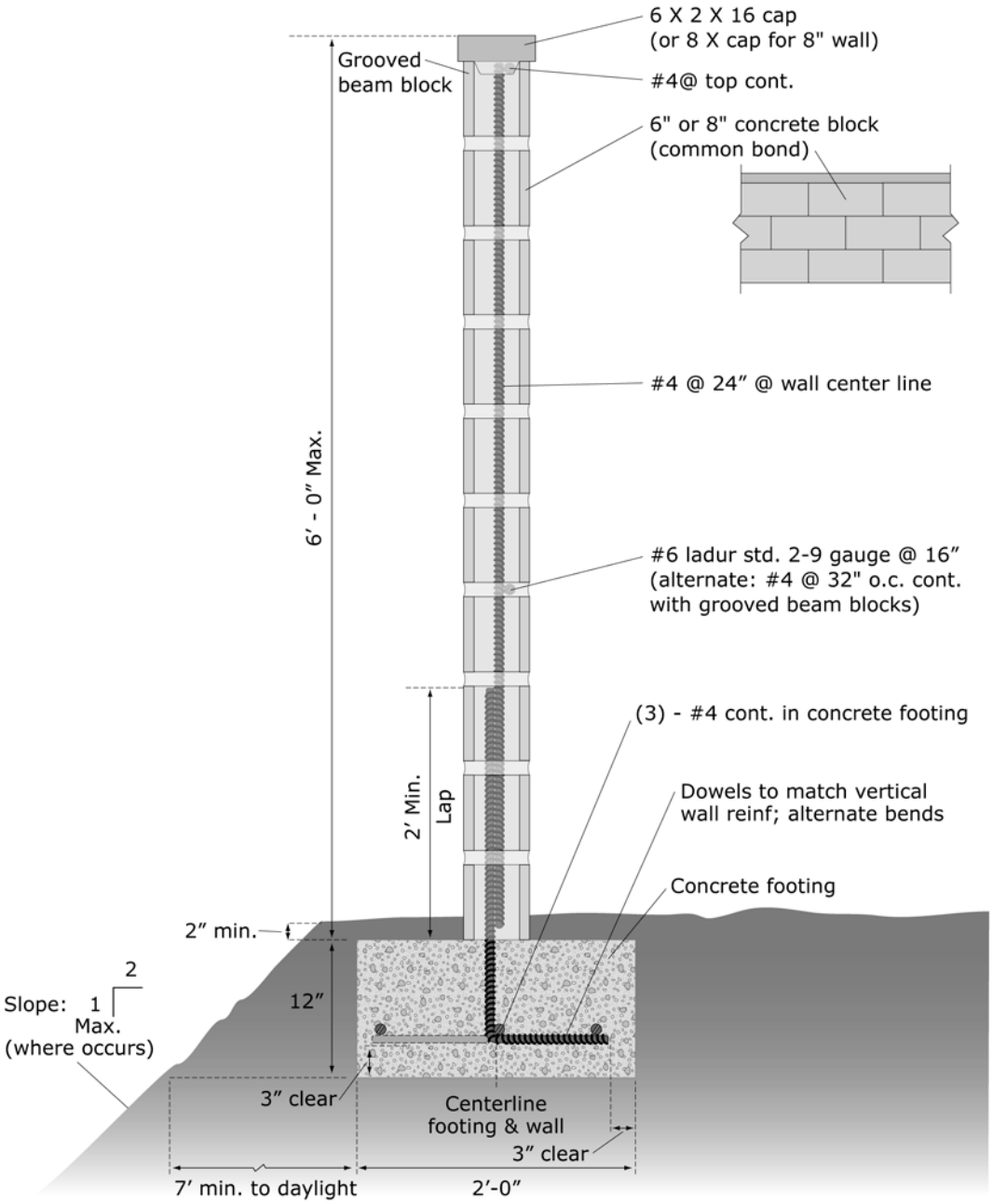

Design Criteria
1. Allowable soil bearing pressure = 1500 PSF
2. Allowable lateral bearing pressure = 100 PSF
3. Seismic load based on site class D w/ mapped spectral acceleration, S_S = 2.03
4. Wind load based on 85 MPH basic wind speed, Exposure Category C
5. See Sheet 1 of 2 for construction specs

Figure 6.3.9.1-5 6ft maximum height concrete masonry unit (CMU) wall (PR) [2 of 2].

6.4 MECHANICAL, ELECTRICAL, AND PLUMBING COMPONENTS

6.4.1 MECHANICAL EQUIPMENT

6.4.1.1 BOILERS, FURNACES, PUMPS, AND CHILLERS

This category includes equipment such as boilers, furnaces, humidifiers, pumps, chillers and similar that are anchored to a concrete floor or housekeeping pad. These items are either rigidly anchored or have vibration isolation. Current codes require anchorage for all equipment weighing over 400 pounds, equipment weighing over 100 pounds that are subject to overturning, and items weighing over 20 pounds that are mounted over 4 feet above the floor.

TYPICAL CAUSES OF DAMAGE

- The primary concern is that equipment may slide, tilt or overturn. Heavy equipment may be anchored to an unanchored or poorly reinforced housekeeping pad and the pad may shift or break.
- Movement of equipment may cause loss of connections to fuel and exhaust lines, relief valves, electrical lines, piping, or ductwork. Fluids such as fuel or refrigerant may leak.
- Function and operability of equipment may be compromised; this is especially critical for hospitals and other essential facilities that must maintain post-earthquake operations.

Damage Examples

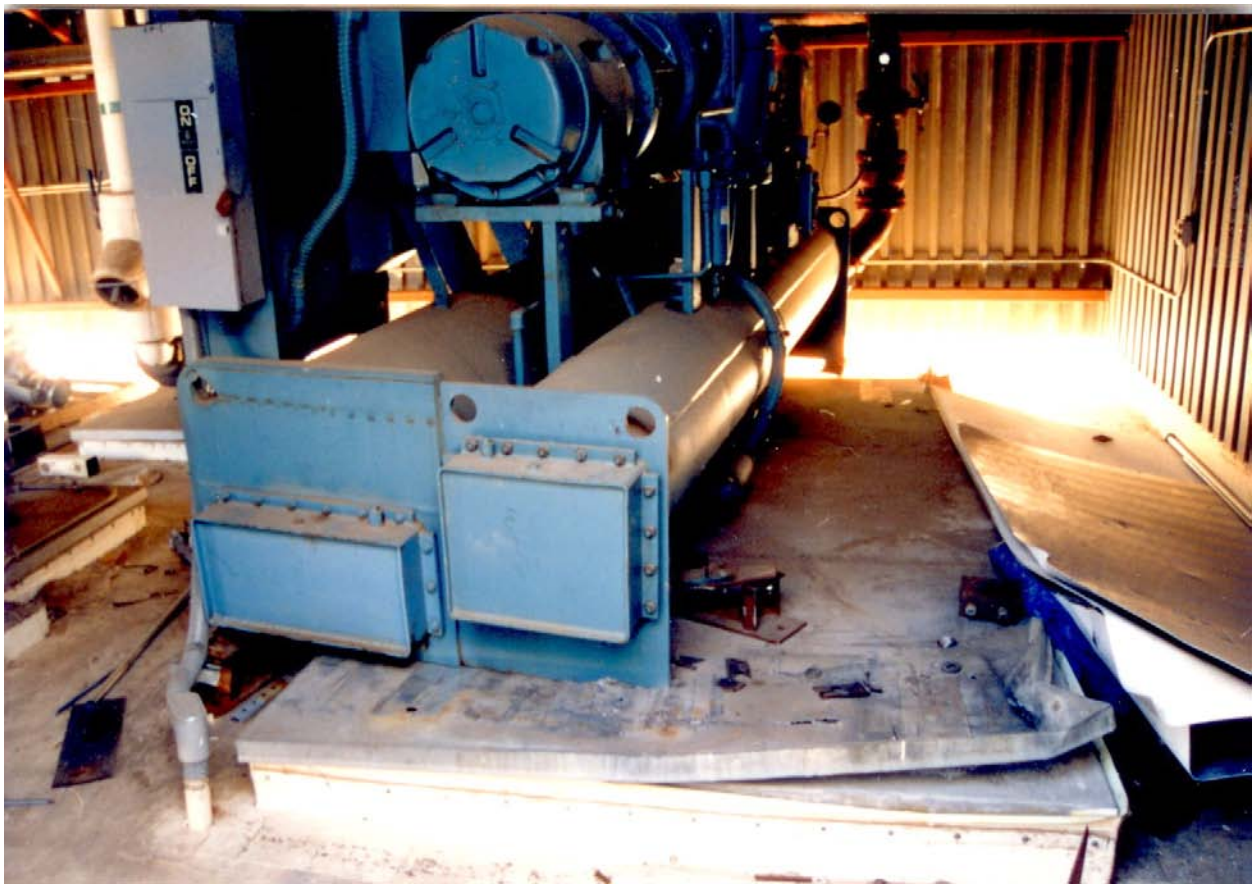

Figure 6.4.1.1-1 Failed chiller mounts due to insufficient uplift resistance in the 1994 magnitude-6.7 Northridge Earthquake ((Photo courtesy of Wiss, Jenney, Elstner Associates).

Figure 6.4.1.1-2 Pumps with rigid anchorage to housekeeping pad in the 2010 magnitude-8.8 Chile Earthquake; housekeeping pad not anchored to base slab and slid horizontally several inches (Photo courtesy of Eduardo Fierro, BFP Engineers).

SEISMIC MITIGATION CONSIDERATIONS

- The details shown depict rigid anchorage of mechanical equipment to a concrete slab or housekeeping pad. Verify that the slab and/or housekeeping pad are adequate to resist the imposed loads. Rigidly mounted equipment should have flexible connections for the fuel lines and piping.
- For equipment with vibration isolation, restraints ("snubbers") are required; see Section 6.4.1.3 for equipment with vibration isolation. These snubbers should not be rigidly connected to the equipment, but instead allow for a small amount of ordinary vibration movement while preventing large seismic movements.
- HVAC equipment or other items required for use in a hospital or essential facility would be classified as designated seismic systems and may require engineering calculations, equipment certification and special inspections. Check with the jurisdiction for specific requirements.
- To see additional examples for specific equipment and different anchorage conditions, refer to FEMA 412 *Installing Seismic Restraints for Mechanical Equipment* (2002) and FEMA 414 *Incremental Seismic Restraints for Duct and Pipe* (2004).

Mitigation Examples

Figure 6.4.1.1-3 Added lateral capacity provided for skid-mounted equipment added following the 2001 Peru Earthquake (Photo courtesy of Eduardo Fierro, BFP Engineers).

Figure 6.4.1.1-4 Bolted connection to steel skid with added shear lugs (Photo courtesy of Eduardo Fierro, BFP Engineers).

Figure 6.4.1.1-5 Alternate detail for skid mounted equipment (Photo courtesy of Eduardo Fierro, BFP Engineers).

Mitigation Details

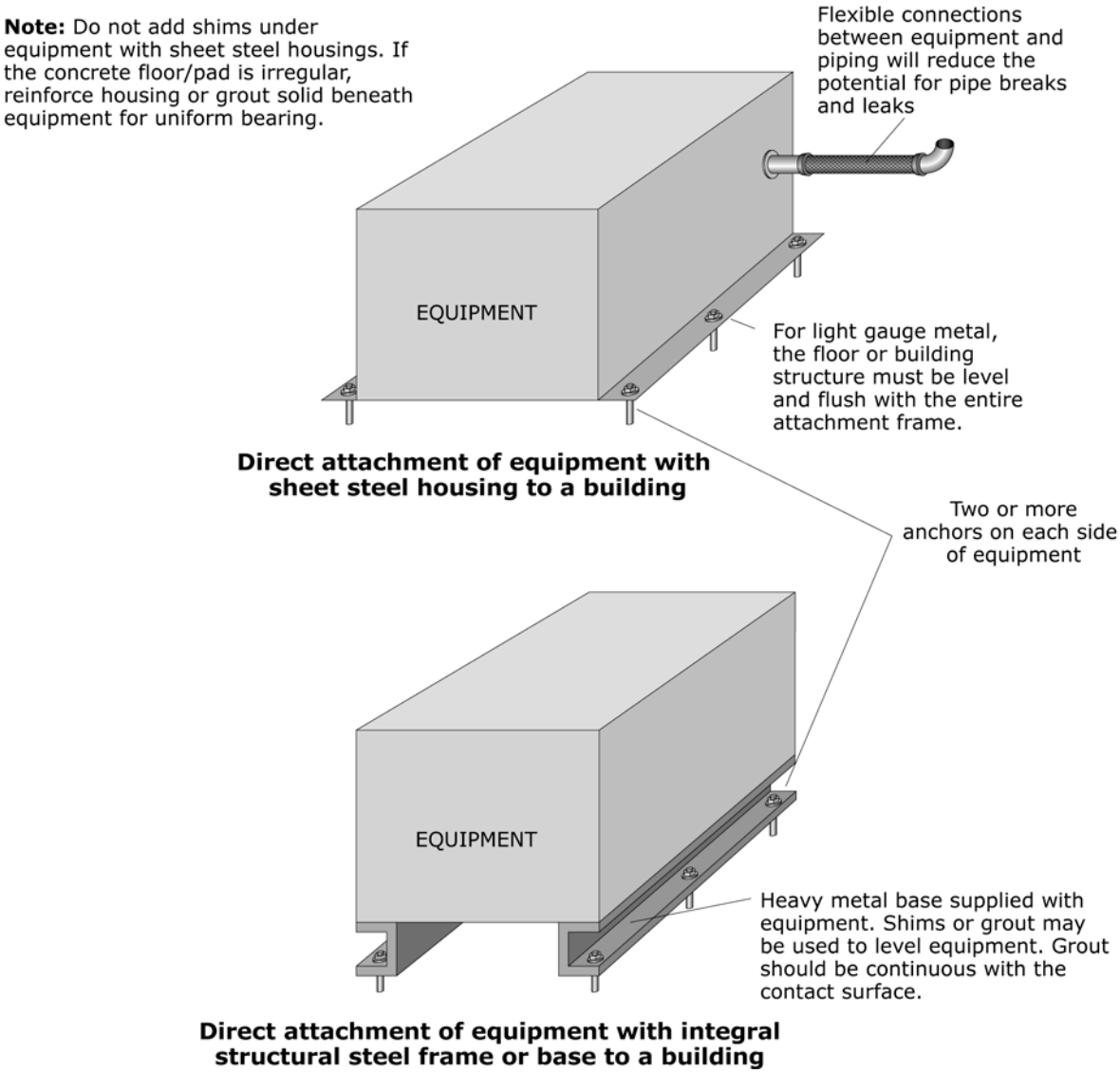

Figure 6.4.1.1-6 Floor-mounted equipment - integral base (ER).

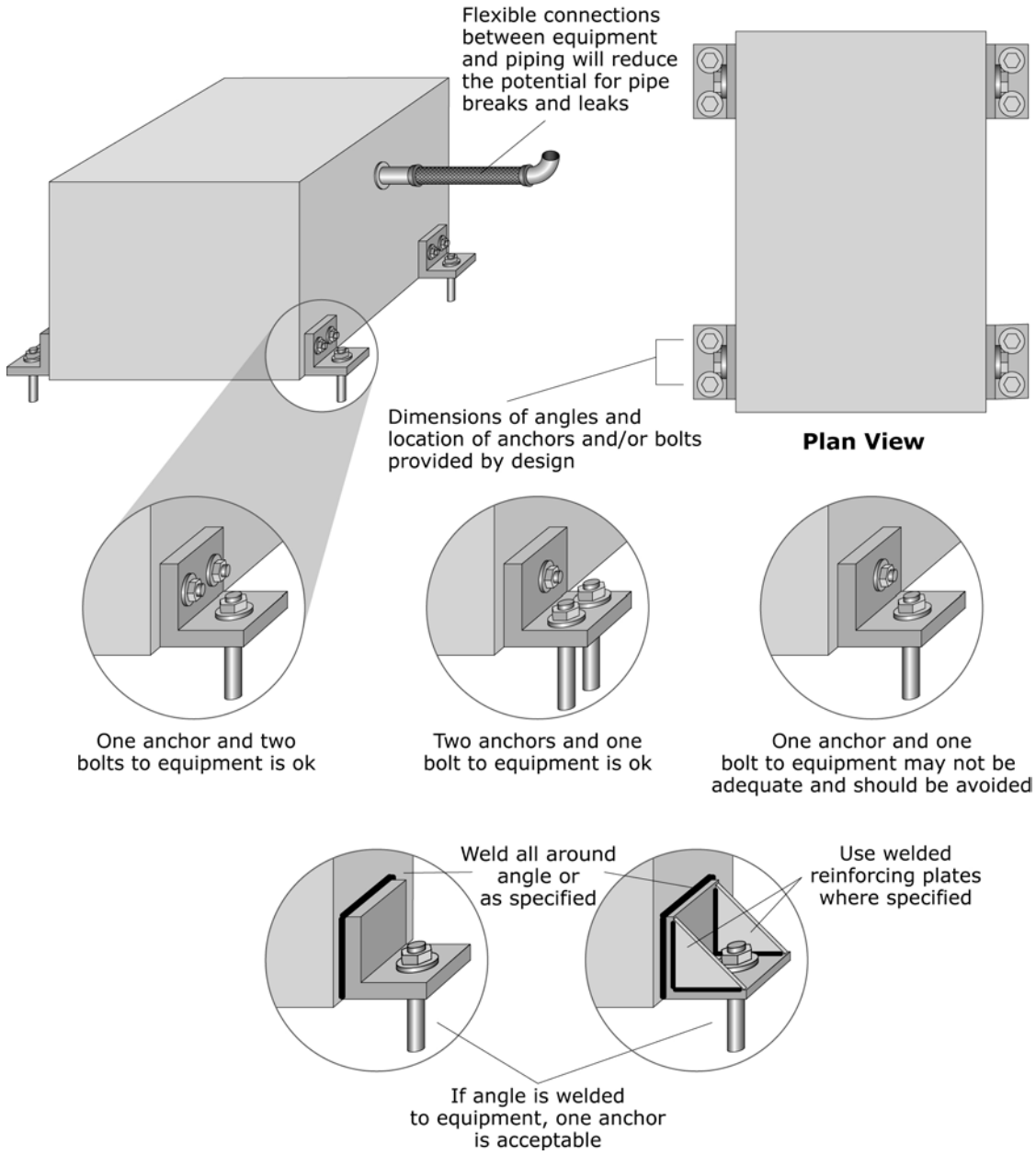

Figure 6.4.1.1-7 Floor-mounted equipment - added angles (ER).

6.4 MECHANICAL, ELECTRICAL, AND PLUMBING COMPONENTS

6.4.1 MECHANICAL EQUIPMENT

6.4.1.2 GENERAL MANUFACTURING AND PROCESS MACHINERY

This category covers a wide range of equipment of various shapes and sizes. It includes isolated pieces of equipment as well as manufacturing lines that consist of numerous components requiring precise alignment. Mechanical components may be constructed of deformable materials and attachments or rigid components and attachments; they may be floor-, wall-, or roof-mounted.

Current codes require anchorage for all equipment weighing over 400 pounds, equipment weighing over 100 pounds that are subject to overturning, and items weighing over 20 pounds that are mounted more than 4 feet above the floor.

TYPICAL CAUSES OF DAMAGE

- Unanchored or poorly restrained equipment can slide, tilt, overturn, or fall. Poorly reinforced housekeeping pads may slide or fail.
- Components may be damaged by shaking or pounding, or may be crushed by other fallen components. Failure of large nonstructural components may result in damage to structural elements due to impact or falling.
- Items crossing seismic joints, attached to adjacent floors, penetrating structural elements, or connections between flexible and rigid components may be particularly vulnerable.
- Machinery may cease to function due to misalignment or internal damage.
- Contents, fluids, or hazardous materials may slosh, mix, or spill.
- Connections of fuel lines, electrical lines, optical cable, piping, or ductwork may be damaged; runs of piping, ducts, or cable may be damaged.
- Loss of function of manufacturing equipment can cause significant business interruption losses.

Damage Examples

Figure 6.4.1.2-1 Damage to conveyors and equipment at a cement plant in the 2010 magnitude-7 Haiti Earthquake (Photos courtesy of Eduardo Fierro, BFP Engineers).

Figure 6.4.1.2-2 Damage to silos, conveyors and equipment at a grain operation in the 2010 magnitude-8.8 Chile Earthquake (Photos courtesy of Eduardo Fierro, BFP Engineers).

SEISMIC MITIGATION CONSIDERATIONS

- In addition to requirements in ASCE/SEI 7-10 *Minimum Design Loads for Buildings and Other Structures* (ASCE, 2010), anchorage design for equipment may be governed by specialty codes and standards such as ASME, ASHRAE, IEEE, API.
- See Sections 6.4.1.1 and 6.4.1.3 for sample details for floor-mounted equipment and see FEMA 412 *Installing Seismic Restraints for Mechanical Equipment* (2002), FEMA 413 *Installing Seismic Restraints for Electrical Equipment* (2004) and FEMA 414 *Installing Seismic Restraints for Duct and Pipe* (2004) for example details for MEP equipment, piping and ductwork. Many of the attachment details in these documents could be adapted for use with other types of equipment.
- Some equipment has been shake table tested and is rated for seismic loading by their vendors; inquire about seismic load ratings and seismic anchorage details when any new equipment is purchased.
- For vulnerable items that require a long lead time to replace, it may be prudent to stock replacement parts or equipment in order to reduce an outage following an earthquake.
- Special attention is required for control rooms and emergency generators to ensure that a facility may be shut down safely after an earthquake.
- Flexible connections should be provided for fuel lines and piping where they connect to rigidly mounted equipment.
- Design of seismic bracing and anchorage for complex manufacturing systems is a significant engineering challenge and should be handled by design professionals with specific expertise in this area. Nonstructural bracing should be checked regularly to ensure that the anchorage has not been compromised. It may be prudent to have a standing agreement with a design professional familiar with the facility to perform postearthquake inspections in order to facilitate speedy repairs and reduce the outage time.

6.4 MECHANICAL, ELECTRICAL, AND PLUMBING COMPONENTS

6.4.1 MECHANICAL EQUIPMENT

6.4.1.3 HVAC EQUIPMENT WITH VIBRATION ISOLATION

This includes HVAC equipment, typically of sheet metal construction, that is floor- mounted with vibration isolators to prevent the transmission of mechanical vibrations into the building. Current codes require anchorage for all equipment weighing over 400 pounds, equipment weighing over 100 pounds that are subject to overturning, and items weighing over 20 pounds that are mounted more than 4 feet above the floor.

TYPICAL CAUSES OF DAMAGE

- Vibration isolated equipment is particularly vulnerable to earthquake damage unless some type of snubbers, bumpers, or vendor-supplied restraints are used. Open and housed springs do not have adequate capacity to resist shear and uplift.
- Items can slide, tilt, overturn, or fall.
- Internal components may be damaged by shaking.
- Connections of fuel lines, electrical lines or ductwork may be damaged; machinery may cease to function due to misalignment, failure of the isolators, or internal damage.

Damage Examples

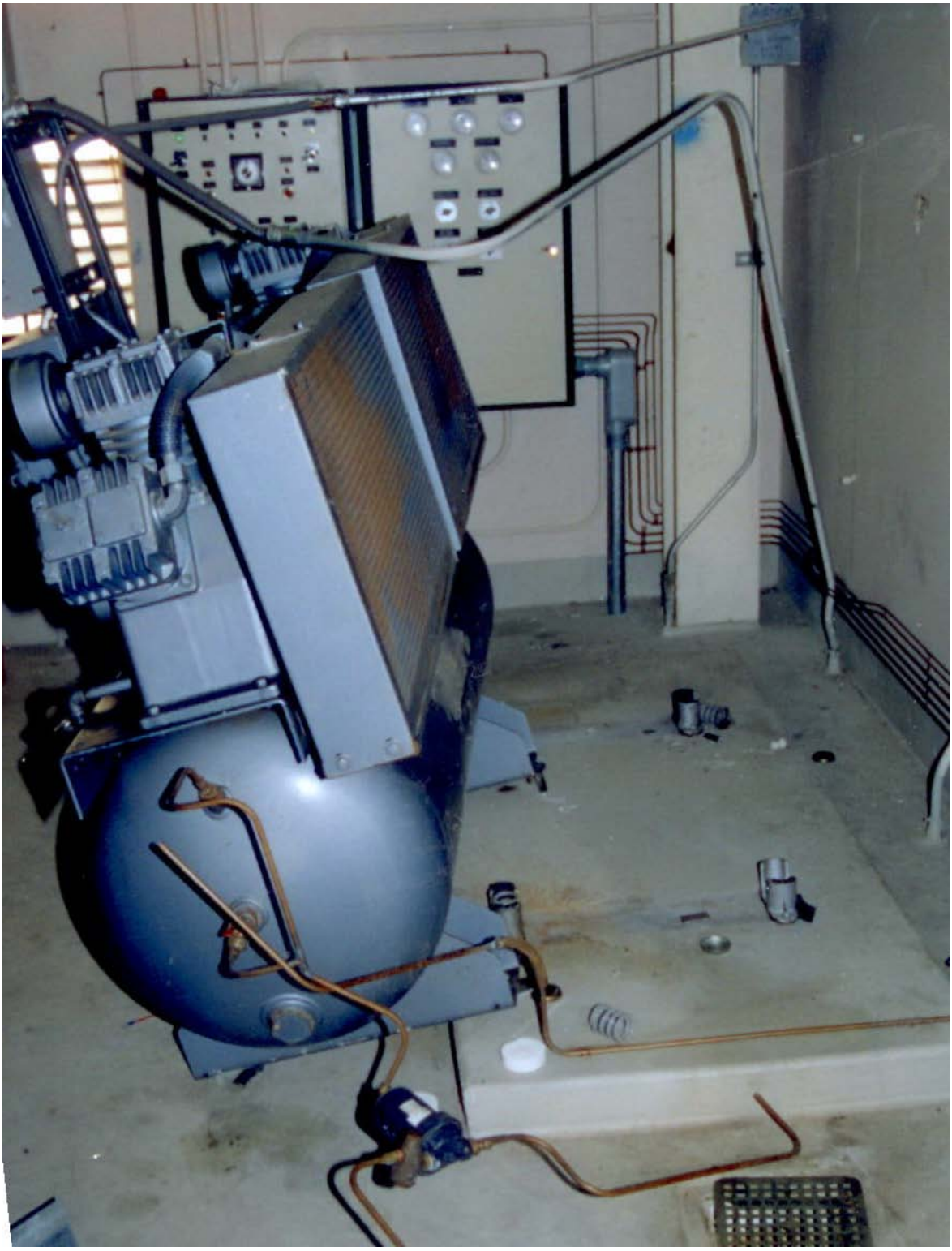

Figure 6.4.1.3-1 Failure of compressor mounted on vibration isolators in the 1994 Northridge Earthquake (Photo courtesy of Wiss, Jenney, Elstner Associates).

Figure 6.4.1.3-2 Failure of pump mounted on three vibration isolators and damage at wall penetration (Photo courtesy of Mason Industries).

Figure 6.4.1.3-3 Failure of an entire support assembly including vibration isolators (Photo courtesy of Mason Industries).

Figure 6.4.1.3-4 Rooftop equipment on isolators collapsed onto skid (Photo courtesy of Mason Industries).

SEISMIC MITIGATION CONSIDERATIONS

- Two methods are used for anchoring floor-mounted equipment on vibration isolators:
  1. Open springs used in conjunction with snubbers or bumpers.
  2. Restrained springs with rated capacity to resist the anticipated seismic shear and uplift.

- Rated housed springs with vertical travel limits should be used for seismic restraint applications.
- Flexible connections must be provided for fuel lines and piping.
- Refer to FEMA 412 *Installing Seismic Restraints for Mechanical Equipment* (2002) and FEMA 414 *Installing Seismic Restraints for Duct and Pipe* (2004) for additional information and details.
- HVAC equipment or other items required for use in a hospital or essential facility would be classified as designated seismic systems and may require engineering calculations, equipment certification and special inspections. Check with the jurisdiction for specific requirements.

Mitigation Examples

Figure 6.4.1.3-5 Restrained springs used to support heavy equipment (Photo courtesy of Mason Industries).

Figure 6.4.1.3-6 Open springs and snubbers used to support equipment (Photo courtesy of Mason Industries).

Figure 6.4.1.3-7 Seismic shake table testing of an air-handler unit and vibration isolation restraint system as part of the MCEER-ASHRAE project (Photos courtesy of André Filiatrault, MCEER).

Mitigation Details

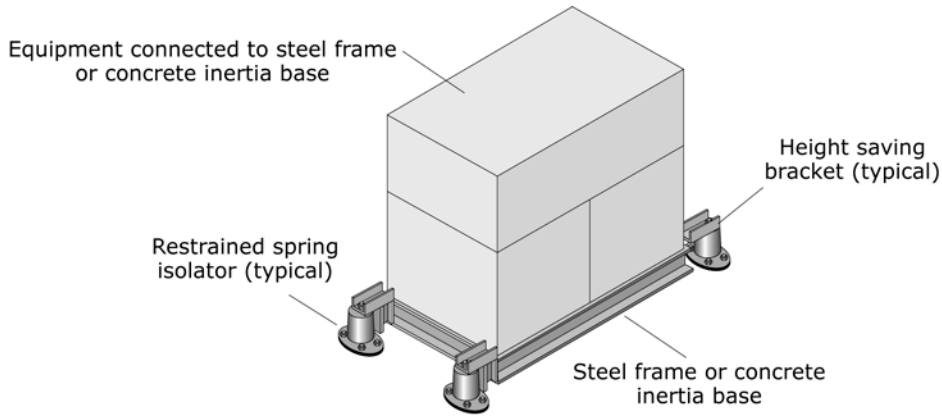

Supplemental base with restrained spring isolators

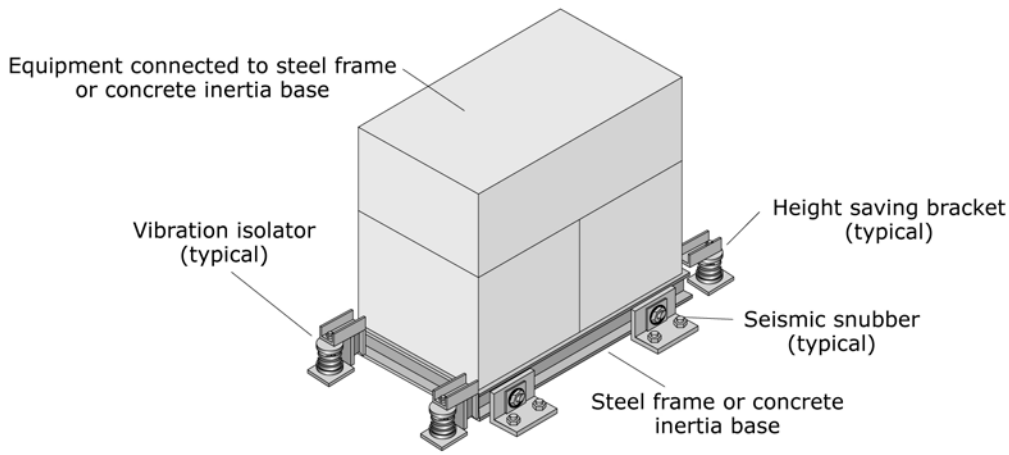

Supplemental base with open springs and all-directional snubbers

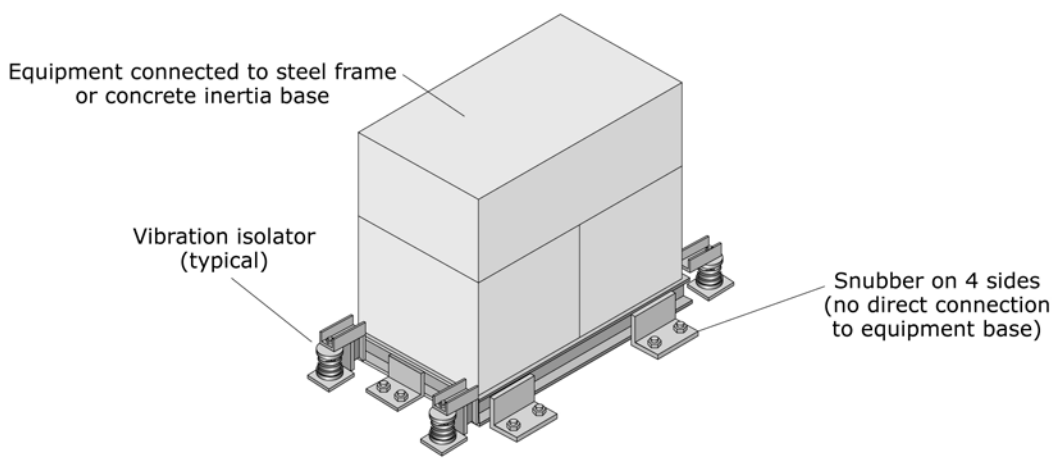

Supplemental base with open springs and one-directional snubbers

Figure 6.4.1.3-8 HVAC equipment with vibration isolation (ER).

6.4 MECHANICAL, ELECTRICAL, AND PLUMBING COMPONENTS

6.4.1 MECHANICAL EQUIPMENT

6.4.1.4 HVAC EQUIPMENT WITHOUT VIBRATION ISOLATION

This includes dry-side HVAC equipment, typically of sheet metal construction, that is rigidly mounted to the floor, wall or roof. Current codes require anchorage for all equipment weighing over 400 pounds, equipment weighing over 100 pounds that are subject to overturning, and items weighing over 20 pounds that are mounted more than 4 feet above the floor.

TYPICAL CAUSES OF DAMAGE

- Unanchored or inadequately anchored items can slide, tilt, overturn, or fall.
- Connections of fuel lines, electrical lines or ductwork may be damaged; machinery may cease to function due to misalignment.

Damage Examples

Figure 6.4.1.4-1 Poorly anchored compressor jumped off the undersized anchor bolts in the 2010 magnitude-8.8 Chile Earthquake (Photo courtesy of Eduardo Fierro, BFP Engineers).

Figure 6.4.1.4-2 Unanchored rooftop units thrown off their supports during an earthquake (Photo courtesy of Maryann Phipps, Estructure).

Figure 6.4.1.4-3 Numerous poorly anchored rooftop units toppled in the 2010 Chile Earthquake (Photos courtesy of Rodrigo Retamales, Rubén Boroschek & Associates).

SEISMIC MITIGATION CONSIDERATIONS

- See Section 6.4.1.1 for rigid floor mount details and Section 6.4.1.3 for vibration isolation floor mount details.
- Special consideration is needed for rooftop units. Such units are typically mounted on curbs or platforms to facilitate waterproofing and flashing. Curbs may be custom-built on site or premanufactured. Detailing for seismic restraints must include a connection between the equipment and the curb and the curb and the roof framing. In addition, the curb itself must be sufficiently strong to deliver earthquake forces from the unit to the roof.
- See FEMA 412 *Installing Seismic Restraints for Mechanical Equipment* (2002) and FEMA 414 *Installing Seismic Restraints for Duct and Pipe* (2004) for details for wall-mounts,

roof-mount with flashing details, ducts and piping, and additional information regarding hardware and installation.

Mitigation Details

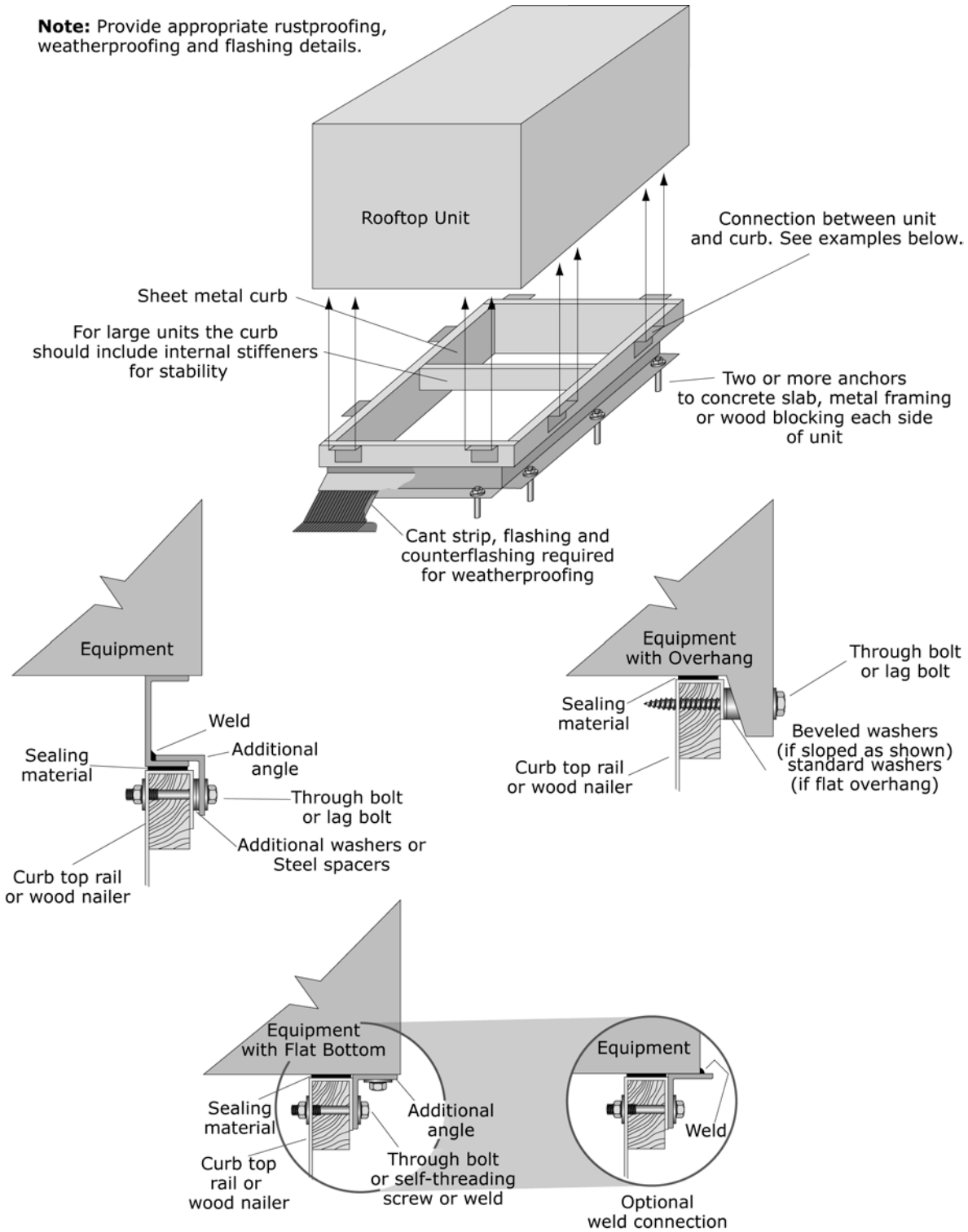

Figure 6.4.1.4-4 Rooftop HVAC equipment (ER).