U N I T F I V E

What Should People Do Before, During, and After an Earthquake?

Following the pattern established in earlier units, this set of lessons returns students from model structures to the actual structures in their own community. Some of the activities will require outside help. The relationships with experts in the community that you and your students established in Unit 1 and have developed in subsequent units will stand you in good stead.

In Lesson 1, students explore the tantalizing possibilities of earthquake prediction. The first activity is based on an actual series of events stemming from one rather ambivalent recent prediction of an earthquake on the New Madrid Fault, the site of the most widely felt earthquake in U.S. history in 1811-1812. Students read accounts of the prediction and its aftermath, discuss the reactions of different groups, and learn how to evaluate such a prediction. In the second activity they consider levels of probability and categorize various scientific and nonscientific approaches to predicting earthquakes. When they have finished these activities, they will realize they cannot place their faith in any warning system currently available. Their best bet, wherever they live, is to be prepared for earthquakes and other natural disasters.

Lesson 2 begins where the students are, in school and at home. The first activity is an earthquake and evacuation drill, followed by a classroom hazard assessment. The earthquake and evacuation drill is absolutely basic for your students' safety; *do not omit this lesson.* Even if your students do not live in an earthquake-prone area now, they may someday.

Students develop a checklist for home hazard assessment in the second activity of Lesson 2. In Lesson 3, they learn the elements in the construction of a typical wood frame house by visiting a house to inspect its foundation and other structural elements. They complete a checklist and take home detailed instructions for reinforcement projects they can do with the assistance of a parent or other adult.

Moving out into the community, in Lesson 4 students evaluate the potential earthquake damage to various structures in their community. They will conduct a sidewalk survey to estimate vulnerability of buildings to earthquake damage. Engineers and other experts you contacted earlier will provide valuable assistance in this project. They can not only help students to generate data, but also advise them on how to interpret it.

Lesson 5 builds directly on work students did in Unit 1 to assess their own community's vulnerability. In this activity they will see the relationships of various secondary disasters to the earthquake that initiates them and describe how local emergency services would work together to alleviate their effects. The community map begun in Unit 1 and elaborated in Unit 2 will be further developed in this activity.

5.1

Predicting EARTHQUAKES

ACTIVITY ONE

I READ IT IN THE NEWSPAPER

RATIONALE

By reading newspaper accounts of an earthquake "prediction" or forecast that proved to be false, students will learn to be critical consumers of media reports. They will analyze the content of articles spanning more than a year and compare the varying reactions of different people and groups.

FOCUS QUESTIONS

What would you do if an earthquake was predicted for your town?

OBJECTIVES

Students will:

1. Read media accounts analytically.
2. Visualize the effect of an earthquake prediction on a community.
3. Know how to obtain reliable earthquake information from the appropriate government agencies.

MATERIALS

- Student copies of Master 5.la, Newspaper Accounts (6 pages)
- Paper and pencils or pens

PROCEDURE

Teacher Preparation

Read the articles before you distribute them to students. Outline the highlights of each article, especially noting the effects of the forecast upon the community, how the forecast is reported slightly different in each story, and the response of governmental agencies.

A. Introduction

Tell the class that in the fall of 1989, climatologist Iben Browning reportedly predicted that an earthquake of magnitude 6.0 or greater

VOCABULARY

Prediction: a statement that something is likely to happen based on past experience. A prediction is usually only as reliable as its source.

Probability: in mathematics, the ratio of the number of times something will probably occur to the total number of possible occurrences. In common usage, an event is probable, rather than merely possible, if there is evidence or reason to believe that it will occur.

Retrofitting: making changes to a completed structure to meet needs that were not considered at the time it was built; in this case, to make it better able to withstand an earthquake.

TEACHING CLUES AND CUES

According to the Federal Emergency Management Agency (FEMA), an earthquake prediction must include time, place, magnitude, and probability. An earthquake forecast is much less precise.

would occur on December 3, 1990, plus or minus 48 hours. However, his forecast also said that the earthquake would occur between the 30° N and 60° N lines of latitude, an area that encircles the Earth. According to scientists, the probability that a seismic event of magnitude 6.0 or greater will happen in such a broad zone of the Earth's surface is actually very high.

However, the media reported that Browning had specifically predicted a catastrophic earthquake in the highly seismic area of New Madrid, Missouri, which in 1811-12 was the epicenter of the most powerful earthquakes ever recorded in the continental United States. People in the New Madrid area reacted to the continual flow of media coverage about the impending quake by stocking up on food and water, purchasing expensive earthquake insurance, making plans to travel to distant places, developing emergency community preparedness plans, and retrofitting buildings. School systems even scheduled "earthquake breaks." On the day of the predicted seismic event, the little midwestern town of New Madrid was overrun by the television and newspaper media.

B. Lesson Development

1. Divide the class into groups of four or five students each and distribute at least two newspaper articles on Master 5.la to each group. Instruct students to read the articles and take notes individually, then discuss what they have read. Student notes should answer the following questions:

- How did government agencies react to the prediction?
- How did the scientific community react?
- How did some entrepreneurs react (people who saw an opportunity to make money)?
- How did many laypeople react?

2. Now ask students in each group to pool their notes and write a brief team report that covers the following points:

- How did Iben Browning arrive at his prediction?
- How did the people of the New Madrid seismic zone and surrounding, areas react to the media coverage?
- How did the scientific community react?
- How did the news media react?
- In your opinion, which governmental agencies should citizens consult to obtain information about the accuracy of earthquake forecasting?
- How would personally react to headlines and newspaper accounts of a devastating earthquake that was forecast for your home town?

3. Invite teams to orally present their reports to the class. When all groups have reported, discuss and analyze the teams' conclusions in light of new information from other teams. Encourage students to point out discrepancies among the various reports. (Iben Browning's

TEACHING CLUES AND CUES

The second activity in this lesson, Faulty Reasoning, reviews the federal government's official protocol for assessing earthquake predictions.

doctoral degree, for example, is variously reported as being in physiology, in climatology, in zoology, in biology, and in genetics and bacteriology.) Point out, however, that the pages were originally arranged in chronological order, so it takes the full set to tell the full story. No one group will have as much information as the class as a whole.

C. Conclusion

Invite discussion of the nature of Browning's earlier "successful" predictions. Could they have been of the same open-ended nature as this one? How difficult is it to successfully predict an earthquake after it has happened?

Be sure students know where to obtain accurate earthquake information: from the U.S. Geological Survey, the Federal Emergency Management Agency, their state office of emergency services, and the state geological surveys. (The latter have various names, such as the California Governor's Office of Emergency Services, the Missouri Emergency Management Agency, the Vermont Division of Emergency Management, and the Utah Division of Comprehensive Emergency Management.) Check the resource list in Unit 1 and your local telephone books for these listings.

ADAPTATIONS AND EXTENSIONS

1. According to the articles, Browning specified a time period that would coincide with the Moon's maximum gravitational attraction upon the Earth. Ask students how they would set up a test to demonstrate that the Moon affects earthquake or volcano activity.

2. Distribute copies of the August 1991 article, the last in the set, to every student, or read it aloud with the class. Discuss the conclusion that the scientific community was partly to blame.

ACTIVITY TWO

FAULTY REASONING

RATIONALE

Because of the randomness of seismic events and the fact that scientific understanding about earthquake-generating mechanisms is still evolving, earthquake prediction today is imprecise, indeed even speculative.

FOCUS QUESTION

Why is predicting earthquakes not an exact science?

OBJECTIVES

Students will:

1. Explain the purpose of predicting earthquakes.
2. Identify several types of seismic predictions.
3. Explain why earthquake prediction is complex and based largely on probability.

VOCABULARY

Generalization: a statement made after observing occurrences that seem to repeat and to be related.

MATERIALS

- Chalkboard or overhead projector, chalk or markers
- Student copies of Master 5.1b, Approaches to Predicting Earthquakes
- Student copies of Master 5.1c, Levels of Generalization: Classification Chart
- Back of Master 5.1c, Answer Key

PROCEDURE

A. Introduction

Tell students that with increasing numbers of the world's people living in active earthquake zones, earthquake prediction or forecasting has been receiving more and more attention in recent years. Begin by asking students to name some advantages of being able to predict earthquakes. Record responses on the overhead or chalkboard. (Likely answers will include saving lives and reducing property loss and damage, providing guidelines for development and human settlement, providing valuable data for the scientific community, helping people to prepare for earthquakes on both a short-term and a long-term basis, and allowing communities to return to normal more quickly after an earthquake.)

Ask: Would there he any disadvantages to being able to predict or forecast earthquakes? (Answers might include financial losses to businesses forced to close and the anxiety people would feel if they knew an earthquake was imminent.

Lesson Development

1. Ask: Are we, in fact, able to predict or forecast earthquakes with any certainty? Students may have heard of some theories and attempts at prediction, but they will also know that earthquakes have claimed lives and property in recent years. If earthquake prediction was an exact science, these losses would have been greatly reduced.

Remind students that while significant efforts at developing systems of accurate prediction are underway in earthquake-prone countries like Japan, the United States, and the People's Republic of China, seismologists are still a long way from accurate prediction. Point out that of the several types of phenomena that may predict an earthquake, many may be due to other causes and yield false alarms.

2. Organize the class into groups of three of four students each. Have all the students in each group list these terms at the top of a blank sheet of notebook paper: time, magnitude, place, and probability. Ask each group to write briefly how they think these terms relate to seismic prediction and why they are important. Also discuss the idea of coincidence, versus that of causality. For example, a sunrise occurs within 24 hours of every earthquake, but sunrises cannot be said to cause earthquakes.

TEACHING CLUES AND CUES

Point out that the degree of probability is an essential element in prediction. You can predict with a probability of 99.9% that an earthquake of magnitude 2 will occur in southern California tomorrow. For larger quakes, the degree of probability drops sharply.

3. After several minutes, ask one student in each of the groups to summarize the group's findings. While answers may vary, the pattern of response should consistently indicate how helpful such precise information would be to surviving an earthquake with minimum loss of life and property damage.

4. Write this statement on the overhead or chalk board: "Earthquake prediction or forecasting takes place at several levels of generalization and involves various approaches." Stress the term generalization, so students will recognize that prediction is broadly based and in many instances, largely theoretical.

5. Distribute copies of Master 5.lb and instruct students to classify each of the approaches to predicting earthquakes listed into one of the three categories on the table that follows. Their challenge is to organize the data about earthquake predictions into a chart classifying different kinds of information.

6. When the students have developed the charts, allow time for sharing and comparing answers. The important element in this part of the activity is not that students make the "right" classification, but that they can defend their reasoning.

C. Conclusion

Explain to the class the federal government's official protocol for evaluating earthquake predictions.

The National Earthquake Prediction Evaluation Council (NEPEC) convenes to hear evidence for the prediction of an earthquake above magnitude 5.5. If the NEPEC validates the prediction, the following will occur:

> *Issuance of Earthquake Predictions. The Director of the United States Geological Survey (USGS) is hereby given the authority, after notification of the Director of the Federal Emergency Management Agency (FEMA), to issue an earthquake prediction or other earthquake advisory as he [sic] deems necessary. ... The Director of FEMA shall have responsibility to provide state and local officials and residents of an area for which a prediction has been made with recommendations of action to be taken.*
>
> Public Law 95-124, Earthquake Hazards Reduction Act, as amended [P.L. 96-472]

Add that the USGS also issues earthquake advisories. The state of California has its own earthquake prediction evaluation council and its own notification protocol.

Ask students to review the notes they have taken and the chart data they have organized, then select the theory or approach that seems most plausible to them. As homework or in class, each may write a personal prediction of how this approach will be developed and refined in the coming years. Students may want to defend their predictions in a class discussion.

TEACHING CLUES AND CUES

According to Bruce Bolt (*Earthquakes*, 1993 edition, p. 185), the methods of prediction that currently show the most promise require elaborate equipment and many workers, so that their cost is likely to be prohibitive.

ADAPTATIONS AND EXTENSIONS

1. It may be useful to illustrate the concept of mathematical probability with dice or the toss of a coin. The probability of heads in a coin toss is 50-50.

2. Invite interested students to learn more about some of the scientific prediction methods, such as creep meters and radon monitoring, and report back to the class. Consult the unit resources and your local libraries. ▲

The Earthquake Reporter

Volume 1 "News of Geologic Importance" Issue 1

From the *Arkansas Democrat*, November 29, 1989

New Madrid tremors due

From the *Dallas Morning News,* July 22, 1990

Prediction prompts residents to wonder, worry

tremors due, forecast says

MEMPHIS, TN—A climatologist who predicted the San Francisco earthquake Oct. 17 says the New Madrid Fault region could be in for serious tremors next year.

Iben Browning is a Tijeras, NM, scientist who develops long-range weather forecasts for businesses. He bases his quake predictions on the theory that tidal forces of the Sun and Moon produce stress in the Earth.

Browning, an inventor with a doctorate in physiology, has studied weather for 30 years, but does not publish his findings in scientific journals. He is better known in business circles, and publishes a monthly newsletter. His New Madrid forecast is based on a 179-year cycle of tidal forces last felt in 1811. Browning said the conditions will be ripe for tremors Dec. 3, 1990.

"The configuration will be the same as it was the year the original earthquake went off," Browning said Monday.

That isn't to say tidal forces would cause a major earthquake next year south of St. Louis to a point north of Memphis, he said.

Experts have predicted a major earthquake in the New Madrid zone could cause major damage to match that of the recent California quake.

Dr. Arch Johnston, director of the Center for Earthquake Research and Information at Memphis State University, said the tidal force theory is backed by some scientific data, but isn't conclusive by any means.

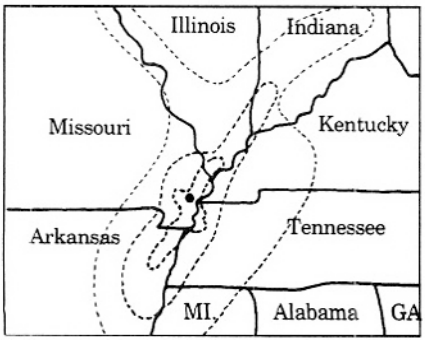

THE NORTHEAST ARKANSAS TOWN OF 25,000—a county seat with Air Force base and several small industries—is perched directly over the site of [Iben Browning's earthquake] prediction. Knowing what lies beneath the flat delta farmland clearly makes some uneasy.

"Our fire chief told our firemen they can't take a vacation. Some already asked," said Mr. Edwards, a Fire Department lieu- tenant. "He said we could ship our families out, but we're staying. It was said kind of in a jest, but I think that everyone is actually pretty serious about this."

One geophysicist studying Dr. Browning's methods says the projection can't be ignored because he had predicted other earthquakes—including last October's California temblor.

But most experts dismiss the warning. They acknowledge that there is a 50-50 chance that a destructive quake will hit the fault by decade's end, but they say the projection lacks scientific validity.

"It seems like people are becoming worried about it for no reason at all," said Dr. Brian Mitchell, chairman of the Department of Earth and Atmospheric Sciences at St. Louis University.

At the center of the furor is an ailing 72- year-old inventor from Tijeras, NM, who has spent much of the last 20 years offering clients advice on the esoteric topic of future world climates.

Dr. Browning declined to be interviewed. But his daughter, Evelyn Browning Garriss, said her father began forming his wide-ranging theories while working at Sandia Laboratories in Albuquerque, NM. Dr. Browning has a doctorate in biology from the University of Texas, and Ms. Garriss said his interests range across many fields. She said he has been a test pilot and developed weaponry and TV technology.

Ms. Garriss said the ideas that spawned her father's latest projection arose from research for the U.S. government on peaceful uses for atomic bombs. While studying how explosions affect the atmosphere, she said, he became fascinated with volcanoes. He found that volcanoes are triggered by the same gravitational pulls that cause ocean tides, and he "discovered that the same forces that trigger volcanoes also trigger earthquakes," she said.

That theory produced his projection of an earthquake on the New Madrid Fault. Although rejected by most scientists, Dr. Browning's new warning has gained attention from many in a region already worried about the New Madrid Fault's potential for destruction.

Some earthquake-preparedness efforts have been underway for six years because seismologists warned in the early 1980s that a temblor measuring 6.0 on the Richter scale had a 50-50 chance of occurring before 2000. Indiana, Kentucky, Missouri, and the cities of Carbondale, IL, Memphis, TN, and St. Louis have approved seismic building codes in the past two years.

Since 1984, seven states and the Federal Emergency Management Agency have developed a regional emergency response system through the Central U.S. Earthquake Consortium in Memphis.

Most state officials place little stock in the prediction, but they hesitate to reject it for fear of encouraging complacency about real threats posed by the fault. Mississippi officials are accelerating preparedness planning. And in Illinois, officials are forming a plan to address panic that might result if any detectable tremors hit the region near the predicted date, said Tom Zimmerman, the state's emergency planning director.

To further soothe regional concerns, state emergency officials want scientific experts to formally evaluate the prediction. Several state officials said they have asked the National Earthquake Prediction Evaluation Council, based in California, to address the issue.

The council of pre-eminent earth scientists has turned down the request.

"They don't want to glorify the prediction," Dr. Mitchell said.

San Francisco Chronicle, July 25, 1990

What If He's Right?

by Jerry Carroll

ALBUQUERQUE, NM—The scariest man in America walked through the door with his

predicting the eruption of Mount St. Helens on May 18, 1980. In this latter instance he

fields of bio-engineering, computers, electronics, environmental systems information theory, microbics, microminiaturization, optics, and space navigation.

"I was a test pilot in Victorville [CA], flying two engine and four engine airplanes."

daughter, looking with his bald head and spectacles like everybody's idea of a nice grandpa. Given what we were going to talk about, I half expected to see Iben Browning in long robes and a tall wizard's list.

He told audiences before last October's earthquake that the earth was going to move in the Bay Area, and now he says there is a 50-50 chance there'll be a major earthquake December 3 on the New Madrid Fault in Missouri, on the Haywood Fault in East Bay, or in Tokyo.

Browning bases his forecasts—which he calls mathematical calculations about the pressures the Sun and Moon exert on the Earth's surface—on forces he says have a profound if little known effect on the course of civilization.

While his projections fascinate the media, they leave the science community with a healthy dose of skepticism.

"No evidence," say some.

Scientists who have studied tidal influences of the Sun and the Moon have come up with no evidence that they trigger earthquakes, said James Dorman, associate director of the Center for Earthquake Research and Information at Memphis State University. In 1972, Dorman studied 30,000 earthquakes looking for a correlation, but failed to find one. "Browning has not convinced anyone he knows what he's doing," he said.

But Browning has his believers.

The New Madrid Fault was responsible in 1812 for the mightiest earthquake in American history. Estimated at more than 8.5 on the Richter Scale, it toppled chimneys in Cincinnati, made church bells ring in Boston, and awakened James Madison in the White House and Thomas Jefferson in Monticello. A similar quake today could claim hundreds of thousands of lives and cause more than $50 billion in damages.

The South Mississippi County School District No. 57 in Arkansas, for one, thought enough of Browning's warning to cancel classes December 3 and 4. The Missouri and Arkansas National Guards are planning earthquake exercises those days.

In a memorandum last month to midwestern earthquake experts and the Missouri Emergency Management Agency, David Stewart of the Center for Earthquake Studies at Southeast Missouri State University in Cape Girardeau, MO, wrote: "That he was correct in the Loma Prieta event is a verifiable fact."

Furthermore, Stewart continued, "He was also apparently correct within a few days of was speaking before a group of several hundred in Portland, OR, on May 15, 1980 when he told them it would go in about a week." The volcano, dormant for 123 years, had been threatening to blow since March 27.

Stewart said: "His calculations had also picked the dates of Sept. 19, 1985, and Nov. 13, 1985, upon which the Mexico City earthquake and the Nevado del Ruiz volcano eruption in Columbia, respectively, occurred."

The memo, which was leaked, got Stewart in hot water. "He swallowed Browning's story hook, line, and sinker," Dorman said. "Stewart did not boost his own stock in the scientific community."

A Visionary?

So who is this man and how can he appear to do with a sharp pencil what seismologists can't, for all their high-tech laser beams, strain gauges, and tilt and creep meters? Is he a seer a visionary who screws his eyes shut and holds a finger to his temple?

Do we lump him in the same category as Jim Berkland, the Santa Clara County geologist who says he predicts earthquakes using a theory based in part on how many pets run away from home?

"He has an intellect like a giant," said Dwaine W. Rogge, president and founder of the Commerce Financial Group in Lincoln, NE.

"He must have an IQ of 200-plus," said agricultural specialist Roger Spencer, a first vice-president of Paine-Webber of Chicago.

The two of them, like the majority of Browning's clients and the subscribers to his monthly newsletter, rely on him for help in investments and business decisions based on Browning's analysis of climatic trends. Before diabetes limited his mobility, Browning shared top billing at business and economic conferences with the likes of Milton Friedman and Henry Kissinger. He spoke 40 to 50 times a year, getting $2,500 for his talks. "Earthquake projections," Browning told me, "are purely a sideline, one that has really become a nuisance."

He said that he made only seven projections about earthquakes or volcanoes erupting and has been right each time. It doesn't bother him that his fellow scientists ignore him. Given his lack of formal credentials in the field, it's to be expected, he said. "Anyway, I'm not talking to them. I'm talking to my clients."

Scientist, Master Consultant

Browning is primarily an inventor. He has 67 patents, the most recent for a high-definition television system licensed to the Japanese. He has been a consultant for business in the ing two-engine and four-engine airplanes." While fellow pilots drank beer after work, Browning, who has total recall, stuffed his mind with the Encyclopedia Brittanica. "I read articles at random, integrating them into what I already knew." By war's end, he had read more than a thousand.

After the war, he got a master's degree from the University of Texas in physics and bacteriology and a doctorate there in genetics and bacteriology.

Military Consultant

When he wasn't inventing, Browning worked as a consultant for defense industries. But while studying the effects of atomic bombs for the Sandia National Laboratories in 1957 he realized they were puny compared to the power unleashed by volcanic eruptions.

That's when he began his study of climate, immersing himself in several scientific disciplines in a manner not often done in an age of narrow specialization. The data he consulted ranged from magnetic field intensities during ancient Egyptian dynasties to records of lynx pelts bought from trappers by Hudson Bay Co. in the 17th century.

He became convinced that earthquakes and volcanic eruptions were triggered by sunspot activity and the pull of the Sun and Moon on the Earth's brittle crust—the tidal effect.

Seismologist William Ellsworth of the U.S. Geological Survey in Menlo Park, a major leader in quake research, says, "If there is a tidal effect, it clearly is not something either universal or of any practical importance."

At least two other scientists agree.

Brian Mitchell of the Department of Earth and Atmospheric Sciences at St. Louis University and Arch Johnson of the Center for Earthquake Research in Memphis wrote disaster officials in the New Madrid Fault area pointing out that of five earthquakes Browning said were triggered by tidal forces, only one occurred during a high-tide period.

"I don't think the prediction is anything we should pay attention to," Mitchell said.

Not Over Yet

Browning says that even if December 3 (when tidal forces hit a 27-year high) arrives and it turns out that seismic pressures here, in Missouri, and Japan haven't yet built to the point where earthquakes are triggered, that doesn't mean we're out of the woods. January 19, 1992, will bring on the highest highs in more that 1,600 years.

You're a pessimist, I said. "No I'm not," Browning replied with equanimity. "Man will survive. He always has."

The *Dallas Morning News,* July 26, 1990

Experts to evaluate earthquake warning

by Lee Hancock

The U.S. Geological Survey will officially evaluate a New Mexico man's warning that an earthquake may rock the central United States on Dec. 3, 1990, an agency official said Wednesday.

Walter Hays, an official with the Geological Survey in Washington, said the agency would convene a panel of geologists and seismologists from throughout the central United States to study the prediction.

"We're not at all impressed with this forecast," he said. "On the surface we would not expect there is any basis for concern. But we do want to set people at ease and be satisfied in our own minds that we haven't overlooked something."

The location of the predicted earthquake is along the New Madrid Fault, which runs between Marked Tree, AR, and Cairo, IL, and has branches in West Tennessee and the Missouri boot heel.

Scientists say it is impossible to predict exactly when an earthquake will occur. However, they say they are trying to estimate the probability of an earthquake along several highly active faults in the United States.

The decision to evaluate the prediction follows a plea for help by the region's seven-state earthquake response coalition, an agency that has been struggling for more than a month to address growing regional fears about the prediction by Iben Browning, a self-styled climatologist from Tijeras, NM.

Dr. Hays said U.S. Geological Survey scientists have considered about 300 predictions since 1977 that ranged from the scientific to the ridiculous. But he said that the widespread public concern makes Dr. Browning's prediction unique and that it was the primary reason for the evaluation.

Dr. Hays said the study probably would be completed by the end of September.

The National Earthquake Prediction Council, an advisory board of earth science experts set up by the U.S. Geological Survey, last month refused to evaluate Dr. Browning's prediction. "They didn't want to glorify it," one mid-south seismologist said.

Dr. Hays said the 13-member council would evaluate the findings of the regional scientists' group at the request of the federal geological agency.

"On the surface we don't expect to see any basis for this to be a credible prediction," he said. "But you have to go through a process."

The council has officially endorsed 13 predictions since its creation in 1980, said Dr. Hays, deputy chief for research applications in the Geological Survey's office of earthquakes, volcanoes, and engineering. The endorsed predictions, which project activity along faults in Alaska and California over periods ranging from four to 30 years, are still pending, Dr. Hays said.

The *New York Times,* August 20, 1990

Midwest Quake Is Predicted

by William Robbins

NEW MADRID, MO., AUG. 15—Life on the fault line is always interesting, as people in this trembly old Mississippi River town often say, but a prediction by a man named Iben Browning is making life hereabouts downright exciting.

Dr. Browning, a climatological consultant from New Mexico, has calculated that on Dec. 3, give or take 48 hours, this area could once again be the center of a destructive earthquake. People in Missouri and neighboring states are taking his prediction seriously enough to plan events like National Guard drills and informational town meetings, to store food, and to consider closing schools on the appointed day.

There is considerable skepticism among experts and residents of this area about Dr. Browning's prediction, which involves calculations of tidal forces resulting from the gravitational effects of the Earth, the Moon and the Sun. But New Madrid is conditioned by its history to take a sober view of warnings.

This town is near the epicenter of one of the most devastating earthquakes ever recorded in North America. A series of quakes, beginning with a colossal shock, struck at 2 a.m. on Dec. 16, 1811, while settlers and Indians in the Mississippi River frontier slept. Tremors shook the earth almost continuously for months, and two even greater shocks struck on Jan. 23 and Feb. 7 1812.

Debate on Predictability

Seismologists say it is impossible to predict when another big earthquake might strike. But based on what they know of geologic conditions, they calculate that there is a 50 percent chance for a 6.3-magnitude quake by the end of the decade and a 90 percent chance for such a quake by 2040.

Most scientists doubt the ability to pinpoint the date of an earthquake. But at least one, David Stewart, director of the Earthquake Information Center at Southeast Missouri State University in nearby Cape Girardeau, says he has looked into Dr. Browning's previous predictions and accords him respect.

Dr. Browning's previous warnings have been widely reported in another quake-skittish locale, San Francisco. He is known to have predicted the 1989 San Francisco earthquake a week in advance in an appearance before about 500 business executives and their wives at a convention. He is also said to have predicted the eruption of Mount Saint Helens in 1980.

Like the experts, the people with the biggest stake in the debate, those who live here, are also divided on Dr. Browning's prediction.

Don Lloyd, the city administrator, typified the most optimistic stance. "We know it's coming sometime, but it's just as likely to happen tomorrow as next Dec. 3," he said the other day.

Most people are like the police chief, Jimmy Helines, or officials of the National Guards of Missouri and Arkansas. While they are not panicking, they see nothing wrong with taking precautions, either.

Missouri's Army National Guard is planning earthquake exercises Oct. 13 to 14, and the Arkansas National Guard is planning a similar drill Dec. 1 to 5. "We were planning an exercise anyway," said Maj. Cissy Lashbrock, the Arkansas Guard's public infor- mation officer. "But Browning has attracted so much attention, this looked like a good time to let people know we do have a plan."

Mr. Helmes has planned to store food and water supplies in a warehouse and to station school buses nearby for emergency transportation. Mayor Dick Phillips and Mr. Lloyd are planning a town meeting at which Dr. Stewart will discuss precautions.

In addition, officials of a few schools in nearby towns are considering closing them for the day. Gerald Murphy, a high school coach, wants his wife, Beth, to take their baby and get out of town, and James and Gloria Taylor of nearby Lilbourn are planning to take their daughter and son-in-law on a trip on the first weekend in December.

See Quake (next page)

Quake *(from previous page)*

The talk has naturally focused attention on the man who made the prediction.

Dr. Browning's academic background is in mathematics, physics, and microbiology, and his doctorate, in biology, is from the University of Texas. He is also a self-taught climatologist and serves as a consultant on the subject to many businesses and executives.

"No Public Pronouncements"

"I make no public pronouncements," the 72-year-old scientist said in a telephone interview from his home in Sandia Park, NM. "What I say is for my clients." He said predictions that have surfaced publicly have been recounted by members of private audiences.

It was at a convention of the Equipment Manufacturers Institute in San Francisco that he said his calculations indicated an earth

The Wall Street Journal, September 18, 1990

Will the Earth Move on Dec. 3?

Midwest Is Rattled By a Scientist's Prediction of a Major Earthquake

by Michael J. McCarthy

quake there about Oct. 16, the day before it occurred, and one on Dec. 3 in the New Madrid area.

Emmett Barker, president of the institute, was present and heard the predictions.

Regarding Dr. Browning's method, Brian Mitchell, chairman of the Department of Earth and Atmospheric Sciences at St. Louis University, said, "Recent studies with the best available data show no correlation between tidal forces and earthquakes."

And Pat Jorgenson, a spokeswoman for the United States Geological Survey in Menlo Park, CA, said scientists there "are not at this time doing any research into earth tides and any possible relation to seismic activity," although they are aware "that this is a much-discussed proposition." She said that the agency's scientists had conducted studies on the claims but that these "proved inconclusive."

Still, Dr. Stewart, of Southeast Missouri State, said he thinks Dr. Browning's method should not be summarily rejected. "Here's a man who has hit several home runs," he said. "Will he hit another on Dec. 3? We don't know, but that's no excuse for not being prepared."

MEMPHIS, TENN.—Friday nights used to be slow at The Fault Line, a nightclub here on busy Poplar Avenue. But after word spread that a major earthquake was forecast for Dec. 3 in the Midwest, The Fault Line began throwing earthquake parties.

On Friday nights now, hundreds of patrons pour into the club to swig "Earthquake Shooters" and sign up to win December Earthquake Escape Packages to the Bahamas or Hot Springs, AR.

But even as Memphians whoop it up, the prediction that the Big One may come this December is triggering tremors up and down the Mississippi River Valley. Shaken, thousands of people are crowding into earthquake survival classes. In Arnold, MO, 3,000 people showed up for one course.

In Missouri and Arkansas, some schools and businesses have announced plans to close in early December. Entrepreneurs are hawking quake survival insurance, survival kits and gas-line safety gadgets.

Some people are planning to flee. "You can't run from everything," says Tammy McCormick, a nurse in Bytheville, AR, who will take her two youngsters and spend several days with the relatives in North Carolina. "But it seems stupid to stay on a fault line with a prediction like this one."

Iben Browning, a 72-year-old scientist, predicted October's Bay Area quake a week before it happened, say people who heard him speak to the Equipment Manufacturers Institute. And he predicted "geological disaster" on Sept. 19, 1985, along a band of latitude that included Mexico City—where a massive quake struck on that day.

Mr. Browning, who has a Ph.D. in physiology, genetics, and bacteriology, writes a climate newsletter out of New Mexico. He has clients, such as Paine-Webber, Inc., who have long paid for his wisdom on how the weather will affect their agricultural investments.

Since 1971, Mr. Browning says, he has picked the correct dates of four large earthquakes, two volcanoes—and one day with both a volcano and an earthquake.

He bases his forecasts on tidal forces caused by the positions of the Sun and the Moon—an old theory, critics say, that doesn't wash. On Dec. 3, those forces are expected to be at a 27-year high. Mr. Browning says that will exert pressure that could trigger faults already ripe to fail.

A Skeptical Majority

Skepticism abounds. "No responsible scientist can predict an exact day for an earthquake," says Brian Mitchell, a quake expert at St. Louis University, echoing the majority opinion.

But Mr. Browning shouldn't be written off so quickly, says Southeast Missouri State's Mr. Stewart, who recently spent four days with Mr. Browning. "He has a methodology that can determine, plus or minus a window of a day or two, an enhanced probability of a volcano or an earthquake in certain latitudes," says Mr. Stewart. "No one else is able to replicate it, but that doesn't mean it's wrong."

Mr. Browning says it's not easy being on record with predictions that few other scientists will support. "I feel like a lonely little petunia in a cabbage patch," he says. But asked if he enjoys being right, he says, "It's the only damn thing that matters. If one is a business consultant, they don't pay you for being wrong."

Mr. Browning says he is tentatively booked to give a talk in Minneapolis on Dec. 3, and he doesn't plan to go there via St. Louis. But he adds: "I highly recommend against panic. That will kill more people than earthquakes."

The *New York Times,* October 19, 1990

Panel of Scientists Finds No Basis For Prediction of Missouri Quake

ST. LOUIS, OCT. 18 (AP)—Projections of a major earthquake in the Midwest in early December are without scientific basis, a group of scientists said today.

The 11 scientists reporting to the United States Geological Survey said there was a long-term possibility of a major earthquake along the New Madrid Fault, but said there was no credibility in the widely circulated projection made by Iben Browning, a climatologist and business consultant based in Sandia Park NM, of a 50-50 chance it will happen Dec. 3.

Public anxiety over Mr. Browning's New Madrid projection has been widely reported coupled with reports that Dr. Browning had also warned of last year's Northern California earthquake a week in advance in an appearance before about 500 business executives and their wives at a convention in San Francisco.

The scientific group said today that it had found no evidence that Mr. Browning had predicted last year's earthquake. Mr. Browning has said the reports of his predictions are based on accounts from members of the private audiences that he addresses.

A woman who answered the telephone Thursday at Mr. Browning's home and identified herself as his wife said he was unavailable for comment.

The scientists said a transcript of his Oct. 10, 1989, speech showed that "his statement was 'there will probably be several earthquakes around the world, Richter 6 plus, and there may be a volcano or two.' No mention is made of an earthquake occurring in the San Francisco area or even California."

The scientific group issued its finding at a news conference in St. Louis. The scientists who contributed to the report were brought together from universities and governmental agencies to evaluate the scientific validity of Mr. Browning's projection.

"Such a projection, especially at the predicted 50-50 chance level, implies a level of detailed knowledge that simply does not exist for the New Madrid or any other fault zone in the world," the group said in its reports for the National Earthquake Prediction Evaluation Council.

Mr. Browning bases his projections on the forces of tides and gravity. He has said that for 48 hours before and after Dec. 3, these forces will be particularly strong.

"Browning's correlation of earthquake activity with danger periods at times of highs in tidal forces does no better at predicting earthquakes of magnitudes greater than 6.5 than does random guessing," the scientists' report said.

The New Madrid Fault runs from Marker Tree, AR, across southeastern Missouri to southern Illinois, and produces hundreds of small quakes every year, most hardly felt. It is named for the Missouri town of New Madrid, about 140 miles south of St. Louis.

In 1811-1812, a series of quakes estimated at up to 8 on the Richter scale of ground motion struck the New Madrid region, causing the Mississippi River to appear to flow backward and ringing church bells in Washington, DC.

Southeast Missourian, Cape Girardeau, MO, Dec. 3, 1990

'Circus' comes to New Madrid: Projection puts town in spotlight

by David Hente, Staff Writer

NEW MADRID—For the past several months, tiny New Madrid has been the focus of growing national and international attention. On Sunday, the media circus came to town.

The attention was touched off by the projection of climatologist Iben Browning that a major earthquake could occur along the geological fault named after the town.

Residents of New Madrid and others who live along the fault will learn today if Dr. Browning's projection comes to pass.

New Madrid, population 3,204, is located at the head of a large bend in the Mississippi River, in the Missouri boot heel.

Until recently, few people outside of this area had heard very much about New Madrid, and even fewer knew how to pronounce the name of the town correctly (New MAD-rid).

But Browning's projection caught the atten- tion of the news media, and New Madrid is now on the minds of people throughout the nation and the world.

Over the weekend, tourists, visitors, and the news media have flocked into the town.

"I've seen more tourists in the past two weeks than I had seen in the past six months," said Jean Hanner, manager of Rick's Texaco, located on Main Street a few blocks from the river.

As Dec. 3 approached, the media continued to swarm into town. By midday Sunday, more than 20 satellite transmission trucks and vans were parked along the New Madrid levee and in other parts of town. A network techni-cian said that was more than were at the Super Bowl game last year.

The four major networks, CBS, ABC, NBC, and Cable News Network, along with televi-sion stations from Atlanta, GA, Chattanooga TN, Louisville, KY, Dallas-Fort Worth, TX, Nashville, TN, Kansas City, and St. Louis were preparing to transmit live coverage Sunday and Monday via satellite. Numerous other radio stations and print media reporters were also on hand.

Research News, August 1991

The Lessons of Dr. Browning

by Richard A. Kerr

When a self-taught climatologist predicted a major quake for the Midwest, seismologists ignored him, but leaving the field to pseudoscience proved a big mistake.

BOULDER, COLORADO—Jill Stevens wanted to alert millions of Midwesterners to the earthquake threat beneath their feet. As head of the information side of the Center for Earthquake Research and Information at Memphis State University, she had been warning, with limited success, that much remained undone to protect the citizenry from rare but lethal quakes. But to the average Midwesterner, earthquake country stopped at the California border, so why worry—until the winter of 1989, when one Dr. Iben Browning came along.

A self-taught climatologist, Browning did Stevens' job for her—and more. He predicted that a catastrophic earthquake would strike the Mississippi Valley during the first week of December 1990. The media leaped on the prediction and suddenly the populace became all too aware of the threat. That might have been to the good, says Stevens, except that the prediction was scientifically groundless—and so specific and apocalyptic as to provoke near-hysteria. Stevens recalls a 6-year-old girl whose earthquake fears could not be soothed on the phone, and elderly callers to her center who worried how they would get back in their wheelchairs after the big one struck. Schools and factories closed on the target day, 3 December, and groups such as the Red Cross wasted precious funds in their efforts to calm the public.

Although ultimate responsibility for the misleading quake prediction has to rest with Browning (who died 3 weeks ago), Stevens and others who gathered here last month for the 16th Annual Hazards Research and Applications Workshop lay a healthy share of blame at the feet of a group that wanted no part of Browning or his prognostications: the scientific community. "If I have any criticism," said Lacy Suiter, director of the Tennessee Emergency Management Agency, "it's why the scientific community that had the ultimate responsibility didn't call Browning a quack early on." And it was this concern that led participants of the meeting to hope that the next time a bogus earthquake prediction surfaces—and there are sure to be more—scientists will recognize its potential for touching off a frenzy and promptly do their part to squelch it.

Approaches to Predicting Earthquakes

Attempts to predict or forecast earthquakes have been based on these approaches, among others:

1. Recognizing that seismic activity concentrates in zones of plate tectonic activity
2. Observing and recording the abnormal behavior of animals
3. Monitoring seismic activity at plate boundaries
4. Observing and recording persistent changes in the elevation of given topographic survey points
5. Locating and monitoring faults in places other than plate boundaries
6. Compiling data on the seismic history of a given area and measuring the intervals between previous quakes
7. Monitoring the changes in emission of radon (radioactive gas) from rocks by electronic monitoring of deep wells
8. Monitoring the level of the water in wells
9. Measuring variations in the magnetic field of large rock formations
10. Trenching across a fault to uncover evidence of past earthquake movement
11. Detecting strain in the rocks of the Earth's crust by geodetic surveys
12. Using creep meters (wire strands extending across a fault) to indicate stress and movement
13. Recording variations in the speed of waves in the swarms of tremors that frequently precede earthquakes
14. Talking to earthquake survivors and recording their descriptions of past quakes
15. Observing foreshocks and measuring variations in P waves
16. Placing a network of seismograph stations on the ocean floor across the continental shelf and an ocean trench
17. Monitoring selected sites in an area that has no history of major seismic activity to detect micro-earthquakes
18. Monitoring changes in the occurrence of micro-earthquakes.

5.1c MASTER PAGE

Levels of Generalization Classification Chart

Name _____ Date _____

Directions: Place the number of each item on the preceding list in the category you think is most appropriate.

5.1c MASTER PAGE

Levels of Generalization Classification Chart

Subjective Observation	Seismic Zone Analysis	Instrumentation and Measurement

Levels of Generalization Classification Chart (key)

Suggest answers
(Note that some items may belong in either of the last two categories.)

Subjective Observation	Seismic Zone Analysis	Instrumentation and Measurement
2, 14	1, 3, 6, 10, 12, 16	4, 5, 6, 7, 8, 9, 11, 12, 13, 15, 16, 17, 18

5.2

Starting Here, Starting Now

ACTIVITY ONE
LEARNING THE DRILL

RATIONALE

Students who have rehearsed what to do in the event of an earthquake are more likely to stay calm and proceed rationally than students who have not.

FOCUS QUESTIONS

If an earthquake happened here, right now, what would you do?

OBJECTIVES

Students will:

1. Describe and recognize the early signs of an earthquake.
2. Drop, cover, and hold until a quake is over.
3. Evacuate the school or other building in an orderly fashion.
4. Describe procedures for coping with various earthquake hazards.

MATERIALS

- Materials to produce sound effects (optional)
- Standard first-aid manual

PROCEDURE

Teacher Preparation

1. Choose an open area outside the school where your class would be safe in the aftermath of an earthquake. You may also want to let teachers in neighboring classrooms know that your class will be holding an earthquake and evacuation drill.

2. Review basic emergency procedures in a standard first-aid manual, such as how to apply pressure for bleeding and how to handle injured people.

VOCABULARY

Aftershock: an earthquake that follows a larger earthquake, or main shock, usually originating in the same fault zone as the main shock.

Foreshock: an earthquake that precedes a larger earthquake, or main shock, usually originating in the same fault zone as the main shock.

A. Introduction

Tell students that instead of a fire drill, they are going to have an earthquake drill. Impress them with the seriousness of this exercise; like a fire drill, it could literally save their lives. Explain that when they hear the signal *Drop, cover, and hold,* every student is to follow this procedure:

- Get under the table or desk.
- Turn away from the windows.
- Cover the back of your neck with one hand.
- Tuck your head down.
- Hold onto a leg of the table or desk, and move with it if it moves.

Reinforce the list of actions by writing one word for each action on the board and asking students to repeat the three words Drop, Cover, and Hold. Remind them that earthquake shaking typically lasts less than a minute, so they will not be uncomfortable for long.

B. Lesson Development

1. Have several students demonstrate the drop, cover, and hold drill for the class, then have students practice it all together.

2. Ask for a volunteer to describe the beginning of the earthquake, complete with sound effects, if the student chooses, and then to signal drop, cover, and hold. (Students will be familiar with earthquake sights and sounds by this time, so most of them should be prepared for this task.) Instruct the volunteer to begin talking at your signal, and to call out "Drop, cover, and hold" after just a moment or two of description.

3. When the student signals, take cover, begin counting, and count slowly up to 60. (Remember, most earthquakes last less than a minute.) Then tell students that the earthquake is over, but they must be prepare for aftershocks. Ask them to evaluate their performance.

4. If either you or the students believe the class could have done better, tell them an aftershock is beginning and repeat the procedure with a different volunteer. Emphasize the need for a quick response.

5. When you are satisfied with the students' response, tell them that the shaking has stopped and it is time to evacuate the building. Follow your normal fire drill route (or a safer route) to the outside of the building and lead the class to the spot you have chosen.

6. When everyone is gathered outside, explain to the class that they will stay there for the rest of the period. It would not be safe to go back into the building until it has been inspected. Ask students to name some hazards they might have encountered along the way if an earthquake had occurred (fallen lockers or trophy cases, fires, smoke, fumes from laboratory chemicals or broken equipment, live electrical wires). Discuss procedures for dealing with these hazards. Then brainstorm responses to some other contingencies that might develop,

TEACHING CLUES AND CUES

Most moderate-to-large earthquakes are followed, within the ensuing hours, days, and months, by numerous smaller earthquakes (aftershocks) in the same vicinity.

indoors or out. Ask students what they would do if.

- their normal evacuation route is blocked by wreckage? (Take time now to plan an alternate route with the class and be sure that everyone understands it.)
- an aftershock occurs while they are outside or en route? (drop and cover)
- a student or teacher is injured and can't walk? (Don't try to move the person unless there is immediate danger of fire or flooding. Instead, cover him or her with a sturdy table or whatever is available and send someone for medical help after the earthquake shaking stops.)
- someone is cut by shattered glass and is bleeding severely? (Apply pressure to stop the bleeding.)
- someone is hit by a falling lamp or brick? (If the person is conscious and able to walk, take him or her to a first-aid station as soon as possible. Even if the person appears to be unhurt, assign someone to stay close and watch for signs of dizziness or nausea.)

7. If any time remains in the class period, use it to review first-aid procedures and listen to the students' feelings about the possibility of an earthquake or other natural disaster. Better yet, arrange for the school nurse or a Red Cross trainer to present this information.

C. Conclusion

The next day, back in the classroom, ask students to name some of the other places they might be when an earthquake occurs, and suggest safety procedures for each situation. Answers might include:

- Outdoors (Find an open place away from trees, buildings, power lines, and other structures. Kneel or sit until the shaking passes.)
- In a car (Stop as soon as possible, ideally in a level place away from buildings, power lines, bridges, and highway overpasses and underpasses. Passengers should stay in the car and hold on to doors and seats. The vehicle's shock absorbers may cushion some of the shaking.)
- On the bus or subway (Stay calm and follow instructions from the driver or conductor.)
- In an open mall, a gymnasium, or other, indoor place with no shelter (Move to an inside wall. Kneel next to the wall, facing away from windows. Bend head close to knees, cover sides of head with elbows, and clasp hands behind the neck. If you are carrying a coat, a notebook, a package, or even a towel, hold it over your head for protection from debris or flying glass.)

Conclude with time for questions and discussion.

TEACHING CLUES AND CUES

This simulation may arouse feelings of fear or anxiety for some students. Encourage students to express their feelings freely and to be supportive of each other's feelings. Emphasize that these reactions are normal and healthy, but that learning how to avoid injury will increase their chances of survival and those of everyone around them. Be aware that inappropriate optimism ("It can't happen to me") is just as unrealistic as extreme fear and anxiety.

Do not excuse students with special needs from participating in earthquake drills. It may not be possible for students with impaired mobility to get under a desk or table. They can, however, learn to react quickly and turn away from windows, move away from light fixtures and unsecured bookcases, and use their arms or whatever is handy to protect their heads. Encourage other students to plan procedures to assist them with immediate protection and evacuation.

ADAPTATIONS AND EXTENSIONS

1. Some students may enjoy making an audiotape to use in step 2 of Lesson Development, above.

2. Encourage students to take classes in first aid and cardiopulmonary resuscitation (CPR) from the Red Cross or other community organization, and to update training they already have. If a number of students are interested, arrange for a trainer to visit your class or provide presentations for the entire school. Students will gain confidence as well as competence.

3. Invite the school's health instructor or a representative from the Red Cross or other emergency agency to participate in the earthquake drill.

4. Invite the class to join you in setting up a schoolwide earthquake drill. Invite the school administration and local emergency services officials with whom you established contact in Unit 1.

5. If you repeat this drill in Unit 6 as part of the community earthquake simulation, vary it by putting up signs at one point along the evacuation route to indicate that the route is blocked. Lead the class out by the alternate route you planned in step 6, above.

ACTIVITY TWO

RVS AT YOUR ADDRESS: RAPID VISUAL SCREENING OF SCHOOL AND HOME FOR EARTHQUAKE HAZARDS

RATIONALE

Every teacher wants the classroom to be a safe environment for students. In this activity, you and your students will assess the safety of your classroom and make plans to remedy any earthquake hazards. Students will also assess their own homes.

FOCUS QUESTIONS

Can you imagine what your classroom would be like during an earthquake?

How could you make your classroom and your school a safer place to be?

How could you make your home safer?

OBJECTIVES

Students will:

1. Distinguish between structural and nonstructural features of a building.

2. Recognize nonstructural earthquake hazards in the classroom.

3. Develop a rapid visual screening format to use in their homes.

4. Devise methods to reduce earthquake hazards in school and at home.

VOCABULARY

Hazard: an object or situation that holds the possibility of injury or damage.

Nonstructural feature: an element of a building that is not essential to its structural design and does not contribute structural strength. Examples are windows, cornices, and parapets.

Rapid visual screening (RVS): a method of assessing risk that relies on external observation. An observer who is trained in RVS can derive enough information from a quick visual assessment to know if closer examination is necessary.

Retrofitting: making changes to a completed structure to meet needs that were not considered at the time it was build; in this case, to make it better able to withstand an earthquake.

MATERIALS

- Paper and pencils or pens
- Chalkboard and chalk or overhead projector and markers
- Student copies of Master 5.2a, RVS Checklist for the Classroom, one for each small group
- Student copies of master 5.2b, RVS Checklist for the Home

PROCEDURE

Teacher Preparation

Write a brief letter telling parents that you are teaching a unit on earthquakes and encouraging their participation in a rapid visual screening of their home.

Using the checklist on Master 5.2a, look around your classroom and note any items that could harm you and your students if an earthquake suddenly started to shake the room. Do not make any changes at this time unless you see a situation that needs immediate correction.

A. Introduction

1. Place several books on a desk. Have a student come up to the front of the room and shake the desk. Ask students to describe what they observed.

2. Remind students that in earlier lessons they have demonstrated the importance of structural features in increasing building safety. Ask them to name some structural features. (girders, beams, floors, load-bearing walls, columns, foundations)

3. Ask: Are these the only features of buildings that are affected by an earthquake? Explain that nonstructural features—outside brick walls that don't bear weight, decorative overhangs, and panels added after construction; and inside cabinets, bookshelves, desktop computers, laboratory equipment, hanging light fixtures, wall decorations, aquariums, potted plants, and windows—can also injure people and damage property if they are not properly fastened to survive a strong earthquake.

B. Lesson Development

1. Ask students to quickly scan the classroom and each write down the name of at least one object or nonstructural feature that could be a hazard during earthquake shaking. Tell them they have just completed a rapid visual screening, or RVS.

2. On the chalkboard or overhead projector, compile a list of the items students noted. Build a class discussion around the observations, asking students to specify why they considered particular items hazardous.

3. Divide students into small groups and distribute copies of Master 5.2a, RVS Checklist for the Classroom. Give students about 10 minutes to complete the checklist. When they have finished, ask: Did

TEACHING CLUES AND CUES

If students made a shaking table in Unit 4, have volunteers demonstrate on the shaking table instead.

the list suggest any items we overlooked in our own assessment? If so, add these items to the class list.

4. Ask students to share the methods they proposed to make the classroom safer during an earthquake. Many will be as simple as relocating or removing furnishings. Others may require tie downs, anchors, or fasteners to hold them in place during the shaking.

Help the class reach consensus on a short list of changes to improve their own classroom for earthquake safety.

5. Give students class time to develop an RVS checklist for their homes, based on their own screening of the classroom and Master 5.2b. Assign students to screen their homes, with the cooperation of their families, and write brief reports of their findings, including suggestions for what they could do to make their homes safer during an earthquake.

C. Conclusion

Let colleagues know that your students are available to do hazard screenings of other classrooms. Assign teams of students to screen the classrooms of any interested teachers and develop plans to retrofit those classrooms for earthquake safety.

ADAPTATIONS AND EXTENSIONS

1. Encourage your students to present their data, analysis, and suggestions for retrofitting to the school's principal, staff, or parent teacher organization and to their families. Both in school and at home, students may volunteer to do all or some of the work.

2. Invite interested students to develop a one-minute radio or television spot to inform their community about rapid visual screening. ▲

RVS ✓list for the Classroom

Name _____ Date _____

Instructions

1. Check yes or no for each of the following items. Skip any items that are not applicable to your classroom.
2. Go back and circle all the nos. These are the items that you have identified as potentially dangerous to you and your classmates.
3. For each no, suggest a way to remove the danger. (Use the *comments* space.)
4. For each yes, explain why your team thinks the feature is earthquake resistant.

Yes	No	
❑	❑	Are desks and tables located where they cannot slide and block exits? comments:
❑	❑	Are large, heavy office machines secured to the wall or floor and located where they cannot slide, fall, or, block exits? comments:
❑	❑	Are the tops of tall (4- or 5-drawer) file cabinets securely attached to the wall? comments:
❑	❑	Do file cabinet doors have latches? comments:
❑	❑	Are desktop computers securely fastened to work spaces? comments:
❑	❑	Are bookshelves, cabinets, and coat closets secured to the wall and/or attached to each other? comments:
❑	❑	Are display cases or aquariums protected against overturning or sliding off tables? comments:
❑	❑	Is floor-supported, freestanding shop equipment secured against overturning or sliding? comments:
❑	❑	Is freestanding equipment on wheels protected against rolling? comments:

Yes	No	
❑	❑	Are all wall-mounted objects that weigh more than five pounds firmly anchored to the building's structural framing? comments:
❑	❑	Are all heavy, sharp, or breakable wall decorations securely mounted, with closed-eye hooks, for example? comments:
❑	❑	Do books or materials stored on shelves have adequate restraints to keep them from flying off the shelves? comments:
❑	❑	Are laboratory chemicals on shelves restrained? Are potentially hazardous chemicals stored securely? Are chemical storage areas vented, and located away from exits and corridors? Is there an up-to-date inventory of all chemicals stored? comments:
❑	❑	Are the fluorescent light fixtures merely resting on the hung ceiling grid, or do they have other supports? comments:
❑	❑	Are decorative ceiling panels or latticework securely attached? comments:
❑	❑	Will hanging light fixtures swing freely without hitting each other if allowed to swing a minimum of 45 degrees? comments:
❑	❑	Are fire extinguishers securely mounted? comments:
❑	❑	If there are potted plants and other heavy items on top of file cabinets or in other overhead locations, are they restrained? comments:
❑	❑	Do you see other hazards not included on this list? Specify. comments:

RVS ✓list for the Home

Name _____ Date _____

- ❑ 1. Place beds so that they are not next to large windows.
- ❑ 2. Place beds so that they are not below hanging lights.
- ❑ 3. Place beds so that they are not below heavy mirrors.
- ❑ 4. Place beds so that they are not below framed pictures.
- ❑ 5. Place beds so that they are not below shelves with objects that can fall.
- ❑ 6. Replace heavy lamps on bed tables with light, nonbreakable lamps.
- ❑ 7. Change hanging plants from heavy pots into lighter pots.
- ❑ 8. Use closed hooks on hanging plants, lamps, etc.
- ❑ 9. Make sure hooks for hanging plants, lamps, etc. are attached to studs.
- ❑ 10. Remove all heavy objects from high shelves.
- ❑ 11. Remove all breakable things from high shelves.
- ❑ 12. Replace latches, such as magnetic touch latches on cabinets, with latches that will hold during an earthquake.
- ❑ 13. Take glass bottles out of medicine cabinets and put on lower shelves. (PARENT NOTE: If there are small children around, make sure you use childproof latches when you move things to lower shelves.)
- ❑ 14. Remove glass containers that are around the bathtub.
- ❑ 15. Move materials that can easily catch fire so they are not close to heat sources.
- ❑ 16. Strap water heater to the studs of the nearest wall.*
- ❑ 17. Move heavy objects away from exit routes in your house.
- ❑ 18. Block wheeled objects so they cannot roll.
- ❑ 19. Attach tall heavy furniture, such as bookshelves, to studs in walls.
- ❑ 20. Use flexible connectors where gas lines meet appliances such as stoves, water heaters, and dryers.
- ❑ 21. Attach heavy appliances such as refrigerators to studs in walls.
- ❑ 22. Nail plywood to ceiling joists to protect people from chimney bricks that could fall through the ceiling.
- ❑ 23. Make sure heavy mirrors are well fastened to walls.
- ❑ 24. Make sure heavy pictures are well fastened to walls.
- ❑ 25. Make sure air conditioners are well braced.
- ❑ 26. Make sure all roof tiles are secure.
- ❑ 27. Brace outside chimney.
- ❑ 28. Bolt house to the foundation.*
- ❑ 29. Remove dead or diseased tree limbs that could fall on the house.
- ❑ 30. Install plywood reinforcements.*

** See Master 5.3c, Strengthening Your Wood Frame House, for materials and instructions.*

5.3

Find and Fix the Hazards

(Wood Frame Homes)

RATIONALE

Relatively simple modifications can greatly increase the safety of a wood frame house. Even students who do not currently live in such houses may at some future time.

FOCUS QUESTIONS

What are some structural earthquake hazards in a typical wood frame home?

What can be done to reduce structural hazards in these homes?

OBJECTIVES

Students will:

1. Assess risk factors in an existing wood frame house.
2. Name several ways to strengthen an existing wood frame construction.

MATERIALS

- Classroom map of the local area, from Unit 1
- Master 2.5b, Soil and Geologic Maps and Map Sources (*optional*)
- Student copies of Master 5.3a, Structural Checklist
- Student copies of Master 5.b, Wood Stud Frame Construction
- Flashlights
- Goggles or other eye protection
- Head protection (helmet or hard hat)
- Clip board, paper, and pencil for notes
- Knee pads (*optional*)
- Student copies of Master 5.3c, Strengthening Your Wood Frame House

TEACHING CLUES AND CUES

If possible, prepare your students for this activity and the others in this lesson, then conduct one field trip that combines several of the activities.

This activity emphasizes wood frame houses because they are common single-family dwellings in many parts of the country. If you are not teaching all the lessons in this unit, be sure students understand that other types of structures also pose serious hazards.

PROCEDURE

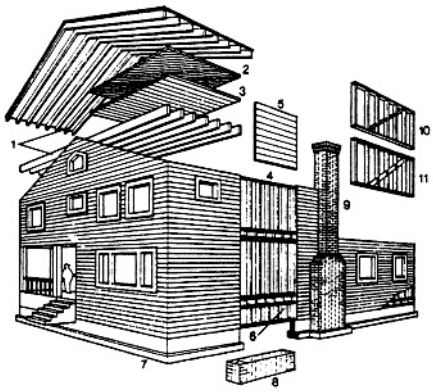

Teacher Preparation
Contact a local realtor to find a nearby wood frame house that students can visit to conduct their assessment, or arrange with a contractor to visit a building site. If no vacant home is available, plan to use your own home or that of a friend or colleague. Arrange for transportation and permissions as necessary.

A. Introduction
Survey the class, asking: How many students live in wood frame houses? How many have friends or relatives who live in wood frame houses? How many have lived in such houses at some point in their lives? (Be sure students understand that the frame of the house may be wood even if the outside sheathing is stucco, decorative brick, brick veneer, stone, or some other material.) Record a count of student answers on the board.

Tell the class that many homes in regions across the country are constructed of wood frame systems. These wooden structures are lightweight and flexible, and properly nailed joints are excellent for releasing earthquake energy and resisting ground shaking. Nevertheless, frame houses are sometimes damaged by an earthquake, causing a great deal of unnecessary trouble and expense for homeowners. This damage is unnecessary because most often it could have been prevented by some very basic alterations. It pays to find out if your home needs rehabilitation or strengthening and what can be done to lessen the earthquake hazard.

B. Lesson Development
1. Tell students that they are going to play the role of potential home buyers. Each of them has just landed a new job at a higher salary, and has decided to buy a new wood frame house. First, however, they must conduct a visual inspection of each home they consider buying to identify potential earthquake hazards. In this lesson they will learn what to look for in the foundation and other structural components.

2. Ask: What seismic hazard designation has been applied to the area where we live? (In Unit 3, Lesson 3, you noted this information on the classroom local map. It is also available on Master 1.3b, U.S. Earthquake Hazard Map.) Explain that the degree of earthquake risk in any structure depends on where it is located as well as how it is built. If your school is located in a region identified on Master 1.3b as one of low seismic hazard, however, remind students that this map depicts what has happened; it does not predict what *may* happen. Earthquakes can occur anywhere in the world. Moreover, most Americans move several times in the course of their lives.

3. If you did Lesson 2.5, students will also know the soil characteristics of their own region. If this information is not on your classroom map, refer students to local maps of soil characteristics, and

ask them to characterize the soil of the site they will be visiting. (See Master 2.5b, Soil and Geologic Maps and Map Sources.) Emphasize again that the site and the mode of construction interact.

4. Distribute copies of Master 5.3a, Structural Checklist, and Master 5.3b, Wood Stud Frame Construction. Point out the numbered areas on the drawing, and tell students that these are among the things they will be inspecting on their field trip.

5. Travel with your class to the site you have chosen. Direct pairs or small groups of students to conduct inspections. When one group has finished, those students can complete their worksheets while the others proceed.

C. Conclusion

If you are in a moderate- or high-risk area, and your students find that their own homes could be reinforced to better withstand an earthquake, distribute copies of Master 5.3c, Strengthening Your Wood Frame House. Assign students to take home these simple directions for four inexpensive projects. High school students and their parents can follow the steps on these pages to reinforce their wood frame homes.

ADAPTATIONS AND EXTENSIONS

If a majority of your students live in wood frame houses, you may assign this activity as an out-of-class exercise. Cover the information in the introduction with the whole class, then hand out copies of Master 5.3a, Structural Checklist. Ask students to assess the stability of their own homes and complete a report to share with their families and/or their classmates. Have students check on local building laws or talk to the city building inspector. Invite the building inspector to visit your class and talk about local building codes. ▲

Note: *Master 5.3c, Strengthening Your Wood Frame House, is adapted from* An Ounce of Prevention: Strengthening Your Wood Frame House for Earthquake Safety, *with permission from the Bay Area Regional Earthquake Preparedness Project, 101 8th Street, Room 152, Oakland, CA 94607.*

TEACHING CLUES AND CUES

Engineers and architects are the people best qualified to assess the strength of structures and their resistance to earthquakes. If your students have serious concerns, encourage them to discuss with their parents the possibility of bringing in a professional. Even the first modification on Master 5.3c is best undertaken after structural analysis, especially an analysis of foundation soils.

Structural ✓list

Name _____ Date _____

Instructions. Rate each component listed on a scale from 1 (good) to 5 (poor).

1. The foundation must react as one unit for maximum earthquake resistance. The best foundations are steel-reinforced concrete that reach down to bedrock. Examine the foundation.
   - Is it wood, brick, or concrete?
   - Is there any sign of steel reinforcement?
   - Are there holes or pits in the foundation?
   - Is the concrete powdery or crumbly?
   - Are there signs of water damage?
   - Are there visible cracks longer than 1 cm?

Rating (Circle one): 1 2 3 4 5

2. The wood plate (also known as a sill plate or a mudsill). This is the first structural wooden member placed on the foundation. Examine the wood plate.
   - Is it bolted to the foundation?
   - How far apart are the bolts? (The standard spacing is about four feet apart.)
   - Is the wood plate fasten or reinforced with metal plates?

Rating (Circle one): 1 2 3 4 5

3. Short stud walls (cripple walls)
   - Are they made of wood, brick, or another material?
   - Are they braced to resist earthquake-generated lateral forces?
   - Are they connected to the wood plates?
   - How is the floor frame fastened to the stud wall?

Rating (Circle one): 1 2 3 4 5

4. Exterior walls (shear walls)
   - What are the exterior walls made of? (brick, block, wood siding?)
   - Are they tied together?
   - If the walls are brick, block, or stone, what is the condition of the mortar?
   - Are they braced to resist earthquake-generated lateral forces?

Rating (Circle one): 1 2 3 4 5

5. Masonry fireplace chimneys. An unreinforced brick chimney is the weakest part of a house when earthquake shaking begins.
   - Does the house have one or more chimneys?
   - Is each chimney's foundation part of the house?
   - What are the chimneys made of?
   - Are they reinforced and designed to be earthquake resistant?

Rating (Circle one): 1 2 3 4 5

6. Utilities and their mountings
   - Is the gas main mounted on flexible pipes?
   - Is the electrical service firmly mounted?
   - Is the main water shutoff accessible?

Rating (Circle one): 1 2 3 4 5

7. Exterior porches
   - Does the house have one or more porches?
   - Is the porch or porches attached to the house? How?
   - Is the foundation of the porch attached to the foundation of the house?

Rating (Circle one): 1 2 3 4 5

8. Make specific recommendations on how to correct any seismic deficiencies identified.

Wood Stud Frame Construction

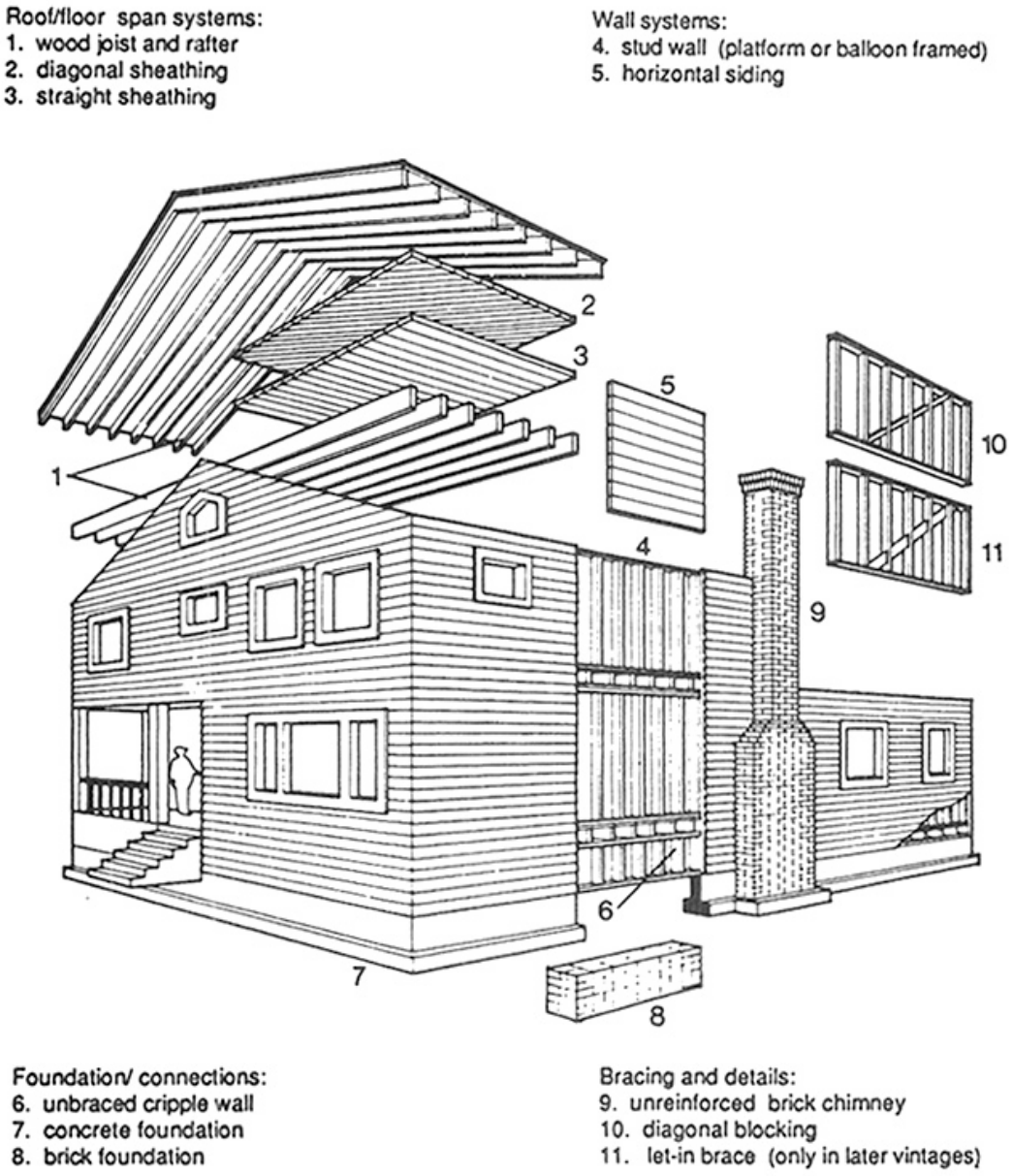

Figure 2-7 Wood stud frame construction

Reproduced from Rapid Visual Screening of Buildings for Potential Seismic Hazards: A Handbook, *FEMA Earthquake Hazard Reduction Series 41.*

adapted with permission of the Bay Area Regional Earthquake Preparedness Project

Step 1: *Steel Plate Bolting*

Materials and Tools Needed

- 1 cm (1/2 in.) diameter expansion bolts of a style acceptable to the local building department. Length of bolt determined by depth of hole, thickness of sill plate, and a projection of not less than 2.5 cm (1 in.) above sill plate
- Masonry drill bit with carbide tip. Size determined by size and style of expansion bolt.
- Electric rotary impact drill or heavy-duty drill
- Short-handled sledge hammer or carpenter's hammer for setting the bolts.
- 1 cm (3/8 in.) diameter plastic tubing
- Adjustable crescent wrench
- Chalk or lumber crayon
- Measuring tape
- Eye protection
- Noise protection
- Dust mask

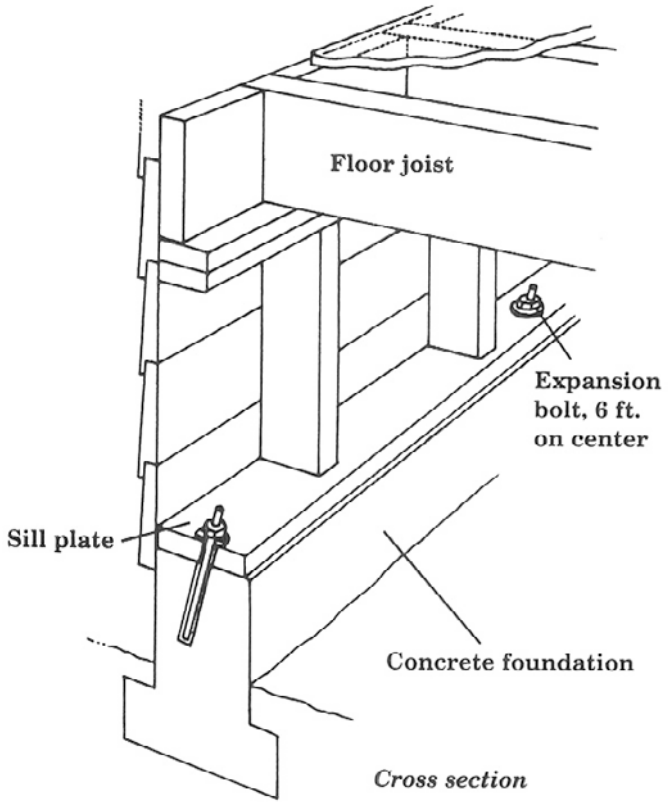

Installation Instructions for Step 1

1. Lay out bolt locations. Bolts should be spaced at not more than 2 m (6 ft) apart. Begin layout at not less than 10 cm (4 in.) or more than 30 cm (12 in.) from the end of any section of sill plate.

2. Drill holes through the sill plate and into the foundation with a carbide drill bit of the size recommended for the style of expansion bolt used. Drill holes a minimum of 11.5 cm (4.5 in.) into foundation wall.

3. After drilling a hole, clean out the concrete dust by inserting the plastic tubing into the hole and blowing out the dust.

4. Place a cut washer over the bolt so it rests on top of the sill plate. Place the nut on the bolt and turn until the top of the nut is even with the top of the bolt. Insert expansion bolt into the hole until it stops. Using the sledge hammer or carpenter's hammer, strike the top of the hole.

5. Using a crescent wrench, tighten the nut until the sill plate begins to crush under the washer.

Step 2: *Install Blocking at Sill Plate*

Note: This blocking is necessary only when the depth of the studs is different from the width of the sill plate, such as 2 x 4 studs attached to a 2 x 6 sill. If the stud depth and the sill plate width are the same, skip this step.

Materials and Tools Needed

- Nominal 5 cm (2 in.) thick lumber (actually 4 cm, or 1.5 in. thick) the same depth as the studs
- 16d (16-penny) common nails
- Electric drill to pre-drill holes for nails, if necessary
- 0.2 cm (1/16 in.) diameter drill bits for pre-drilling nail holes and a bit at least 0.2 cm (1/16 in.) larger than the diameter (point-to-point distance across) of the anchor bolt nut
- Carpenter's hammer
- Measuring tape
- Pencil
- Eye protection
- Dust mask

Installation Instructions for Step 2

1. Measure distance between studs.
2. Cut pieces of blocking from 5 cm (2 in.) thick piece of lumber, the same depth as the studs, equal to the distance between studs, that the blocking fits snugly.
3. In those stud spaces, where a new anchor bolt has been installed, mark the bolt location on the bottom of the blocking and drill a hole large enough that the blocking fits over the bolt and rests fully on the sill plate.
4. Nail the blocking to the sill plate with between 3 and 6 16d nails. If blocking begins to split while the nail is driven, remove the nail and drill pilot holes for each nail with the 0.2 cm (1/16 in.) diameter drill bit.

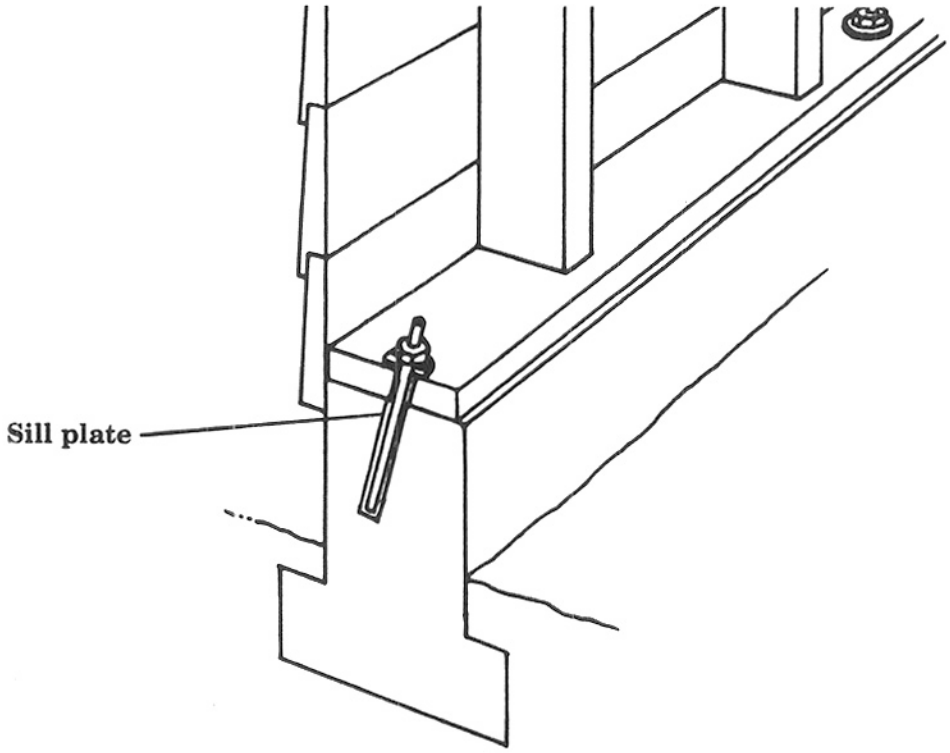

Step 3: *Install Plywood*

Materials and Tools Needed

- 1 cm (3/8 in.) or 1.2 cm (15/32 in.) thick plywood of Structural 1 of CDX grade
- Nominal 5 cm (2 in.) thick lumber (actually 4 cm or 1.5 in. thick) the same depth as the studs. This will be used for blocking, if required.

Note: The size of access to the average crawl space frequently doesn't allow large pieces of plywood. You may need to use two or more smaller pieces of plywood. When multiple pieces are used to cover the height of the wall, blocking must be installed at the joint and completely nailed. If a single piece of plywood can be installed the full height of the reinforcing wall, blocking will not be necessary.

- 8d common nails for use with 1 cm (3/8 in.) plywood
- 10d common nails for use with 1.2 cm (15/32 in.) plywood
- 16d common nails for use with blocking, if required
- Electric circular saw
- Electric drill
- 0.2 cm (1/16 in.) diameter drill bit for pre-drilling nail holes if blocking is required
- Nail gun or carpenter's hammer
- Measuring tape
- Chalk, lumber crayon or pencil
- 4 cm to 5 cm (1.5 in. to 2 in.) diameter hole saw

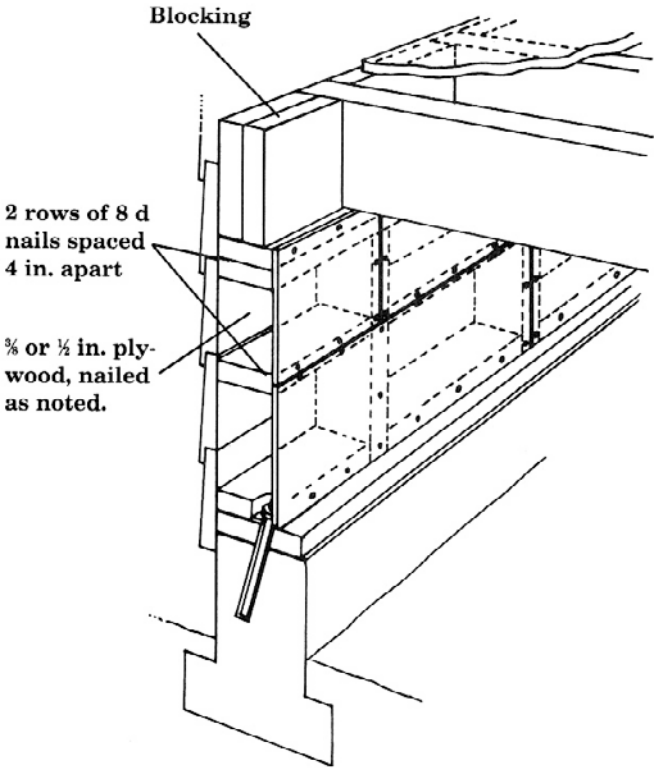

Intermediate blocking (toe-nail with two 16d nails at each end into studs)

Installation Instructions for Step 3

1. If access to the crawl space under the house is such that full-width sheets, or sheets cut to the height of the cripple studs, will not fit, cut plywood sheets lengthwise to a width not less than 46 cm (18 in.).

2. If sheets need to be cut, blocking will be necessary. Cut the 5 cm (2 in.) nominal thickness lumber to fit snugly between the studs. Nail each block to the studs with 2 16d nails at each end. Nails should be driven into the side of the stud. Pre-drilling for the nails will make this operation easier. Blocking should be installed at the same height for the full length of the plywood sheet.

3. Starting at a comer, measure across the studs to find a stud where the sheets of plywood can butt. In order to do this, find the stud closest to, but not less than 1.2 m (4' ft.) or closest to, but not more than 2.4 m (8 ft.) from the corner. Measure the location of all ventilation vents and cut out holes in the plywood to match the vents.

4. Mark the location of each stud at the top plate and on the foundation wall with chalk or lumber crayon.

5. After cutting the plywood to fit, lay it up against the studs and hammer a nail in each comer of the plywood to hold it in place. Using a nail gun, or a carpenter's hammer, place a nail every 10 cm (4 in.) around the perimeter of the plywood sheet. Then place a nail every 15 cm (6 in.) along each stud. Use the nails appropriate for the thickness of the plywood.

6. Once the plywood has been fully nailed, drill a 4 cm to 5 cm (1.5 in. to 2 in.) diameter hole above and below the blocking.

Step 4: *Strap Water Heater*

Materials and Tools Needed

- Two 1.8 m (6 ft.) lengths of 4 cm (1.5 in.) gauge pre-drilled strap
- One 3.1 m (10 ft.) length of 1 cm (.5 in.) EMT tube (conduit)
- Four 1 cm x 7.5 cm (5/16 in. x 3 in.) lag screws with washers
- Two 1 cm x 2 cm (5/16 in. x 3/4 in.) hex head machine bolts with 1 nut and 2 washers each
- Two 1 cm x 3 cm (5/16 in. x 1-1/4 in.) hex head machine bolts with 1 nut and 2 washers each
- Electric drill
- Tape measure
- Hammer
- Hacksaw
- Crescent wrench
- Vise or clamp
- Power drill
- 1 cm (3/8 in.) drill bit
- Center punch

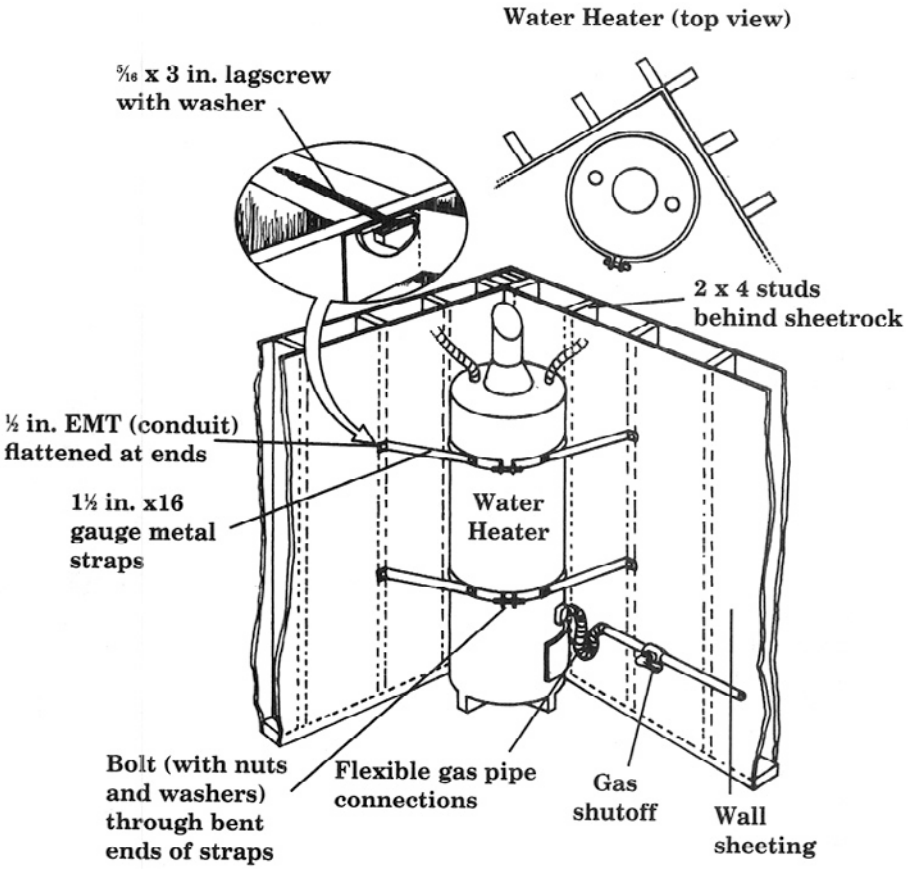

Installation Instructions for Step 4

1. Mark water heater at 15 cm (6 in.) from top and about 46 cm (18 in.) up from bottom. Transfer these marks to the wall. Locate the studs in the wall on both sides of the water heater.

2. Drill a 0.5 cm (3/16 in.) hole 7.5 cm (3 in.) deep through the wall sheathing and into the center of the wood studs at the four marks made in step 1.

3. Measure around the water heater and add 7.5 cm (3 in.) to the measurement. Using a hacksaw, cut the two 4 cm (1.5 in.) 16-gauge metal straps to this length for encompassing water heater.

4. Mark 4 cm (1.5 in.) from each end of metal straps, insert them in a vise, and bend the ends outward to approximately a right angle. Bend the straps into a curve.

5. Measure the distance from a point midway on each side of the water heater to the hole drilled in the wan (probably two different lengths). Add 4 cm (1.5 in.) to these measurements. Using a hacksaw, cut two pieces of tube to each of these two lengths.

6. Using a hammer, flatten approximately 4 cm (1.5 in.) at each end of the four pieces of tubing by laying the tube on a flat metal or concrete surface and striking with the hammer. Be sure you flatten both ends on the same plane.

7. Insert the flattened ends of the tubes, one at a time, into a vise or clamp. With the hammer and center punch make a mark 2 cm (3/4") from each end at the center of the flattened area of the tube. Drill 1 cm (3/8 in.) holes in each end of all four tubes (8 holes). Be sure tubes are clamped down while drilling. Bend each end to about 45 degrees.

8. Wrap the straps around the heater and insert a 1 cm x 3 cm (5.16 in. x 1.25 in.) bolt with washers into the bent ends. Tighten nuts with fingers. Insert 1 cm x 2 cm (5/16 in. x 3/4 in.) bolts through straps from the inside at the mid-point on each tube strut and insert on hole in the wall stud. You may need to tap the lag screw gently into the hole to start it, then tighten with crescent wrench.

9. Adjust the straps to the proper height and tighten nuts snugly. If the nuts are too tight, the straps could tilt the heater.

Note: *Flexible gas and water supply lines to the water heater will greatly reduce the danger of water pipe leaks and fire or explosion from a gas leak after an earthquake. If your water heater does not have a flexible gas line, contact a licensed plumber to install one. These instructions are for a 30 to 40 gallon water heater within 30.5 cm (12 in.) of a stud wall.*

5.4

Rapid Visual Screening (RVS) in the Community

RATIONALE

Students will perform an informal RVS (rapid visual screening) to determine the nonstructural hazards to people and property that could be caused by buildings in their community during an earthquake.

FOCUS QUESTIONS

What buildings in my town or city might pose a serious risk of casualties, property damage, and/or severe curtailment of public services, if a damaging earthquake happened here?

OBJECTIVES

Students will:

1. Conduct a sidewalk survey of nonstructural building hazards in their community.
2. Record their observations on data collection forms.

MATERIALS

- Transparency from Master 1.3b, U.S. Earthquake Hazard Map
- Classroom wall map of your own region which includes seismic hazard designations. This may have been prepared in Unit 1.
- Overhead projector (optional)
- Transparency made from Master 5.4a, Nonstructural Hazards
- Student copies of Master 5.4a, Nonstructural Hazards
- Student copies of Master 5.4b, RVS Observation Sheet, six for each team
- Clipboard for holding observation sheets and drawing paper
- Pens or pencils
- Blank drawing paper
- Straightedge or ruler for drawing sketches

VOCABULARY

Canopy: a covered area that extends from the wall of a building, protecting an entrance.

Cantilever: a beam, girder, or other structural member which projects beyond its supporting wall or column.

Cladding: an external covering or skin applied to a structure for aesthetic or protective purposes.

Cornice: the exterior trim of a structure at the meeting of the roof and wall.

Glazing: glass surface.

Masonry veneer: a masonry (stone or brick) facing laid against a wall and not structurally bonded to the wall.

Parapet: part of a wall which is entirely above the roof.

Portico: a porch or covered walk consisting of a roof supported by columns.

Veneer: an outside wall facing of brick, stone, or other facing materials that provides a decorative surface but is not load-bearing.

- Camera, preferably instant (*optional;* if available, replaces sketches)
- Tape or stapler, for affixing photo (*optional*)
- Red marking pen

PROCEDURE

Teacher Preparation

Select site(s) for the class field assignments, choosing the nearest large concentration of buildings. Students may choose buildings to survey or they may be assigned.

A. Introduction

Tell students that they are going to assume the role of building inspectors in completing an informal sidewalk survey of buildings in their community.

B. Lesson Development

1. Ask students whether their region of the country is thought to be at low, moderate, or high risk for earthquakes. If you do not have this information on your classroom map, project the transparency made from Master 1.3b, U.S. Earthquake Hazard Map. If your school is located in a region pictured on the map as one low seismic hazard, remind students that they may not always live where they live now, and other natural disasters may affect the buildings.

2. Tell students that a building may be structurally sound but its exterior decorations may create a hazard. These are called nonstructural hazards. Project the transparency made from Master 5.4a, Non-structural Hazards, and elicit student descriptions of nonstructural hazards on the outside of buildings in the drawing.

3. Tell students that for the purpose of this exercise, they will assume that a major earthquake is likely in their area in the next several years. They will take a walk and record their observations of nonstructural hazards.

4. Assign each student a partner. Distribute six copies of Master 5.4b, RVS Observation Sheet, to each pair, and ask each pair of students to complete the following steps for six buildings, noting all the information on their observation sheets.

a. Record a description of the building and its address or location.

b. Note materials used in construction.

c. Estimate the year of its construction.

d. Record its size (number of floors, area, shape, and other information).

e. Determine the current use (business, apartments or other).

f. List the readily visible nonstructural hazards.

g. Sketch or photograph the building.

5. Back in the classroom, suggest ways for students to fill in any miss- ing information. Individuals may volunteer to call their mentors in the chamber of commerce, the local building department, or the public works department. Students could also call the firm that developed or manages a building. Then instruct all the students who filled out forms on the same building to compare their data and discuss any discrepancies. The goal of this process should be an assessment of each building surveyed that represents the students' best consensus.

C. Conclusion

On the classroom local map you started in Unit 1, use a red marker to circle any block or group of blocks where concentrated nonstructural damage could be expected in the event of an earthquake. Open a class discussion of what students have learned. If students have not already expressed an opinion, ask if the sidewalks they traveled would be safe places to be during an earthquake. Generally, the most dangerous place to be is at building exits and directly adjacent to buildings (on the sidewalks, for example).

ADAPTATIONS AND EXTENSIONS

1. If a structural engineer is present or structural information is available from the building manager, students may also informally judge which buildings could be expected to withstand heavy earthquake shaking.

2. If structural information is available from the building manager, students may also list the type of building construction used (wood, steel, masonry, cement, or other building materials.) ▲

Nonstructural Hazards

Name _____ Date _____

Nonstructural Hazards (key)

Date:

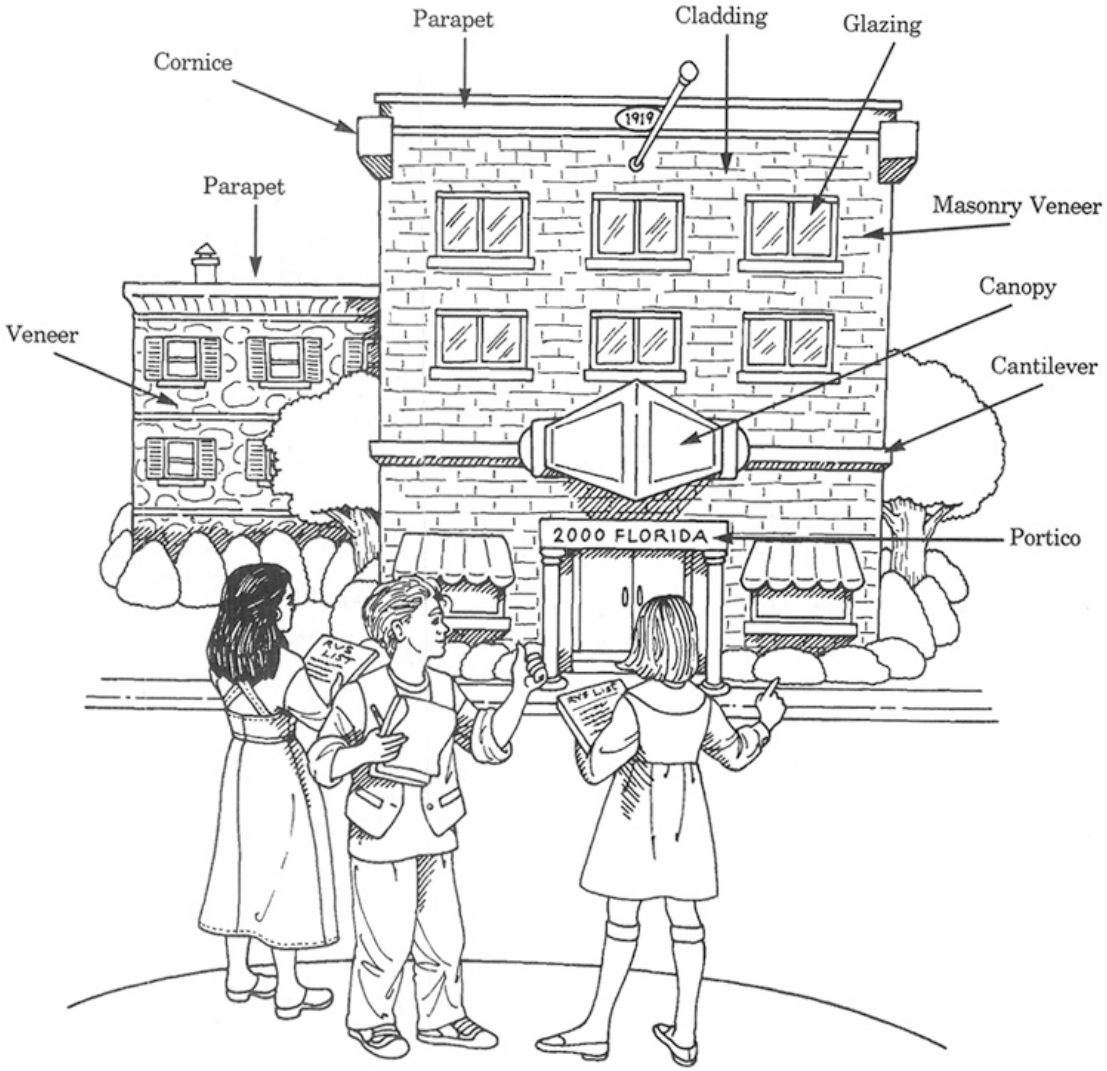

RVS Observation Sheet

Name _____ Date _____

1. Building name _____

2. Street address _____

3. Materials used in construction _____

4. Year of construction _____

5. Size (number of floors), area, and shape _____

6. Current use _____

7. List of nonstructural hazards (see Master 5.4a and vocabulary for illustrations and definitions)

a. _____

b. _____

c. _____

d. _____

e. _____

f. _____

g. _____

h. _____

i. _____

j. _____

k. _____

l. _____

m. _____

Sketch building or attach photo.

(Continue on back if necessary)

5.5

Are the Lifelines Open?

Critical Emergency Facilities and Lifeline Utility Systems

RATIONALE

How well a community recovers from a damaging earthquake depends on the survival of critical emergency facilities and major utility systems ("lifelines"). In this lesson, students resume their focus on community preparedness.

FOCUS QUESTIONS

Where are the critical emergency facilities and major lifelines in my community, and how vulnerable are they?

How would my community survive a damaging earthquake?

OBJECTIVES

Students will:

1. Name and locate the critical emergency facilities and lifelines in their community, and evaluate their sites for geological hazards.
2. Contact civic leaders, heads of emergency facilities, and public utility officials to learn about their emergency plans, or renew existing contacts.
3. Report to the class and the community on what they have learned.

MATERIALS

- Brainstorming list of survival necessities from Unit 1, Lesson 2
- Master 5.5a, Lifelines and Critical Emergency Facilities
- Back of Master 5.5a, Problem Areas
- Master 5.5b, A Chain of Disasters
- Local map(s) showing locations of major emergency facilities and lifeline systems
- Classroom local map developed in Lesson 1.3, with notes on soil conditions from Lesson 2.5
- Red marking pen
- Local telephone directories

VOCABULARY

Lifeline: a service that is vital to the life of a community. Major lifelines include transportation systems, communication systems, water supply lines, electric power lines, and petroleum or natural gas pipelines.

TEACHING CLUES AND CUES

If your students have not developed a map of your own area that contains information on fault and soil types, use the maps on Master 2.5c to show them how this kind of information is presented visually.

PROCEDURE

Teacher Preparation

Read Master 5.5a, Lifelines and Critical Emergency Facilities. Decide how you will group students for this activity. If necessary, combine categories, such as natural gas and petroleum fuels, so that together the groups cover all the areas. For each group, make one copy of the local map(s) with locations of major emergency facilities and lifeline systems. Also make one copy of a local map showing geological hazards, if your classroom map does not already have this information.

A. Introduction

Display the list of necessities for survival that students developed in Unit 1, Lesson 1. Review the list with the class and ask if they have anything to add, or if anything they included at that time now seems less than essential. When the class has reached consensus, display Master 5.5a or distribute copies. Does the list include anything students have omitted? To reinforce the connections among the many kinds of damage earthquakes can cause, display Master 5.5b, A Chain of Disasters. Have students revise their list of necessities again to incorporate anything they may have missed. Emphasize the importance of emergency facilities—such as hospitals, fire stations, and police departments—and of public utilities—such as telephone lines, electric power systems, water supply systems, and transportation into and out of the affected area.

B. Lesson Development

1. Divide the class into small groups and assign one or more of the 10 systems listed on Master 5.5a to each group. Individual student's responsibilities will reflect their mentor's areas.

2. Distribute one set of maps to each group. Instruct students to compare the lifeline maps to the classroom local map and note any geological features in their service area that might constitute a hazard. Invite them to develop their own system for indicating relative degrees of risk on the lifeline maps: coding by color, by number, or by different kinds of symbols, for example. When they have worked out a system that satisfies everyone, students can transfer this information to the classroom map.

3. Instruct students in each group to plan reports on the community's plans for surviving the first 72 hours after an earthquake. They may need to renew their contacts with key people in their assigned service areas and schedule phone interviews. Give students class time to prepare lists of questions for their interviews. Then ask each group to exchange its list with another group and critique the questions.

4. When every group's questions have been reviewed and students are satisfied that they will elicit the necessary information, ask students to make the phone calls outside of class and take notes on what they learn.

5. The next time the class meets, allow 10 minutes for students in each group to pool their information. Then invite a representative

TEACHING CLUES AND CUES

If your community is in one of the parts of the country where earthquakes have not been recorded, students can learn about preparations for other kinds of natural hazards, such as floods, hurricanes, and tornadoes. In many cases the same systems would be affected and the some kinds of preparations will have been made. Fire departments will be an excellent source of emergency information.

TEACHING CLUES AND CUES

Emphasize that every student is to make at least one phone call. Calling several people in each system will increase the amount and quality of information students receive. Students are also likely to find what they learn reassuring—for example, that local hospitals have emergency backup generators.

from each group to report to the class on how the system that group studied would operate during an emergency.

C. Conclusion

On the classroom local map, use red ink to indicate any lifelines or critical facilities that may be at high risk in the event of an earthquake or other natural disaster.

Discuss students' reactions to what they have learned. If they are pleased with the community's level of preparedness, overall or in any of the separate systems, encourage them to write letters of congratulation to the appropriate officials or to the newspaper. If they are concerned that preparation seems inadequate, or if they have concerns about siting and geological hazards, they may write letters expressing their concern and recommending improvements.

Direct students to put their notes from this activity away in a safe place. They will need this information again in the Unit 6 role-playing activity.

ADAPTATIONS AND EXTENSIONS

1. If you know that your area is one of low seismicity, try to locate flooding maps, erosion maps, or maps of other types that are particularly relevant to your area. Have students learn about 100-year floods, the effect of windstorms over time, or other hazards that are specific to your community.

2. Provide maps of the state or the region surrounding your local area. Challenge students to identify alternate emergency facility locations and alternate transportation routes and map them out for classroom display. ▲

Lifelines and Critical Emergency Facilities

A. Critical Emergency Facilities

1. Medical facilities: hospitals, blood banks

2. Emergency response facilities: police stations, fire departments

3. Local office: emergency operations center

B. Lifeline Utility Systems

1. Transportation systems: highways, freeways, bridges, airports, railroads, docks and marinas

2. Communication systems: telephones, radio, television, newspapers

3. Water supply: dams and reservoirs, aqueducts, distribution lines

4. Waste water: treatment plants, holding tanks, collection lines, effluent lines

5. Electric power: transmission towers and lines, switching stations, power generating plants, local distribution lines

6. Natural gas: holding tanks, pipeline distribution lines

7. Petroleum fuels: refineries, tank farms, pipelines

Problem Areas

Name _____ Date: _____

1. If electricity is cut off, electric appliances will not function. Without refrigeration, large amounts of food and medicine will be liable to spoil. Gasoline pumps and auto service stations win be unable to pump gasoline. Without power, airport control towers will have to rely on backup systems. Airports may function at limited capacity or not at all.

2. If water distribution systems fail, the community will have no clean drinking water. Water may be limited or unavailable for fighting fires.

3. If hospitals are damaged, they will not be able to provide care and treatment for injuries and casualties. Even if a building's structure survives, its services may be limited by lack of water and electricity and lack of transportation. Modern hospitals rely heavily on technology.

4. Rupture of petroleum fuel or natural gas pipelines may cause serious fires in the community and outlying areas, as well as shortages of heat and power.

5. If sewer systems fail, lack of sanitation may cause epidemics, such as cholera.

A Chain of Disasters

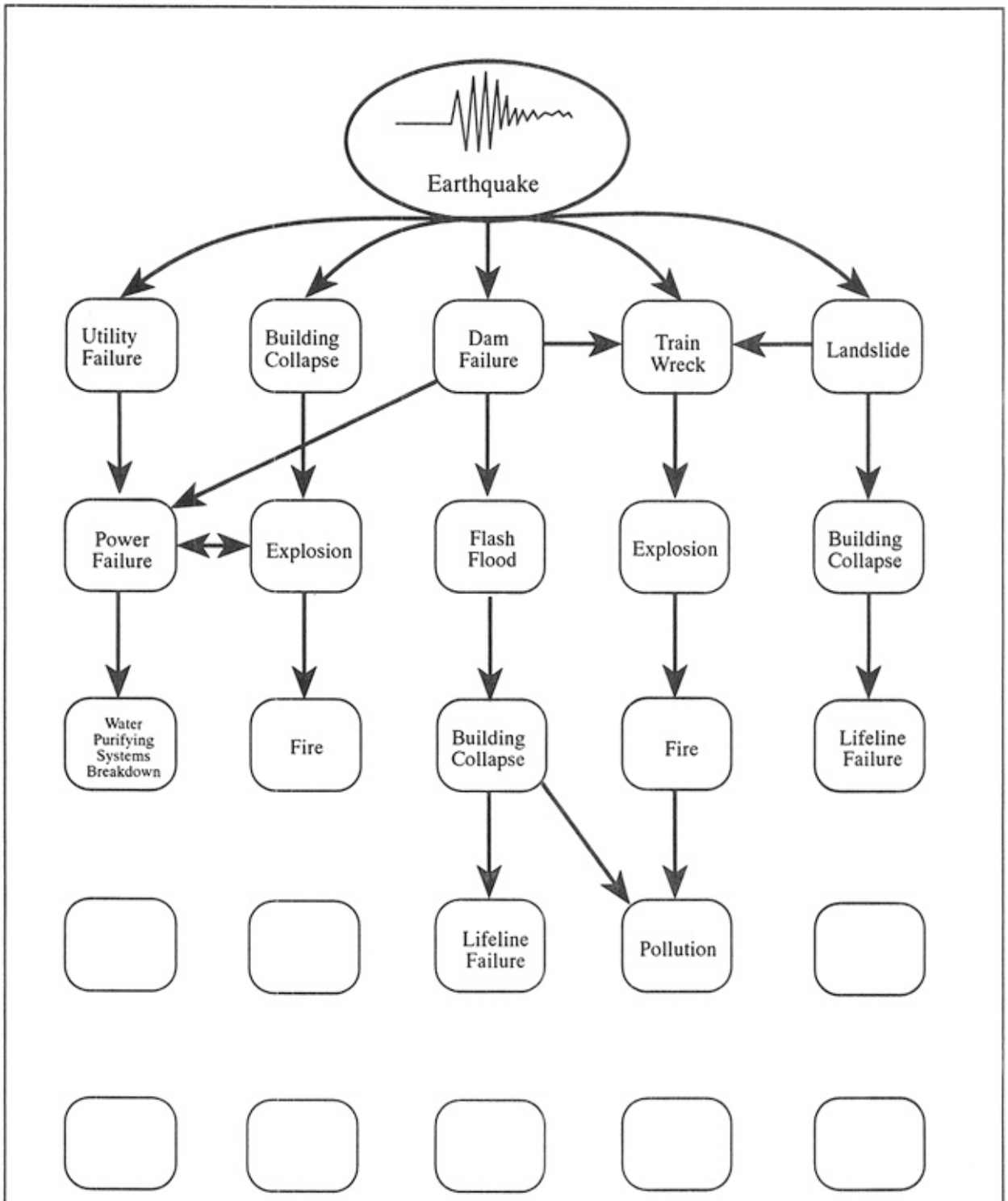

Students may fill in blanks and add lines.

Books

American Red Cross, Los Angeles Chapter. (1985). *The Emergency Survival Handbook.* In English and Spanish. A simple, practical, and easy-to-use guide; includes disaster planning, first aid, and survival skills.

Bay Area Regional Earthquake Preparedness Project (BAREPP). (1990). *An Ounce of Prevention: Strengthening Your Wood Frame House for Earthquake Safety.* Oakland, CA: CA-OES, 415-540-2713.

Federal Emergency Management Agency (FEMA). (September 1986). *"Family Earthquake Safety—Home Hazard Hunt and Earthquake Drill."* FEMA 113. Tips on safe places and danger zones in the house, earthquake drills, and what should be done before and after.

Federal Emergency Management Agency (FEMA). (1990). *"Guidebook for Developing a School Earthquake Safety Program."* FEMA 88. Washington DC: FEMA Publications, 500 C St., SW, Washington, DC 20472. This 50-page guide covers earthquake hazard identification; drills; response, communication, & shelter planning.

Federal Emergency Management Agency. (1993). *"Identification & Reduction of Nonstructural Hazards in Schools."* FEMA 241.

Federal Emergency Management Agency. (October *1990). Non-Technical Explanation of the NEHRP Recommended Provisions.* FEMA 99. Washington, DC: Intended to help individuals assess how earthquakes affect buildings & how enforcement of building codes helps to minimize loss.

Federal Emergency Management Agency. (July 1988). *Rapid Visual Screening of Buildings for Potential Seismic Hazards: A Handbook*. FEMA 154. Washington, DC: FEMA Describes the technique of rapid visual screening of buildings for potential seismic hazard.

Federal Emergency Management Agency. (1989). *Seismic Considerations: Elementary and Secondary Schools.* FEMA 149. Washington, DC: Building Seismic Safety Council. Covers the costs & benefits of applying seismic design in the construction of new school facilities. Explains how damage occurs to nonstructural components & building contents.

Helfant, David Benaroya. (1989). *Earthquake Safe: A Hazard Reduction Manual for Homes.* Berkeley, CA: Builders Booksource. A little book with reasonable explanations, detailed procedures, and plentiful illustrations.

Lagorio, Henry J. (1990). *Earthquakes.* New York: John Wiley and Sons, Inc. An architect's guide to nonstructural seismic hazards. Focuses on site planning, building design, urban planning and design, rehabilitation of existing buildings, and disaster recovery and reconstruction.

Matthys, Levy, and Salvadori, Mario. (1992). *Why Buildings Fall Down.* New York and London: W.W. Norton and Company.

Wesson, R.L., and Wallace, R.E. (1985). "Predicting the Next Great Earthquake in California." *Scientific American* 252, 2: 35-43.

Nonprint Media

Microstation, V. 5. A computer-assisted drafting program for student use. Order from Intergraph Corporation, Huntsville, AL, 1-800-345-4856. $150 with educational discount.

Reducing Nonstructural Earthquake Damage—A Practical Guide for Schools. Video (13:00 min). *Schools & Earthquakes—Building Schools to Withstand Earthquakes.* Video (14:27 min). Both available from FEMA.

Note: *Inclusion of materials in these resource listings does not constitute an endorsement by AGU or FEMA.*